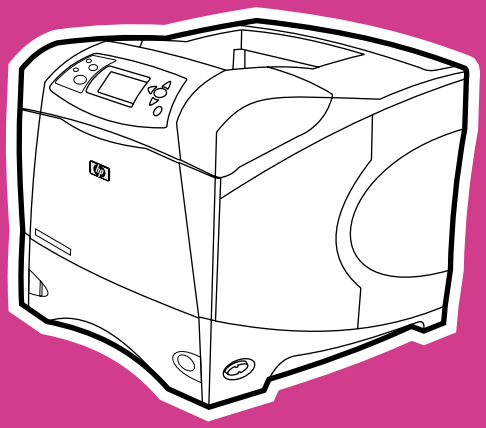

invent

service

hp LaserJet 4200

4200n • 4200tn
4200dtn • 4200dtns • 4200dtnsl

hp LaserJet 4300

4300n • 4300tn
4300dtn • 4300dtns • 4300dtnsl

Download Free Service Manual at http://printer1.blogspot.com

Download Free Service Manual at http://printer1.blogspot.com

hp LaserJet 4200/4300 Series Printers

Service

Download Free Service Manual at http://printer1.blogspot.com

Copyright Information

© Copyright Hewlett-Packard Company 2002

All Rights Reserved. Reproduction, adaptation, or translation without prior written permission is prohibited, except as allowed under the copyright laws.

Publication number: Q2431-90912

Edition 1, 08 2002

Warranty

The information contained in this document is subject to change without notice.

Hewlett-Packard makes no warranty of any kind with respect to this information. HEWLETT-PACKARD SPECIFICALLY DISCLAIMS THE IMPLIED WARRANTY OF MERCHANTABILITY AND FITNESS FOR A PARTICULAR PURPOSE.

Hewlett-Packard shall not be liable for any direct, indirect, incidental, consequential, or other damage alleged in connection with the furnishing or use of this information.

Trademark Credits

Adobe®, Acrobat®, PostScript™, and the Acrobat logo are either registered trademarks or trademarks of Adobe Systems Incorporated in the United States and/or other countries/regions.

Microsoft®, MS-DOS®, and Windows® are U.S. registered trademarks of Microsoft Corp.

Netscape™ is a U.S. trademark of Netscape Communications Corporation.

TrueType™ is a U.S. trademark of Apple Computer, Inc.

ENERGY STAR® is a U.S. registered service mark of the United States Environmental Protection Agency.

FCC regulations

This equipment has been tested and found to comply with the limits for a Class B digital device, pursuant to Part 15 of the FCC rules. These limits are designed to provide reasonable protection against harmful interference in a residential installation. This equipment generates, uses, and can radiate radio frequency energy. If this equipment is not installed and used in accordance with the instructions, it may cause harmful interference to radio communications. However, there is no guarantee that interference will not occur in a particular installation. If this equipment does cause harmful interference to radio or television reception, which can be determined by turning the equipment off and on, the user is encouraged to try to correct the interference by one or more of the following measures:

- Reorient or relocate the receiving antenna.
- Increase separation between equipment and receiver.
- Connect equipment to an outlet on a circuit different from that to which the receiver is located.
- Consult your dealer or an experienced radio/TV technician.

Any changes or modifications to the printer that are not expressly approved by HP could void the user's authority to operate this equipment.

Download Free Service Manual at http://printer1.blogspot.com

Table of contents

List of figures

List of tables

1 Printer description

Printer configurations 3
Model and serial numbers. 4
Site requirements 5
Printer specifications 5
Environmental specifications. 7
Paper specifications 9
Supported sizes and weights of media 10
Supported types of media 14
Labels 16
Overhead transparencies 16
Envelopes 17
Card stock and heavy paper 18
Types of print media to avoid 19
Safety information 20
Print cartridge and toner safety 20
Laser safety. 20
Laser safety statement (U.S.) 20
EMI statement (Korea) 21
VCCI statement (Japan) 21
Laser statement (Finland) 22
Regulatory information 23
FCC regulations. 23
Environmental product stewardship program 24
HP Printing Supplies Returns and Recycling program information 25
Declarations of Conformity 26
Declaration of Conformity 26
Canadian DOC regulations 26

2 Service approach

Service approach 28
Parts and supplies. 28
Ordering information 28
Related documentation and software 28
Support 28
Print-cartridge information 31
Hewlett-Packard limited warranty statement. 32
Limited warranty for toner cartridge life 33

Download Free Service Manual at http://printer1.blogspot.com

3 Printer operation

Using the control panel 36
Control-panel layout 36
Control-panel lights. 36
Control-panel buttons 37
Using the printer Help system 37
Settings and defaults 38
Setting the control-panel display language. 38
Control-panel menus 39
Overview. 39
Printing and changing control-panel menus 39
Retrieve Job menu 41
Information menu 41
Paper Handling menu. 42
Configure Device menu 44

4 Printer maintenance

Cleaning the printer and accessories 54
Cleaning the fuser 55
Running the cleaning page manually 56
Running the cleaning page automatically. 57
Cleaning spilled toner 57
Performing preventative maintenance 58
Resetting the maintenance-kit counter. 58
Expected life of components 59
Maintaining the stapler unit 60
Removing and replacing the stapler unit 60
Loading staples 62
Downloading a remote firmware update 63

5 Theory of operation

Introduction 67
Basic operation of the printer 67
General descriptions 69
DC controller PCA 69
Power supply 71
Laser/scanner assembly. 76
Paper pickup system 78
Paper pickup and feed block 79
Printing from tray 1 80
Printing from tray 2 82
Media skew prevention. 85
Fixing/delivery block 86
Printer jam detection. 87
Printing from the 500-sheet feeder 90
Printing from the 1,500-sheet feeder 92
Envelope feeder 95
Envelope feeder jam detection 97
Duplexer 98
Duplexer jam detection 100
Stacker and stapler/stacker 101
Stacker 103
Stacker jam detection 105
Stapler/stacker 106
Stapler/stacker jam detection 117

Download Free Service Manual at http://printer1.blogspot.com

Image-formation system 118
Electrostatic latent-image formation 120
Formatter system 127
PowerSave 127
Resolution Enhancement technology 127
EconoMode 128
Input/output 128
Printer memory 129
PJL overview 130
PML 130
Control panel 130

6 Removing and replacing parts

Removal and replacement strategy 133
Required tools 133
Before performing service 133
After completing service 133
Screws used in the printer 134
Parts-removal tree 135
Printer input tray, and cabinet wheel locks 136
User-replaceable parts 137
Print cartridge 137
Transfer roller 138
Tray 1 pickup roller 139
Tray 1 separation pad 140
Tray 2 feed rollers 141
Covers, tray 1, and the rear output bin 143
Accessory covers and the tray 2 extension door 143
Formatter cover 145
Top cover 146
Right-side cover 149
Left-side cover 151
Tray 1 152
Rear output bin 155
Control-panel display 156
Control-panel overlay 156
Control-panel assembly 157
Internal components 160
Firmware DIMM 160
Formatter assembly 161
Fuser 162
Output delivery assembly 163
Duplexing pendulum assembly 165
Tray 2 media-size sensor 167
Main cooling fan (left side) 168
Cooling fan (right side; HP LaserJet 4300 series printer only) 170
Laser/scanner assembly 173
Print-cartridge motor (HP LaserJet 4300 series printer only) 175
Main motor 177
Tray 2 lifter-drive assembly 179
DC controller PCA 181

Download Free Service Manual at http://printer1.blogspot.com

Paper-pickup assembly, ... 183
Main drive assembly 186
Power supply 188
Paper-feed belt assembly 191
Tray 1 paper-pickup assembly 192
Paper feed assembly 195
Registration assembly 198
Transfer assembly 200
Accessories 204
500-sheet feeder assembly 204
1,500-sheet feeder assembly 214

7 Troubleshooting

Introduction 230
Troubleshooting process 231
Initial troubleshooting checklist 232
Troubleshooting flowchart 234
Power-on checks 236
Troubleshooting tools 239
Information pages 239
Embedded Web server 243
Gaining access to the embedded Web server 243
Printer Status and Alerts software 245
Control-panel menus 247
Using control-panel menus 247
Resets submenu 247
Diagnostics menu 248
Service menu (service PIN codes) 249
Printer resets and power-on modes 251
Cold reset 251
NVRAM initialization 251
Hard-disk initialization 252
Power-on bypass 252
Test pages 254
Engine test page 254
Formatter test page 254
Interface troubleshooting 255
Communications checks 255
EIO troubleshooting 255
Display-message troubleshooting 257
Status messages 257
Warning messages 257
Error messages 257
Critical-error messages 257
Alphabetical printer messages 258
Numerical printer messages 274
Paper-path troubleshooting 295
Overview 295
Paper-jam recovery 296
Avoiding paper jams 297
Persistent jams 298
Media transport problems 304
Multiple pages feed 304
Paper is wrinkled or folded 304
Paper is skewed 305

Download Free Service Manual at http://printer1.blogspot.com

Image-formation troubleshooting 306
Print quality problems associated with media 306
Overhead transparency defects 307
Print quality problems associated with the environment 307
Print quality problems associated with jams 307
Image defects 308
Image defect tables 311
Repetitive defects troubleshooting 325
Troubleshooting the stacker and the stapler/stacker 326
Overview 326
Initial checks 326
Jam errors 327
Paper transport errors 330
Malfunction errors 330
Component errors 331
Printer component locations 332
Main printer parts. 332
Printer switches and sensors. 336
Printer motors and fans 337
Printer PCAs 338
Accessory component locations 339
500-sheet feeder main parts 339
500-sheet feeder switches, sensors, solenoids, and PCAs. 340
1,500-sheet feeder main parts. 341
1,500-sheet feeder switches, sensors, solenoids, and PCAs 343
Stapler/stacker stapler assembly. 344
Stacker and stapler/stacker switches and sensors 345
Stacker and stapler/stacker motors and solenoids 346
Stacker and stapler/stacker PCAs. 347
Printer and accessory wiring diagrams 348
DC controller block diagram 356
General timing diagrams 357

8 Parts and diagrams

Ordering parts, supplies, and getting support 362
Ordering information 362
Related documentation and software 362
Support 362
Accessories and supplies 364
How to use the parts lists and diagrams 367
Parts diagrams and lists 368
Alphabetical parts list. 405
Numerical parts list 409

Index

Download Free Service Manual at http://printer1.blogspot.com

Download Free Service Manual at http://printer1.blogspot.com

List of figures

Figure 1. Printer physical dimensions 6
Figure 2. Sample cleaning page 56
Figure 3. Replacing the stapler unit (1 of 2). 60
Figure 4. Replacing the stapler unit (2 of 2). 61
Figure 5. Loading staples in the staple cartridge (stapler/stacker only). 62
Figure 6. DC controller PCA block diagram. 69
Figure 7. Power supply block diagram. 71
Figure 8. Fuser components 71
Figure 9. Fuser over-temperature protection circuit block diagram 72
Figure 10. High-voltage circuit block diagram 73
Figure 11. Low-voltage circuit block diagram 74
Figure 12. Laser/scanner assembly. 76
Figure 13. Laser control circuit block diagram. 77
Figure 14. Printer paper pickup and feed block diagram. 78
Figure 15. Paper pickup/feed and fuser/delivery block diagram 79
Figure 16. Tray 1 timing diagrams. 80
Figure 17. Tray 1 pickup 81
Figure 18. Tray 2 timing diagrams. 82
Figure 19. Multiple feed prevention 84
Figure 20. Correcting skewed media pages 85
Figure 21. Paper pickup/feed and fuser/delivery block diagram 86
Figure 22. 500-sheet feeder I/O block diagram. 90
Figure 23. 500-sheet feeder pickup and feed diagram 91
Figure 24. 1,500-sheet feeder I/O block diagram 92
Figure 25. 1,500-sheet feeder pickup and feed diagram. 93
Figure 26. 1,500-sheet feeder lifting mechanism. 94
Figure 27. Envelope feeder I/O block diagram 95
Figure 28. Envelope feeder pickup and feed diagram. 96
Figure 29. Duplexer I/O block diagram 98
Figure 30. Duplexer pickup and reversing diagram. 99
Figure 31. Stacker and stapler/stacker paper path 101
Figure 32. Power-on sequence for the stacker and stapler/stacker 102
Figure 33. Stacker driver PCA block diagram 103
Figure 34. Stacker feed delivery diagram 104
Figure 35. Stapler/stacker driver PCA block diagram 106
Figure 36. Stapler/stacker motors, solenoids, and sensors block diagram 108
Figure 37. Staple mode feed and delivery diagram (1 of 6). 109
Figure 38. Staple mode feed and delivery diagram (2 of 6). 110
Figure 39. Staple mode feed and delivery diagram (3 of 6). 110
Figure 40. Staple mode feed and delivery diagram (4 of 6). 111
Figure 41. Staple mode feed and delivery diagram (5 of 6). 111
Figure 42. Staple mode feed and delivery diagram (6 of 6). 112
Figure 43. Staple mode timing diagram. 112
Figure 44. Stapler unit I/O block diagram 113
Figure 45. Stapler unit 114
Figure 46. Staple operation (1 of 3). 114
Figure 47. Staple operation (2 of 3). 115
Figure 48. Staple operation (3 of 3). 115
Figure 49. Staple level detection 116
Figure 50. Image formation block diagram 119
Figure 51. Primary charging of the photosensitive drum 120
Figure 52. Writing the image to the photosensitive drum 121
Figure 53. Developing the image. 122

Download Free Service Manual at http://printer1.blogspot.com

Figure 54. Transferring the image . . . 123
Figure 55. Fusing the image . . . 124
Figure 56. Cleaning the transfer charging roller and photosensitive drum . . . 125
Figure 57. Print cartridge memory chip . . . 126
Figure 58. Location of printer, input trays, and cabinet wheel locks . . . 136
Figure 59. Print cartridge (1 of 2) . . . 137
Figure 60. Print cartridge (2 of 2) . . . 137
Figure 61. Transfer roller . . . 138
Figure 62. Tray 1 pickup roller (1 of 2) . . . 139
Figure 63. Tray 1 pickup roller (2 of 2) . . . 139
Figure 64. Tray 1 separation pad . . . 140
Figure 65. Tray 2 feed rollers (1 of 4) . . . 141
Figure 66. Tray 2 feed rollers (2 of 4) . . . 141
Figure 67. Tray 2 feed rollers (3 of 4) . . . 142
Figure 68. Tray 2 feed rollers (4 of 4) . . . 142
Figure 69. Accessory covers (1 of 4) . . . 143
Figure 70. Accessory covers (2 of 4) . . . 143
Figure 71. Accessory covers (3 of 4) . . . 144
Figure 72. Accessory covers (4 of 4) . . . 144
Figure 73. Formatter cover . . . 145
Figure 74. Top cover (1 of 5) . . . 146
Figure 75. Top cover (2 of 5) . . . 146
Figure 76. Top cover (3 of 5) . . . 147
Figure 77. Top cover (4 of 5) . . . 147
Figure 78. Top cover (5 of 5) . . . 148
Figure 79. Right-side cover (1 of 4) . . . 149
Figure 80. Right-side cover (2 of 4) . . . 149
Figure 81. Right-side cover (3 of 4) . . . 150
Figure 82. Right-side cover (4 of 4) . . . 150
Figure 83. Left-side cover (1 of 2) . . . 151
Figure 84. Left-side cover (2 of 2) . . . 151
Figure 85. Tray 1 (1 of 6) . . . 152
Figure 86. Tray 1 (2 of 6) . . . 152
Figure 87. Tray 1 (3 of 6) . . . 153
Figure 88. Tray 1 (4 of 6) . . . 153
Figure 89. Tray 1 (5 of 6) . . . 154
Figure 90. Tray 1 (6 of 6) . . . 154
Figure 91. Rear output bin (1 of 2) . . . 155
Figure 92. Rear output bin (2 of 2) . . . 155
Figure 93. Control-panel overlay . . . 156
Figure 94. Control-panel assembly (1 of 4) . . . 157
Figure 95. Control-panel assembly (2 of 4) . . . 158
Figure 96. Control-panel assembly (3 of 4) . . . 158
Figure 97. Control-panel assembly (4 of 4) . . . 159
Figure 98. Firmware DIMM . . . 160
Figure 99. Formatter assembly . . . 161
Figure 100. Fuser (1 of 2) . . . 162
Figure 101. Fuser (2 of 2) . . . 162
Figure 102. Output delivery assembly (rear view, formatter side; 1 of 2) . . . 163
Figure 103. Output delivery assembly (2 of 2) . . . 164
Figure 104. Duplexing pendulum assembly (1 o 2) . . . 165
Figure 105. Duplexing pendulum assembly (2 of 2) . . . 166
Figure 106. Tray 2 media-size sensor (1 of 2) . . . 167
Figure 107. Tray 2 media-size sensor (2 of 2) . . . 167
Figure 108. Main cooling fan (1 of 4) . . . 168
Figure 109. Main cooling fan (2 of 4) . . . 168
Figure 110. Main cooling fan (3 of 4) . . . 169
Figure 111. Main cooling fan (4 of 4) . . . 169
Figure 112. Cooling fan (HP LaserJet 4300 series only; 1 of 5) . . . 170
Figure 113. Cooling fan (HP LaserJet 4300 series only; 2 of 5) . . . 170
Figure 114. Cooling fan (HP LaserJet 4300 series only; 3 of 5) . . . 171
Figure 115. Cooling fan (HP LaserJet 4300 series only; 4 of 5) . . . 171
Figure 116. Cooling fan (HP LaserJet 4300 series only; 5 of 5) . . . 172
Figure 117. Laser/scanner (1 of 4) . . . 173

Download Free Service Manual at http://printer1.blogspot.com

Figure 118. Laser/scanner (2 of 4) 173
Figure 119. Laser/scanner (3 of 4) 174
Figure 120. Laser/scanner (4 of 4) 174
Figure 121. Print-cartridge motor (HP LaserJet 4300 series only; 1 of 2) 175
Figure 122. Print-cartridge motor (HP Laserjet 4300 series only; 1 of 2) 176
Figure 123. Main motor (1 of 3) 177
Figure 124. Main motor (2 of 3) 177
Figure 125. Main motor (3 of 3) 178
Figure 126. Tray 2 lifter-drive assembly (1 of 2) 179
Figure 127. Tray 2 lifter-drive assembly (2 of 2) 180
Figure 128. DC controller PCA (1 of 3) 181
Figure 129. DC controller PCA (2 of 3) 182
Figure 130. DC controller PCA (3 of 3) 182
Figure 131. Paper-pickup assembly (1 of 5) 183
Figure 132. Paper-pickup assembly (2 of 5) 183
Figure 133. Paper-pickup assembly (3 of 5) 184
Figure 134. Paper-pickup assembly (4 of 5) 184
Figure 135. Paper-pickup assembly (5 of 5) 185
Figure 136. Tray 2 drive gear and shaft. 185
Figure 137. Main drive assembly (1 of 2) 186
Figure 138. Main drive assembly (2 of 2) 187
Figure 139. Power supply (right side; 1 of 5) 188
Figure 140. Power supply (2 of 5) 189
Figure 141. Power supply (left side; 3 of 5) 189
Figure 142. Power supply (tray 2 cavity; 4 of 5) 190
Figure 143. Power supply (5 of 5) 190
Figure 144. Paper-feed belt assembly (1 of 2) 191
Figure 145. Paper-feed belt assembly (2 of 2) 191
Figure 146. Tray 1 pickup assembly (1 of 4) 192
Figure 147. Tray 1 pickup assembly (2 of 4) 193
Figure 148. Tray 1 pickup assembly (3 of 4) 193
Figure 149. Tray 1 pickup assembly (4 of 4) 194
Figure 150. Correct position of the tray 1 pickup assembly grounding spring 194
Figure 151. Paper feed assembly (1 of 2) 195
Figure 152. Paper-feed assembly (2 of 2) 196
Figure 153. Correctly install the paper-feed assembly sensor flag 197
Figure 154. Registration assembly (1 of 3) 198
Figure 155. Registration assembly (2 of 3) 198
Figure 156. Registration assembly (3 of 3) 199
Figure 157. Transfer assembly (1 of 5) 200
Figure 158. Transfer assembly (left rear view; 2 of 5) 201
Figure 159. Transfer assembly (3 of 5) 202
Figure 160. Transfer assembly (4 of 5) 202
Figure 161. Transfer assembly (5 of 5) 203
Figure 162. Correct alignment of the left-side chassis. 203
Figure 163. 500-sheet feeder right-side cover (1 of 5) 204
Figure 164. 500-sheet feeder right-side cover (2 of 5) 205
Figure 165. 500-sheet feeder right-side cover (3 of 5) 205
Figure 166. 500-sheet feeder right-side cover (4 of 5) 206
Figure 167. 500-sheet feeder right-side cover (5 of 5) 206
Figure 168. 500-sheet feeder control PCA 207
Figure 169. 500-sheet feeder media-size sensor (1 of 2) 208
Figure 170. 500-sheet feeder media-size sensor (2 of 2) 208
Figure 171. 500-sheet feeder lifter-drive assembly (1 of 2) 209
Figure 172. 500-sheet feeder lifter-drive assembly (2 of 2) 209
Figure 173. 500-sheet feeder paper-pickup drive assembly (1 of 7) 210
Figure 174. 500-sheet feeder paper-pickup drive assembly (2 of 7) 210
Figure 175. 500-sheet feeder paper-pickup drive assembly (3 of 7) 211
Figure 176. 500-sheet feeder paper-pickup drive assembly (4 of 7) 211
Figure 177. 500-sheet feeder paper-pickup drive assembly (5 of 7) 212
Figure 178. 500-sheet feeder paper-pickup drive gear assembly (6 of 7) 212
Figure 179. 500-sheet feeder paper-pickup drive assembly (7 of 7) 213
Figure 180. 500-sheet feeder paper-pickup drive gear 213
Figure 181. 1,500-sheet feeder roller (1 of 2) 214

Download Free Service Manual at http://printer1.blogspot.com

Figure 182. 1,500-sheet feeder roller (2 of 2) 214
Figure 183. 1,500-sheet feeder door (1 of 3) 215
Figure 184. 1,500-sheet feeder door (2 of 3) 215
Figure 185. 1,500-sheet feeder door (3 of 3) 216
Figure 186. 1,500-sheet feeder rear cover (1 of 2) 217
Figure 187. 1,500-sheet feeder rear cover (2 of 2) 217
Figure 188. 1,500-sheet feeder right-side cover (1 of 3) 218
Figure 189. 1,500-sheet feeder right-side cover (2 of 3) 218
Figure 190. 1,500-sheet feeder right-side cover (3 of 3) 219
Figure 191. 1,500-sheet feeder control PCA (1 of 2) 220
Figure 192. 1,500-sheet feeder control PCA (2 of 2) 220
Figure 193. 1,500-sheet feeder media-size sensor 221
Figure 194. 1,500-sheet feeder lifter-drive assembly (1 of 4) 222
Figure 195. 1,500-sheet feeder lifter-drive assembly (2 of 4) 223
Figure 196. 1,500-sheet feeder lifter-drive assembly (3 of 4) 223
Figure 197. 1,500-sheet feeder lifter-drive assembly (4 of 4) 224
Figure 198. 1,500-sheet feeder paper-pickup drive assembly 225
Figure 199. Troubleshooting flowchart (1 of 2) 234
Figure 200. Troubleshooting flowchart (2 of 2) 235
Figure 201. Sample menu map page 240
Figure 202. Configuration page 241
Figure 203. Supplies status page 242
Figure 204. Engine test-page switch 254
Figure 205. Jetdirect page 256
Figure 206. Jam locations 295
Figure 207. Repetitive defect ruler 325
Figure 208. Stacker and stapler/stacker paper path 327
Figure 209. Location of main printer parts (1 of 4) 332
Figure 210. Location of main printer parts (2 of 4) 333
Figure 211. Location of main printer parts (3 of 4) 334
Figure 212. Location of main printer parts (4 of 4) 335
Figure 213. Location of printer switches and sensors 336
Figure 214. Location of printer motors and fans 337
Figure 215. Location of printer PCAs 338
Figure 216. Location of 500-sheet paper feeder main parts 339
Figure 217. Location of 500-sheet paper feeder switches, sensors, solenoids, and PCAs . . . 340
Figure 218. Location of 1,500-sheet paper feeder main parts (1 of 2) 341
Figure 219. Location of 1,500-sheet paper feeder main parts (2 of 2) 342
Figure 220. Location of 1,500-sheet switches, sensors, solenoids, and PCAs 343
Figure 221. Location of the stapler/stacker stapler unit 344
Figure 222. Location of the stacker and stapler/stacker switches and sensors 345
Figure 223. Location of the stacker and stapler/stacker motors and solenoids 346
Figure 224. Location of the stacker and stapler/stacker PCAs 347
Figure 225. HP LaserJet 4200 wiring diagram 348
Figure 226. HP LaserJet 4300 wiring diagram 349
Figure 227. 500-sheet feeder wiring diagram 350
Figure 228. 1,500-sheet feeder wiring diagram 351
Figure 229. Duplex accessory wiring diagram 352
Figure 230. Envelope feeder accessory wiring diagram 353
Figure 231. Stacker accessory wiring diagram 354
Figure 232. Stapler/stacker accessory wiring diagram 355
Figure 233. DC controller connectors diagram 356
Figure 234. HP LaserJet 4200 general timing diagram 357
Figure 235. HP LaserJet 4300 general timing diagram 358
Figure 236. Stapler/stacker timing diagram 359
Figure 237. External covers and panels 368
Figure 238. Main assemblies (1 of 3) 370
Figure 239. Main assemblies (2 of 3) 372
Figure 240. Main assemblies (3 of 3) 374
Figure 241. Right-side assemblies 376
Figure 242. Power supply and paper feed belt assembly 377
Figure 243. Main drive assembly 378
Figure 244. Paper-pickup assembly 379
Figure 245. Duplexing pendulum assembly 380

Download Free Service Manual at http://printer1.blogspot.com

Figure 246. Tray 2 lifter driver assembly 381
Figure 247. Paper pickup assembly 382
Figure 248. Paper-feed assembly 383
Figure 249. Registration assembly 384
Figure 250. Tray 1 assembly 385
Figure 251. Output delivery assembly 386
Figure 252. Transfer assembly 387
Figure 253. Fuser 388
Figure 254. 500-sheet feeder external covers and panels 390
Figure 255. 500-sheet feeder main assemblies (1 of 2) 391
Figure 256. 500-sheet feeder main assemblies (2 of 2) 392
Figure 257. 500-sheet feeder paper-pickup drive assembly 394
Figure 258. 500-sheet feeder lifter driver assembly 395
Figure 259. 500-sheet tray. 396
Figure 260. 1500-sheet feeder external covers and panels 397
Figure 261. 1,500-sheet feeder main assemblies 398
Figure 262. 1,500-sheet feeder paper-pickup drive assembly. 400
Figure 263. 1,500-sheet feeder lifter-drive assembly 401
Figure 264. 1,500-sheet feeder paper-pickup assembly 402
Figure 265. Stacker and stapler/stacker 403
Figure 266. Stacker and stapler/stacker 404

Download Free Service Manual at http://printer1.blogspot.com

Download Free Service Manual at http://printer1.blogspot.com

List of tables

Table 1. Product configurations . . . 3
Table 2. Printer weights . . . 7
Table 3. Power consumption . . . 7
Table 4. Circuit requirements . . . 8
Table 5. Acoustic ratings . . . 8
Table 6. General specifications . . . 8
Table 7. Tray 1 Media specifications . . . 10
Table 8. Tray 2 and 500-sheet feeder media specifications . . . 11
Table 9. 1,500-sheet feeder media specifications . . . 11
Table 10. Duplex accessory media specifications . . . 12
Table 11. Envelope feeder accessory . . . 12
Table 12. Stacker or stapler/stacker accessory . . . 13
Table 13. Paper weight equivalents . . . 15
Table 14. Technical support websites . . . 28
Table 15. Control-panel lights . . . 36
Table 16. Control-panel buttons . . . 37
Table 17. Settings and defaults . . . 38
Table 18. Retrieve job menu . . . 41
Table 19. Information menu . . . 41
Table 20. Paper-handling menu . . . 42
Table 21. Printing submenu . . . 44
Table 22. PCL submenu . . . 45
Table 23. Print quality submenu . . . 46
Table 24. System setup submenu . . . 49
Table 25. Stapler stacker submenu . . . 51
Table 26. I/O submenu . . . 52
Table 27. Cleaning the printer . . . 55
Table 28. Maintenance kit part numbers . . . 58
Table 29. Component life expectancies and part numbers . . . 59
Table 30. Basic printer operating sequence . . . 67
Table 31. Printer fans and motors . . . 70
Table 32. Tray 2 and 500-sheet feeder media size switch settings . . . 83
Table 33. 1,500-sheet feeder media size switch settings . . . 83
Table 34. Stacker components . . . 104
Table 35. Stapler/stacker components . . . 107
Table 36. Common fasteners used in this product . . . 134
Table 37. Initial troubleshooting checklist . . . 232
Table 38. Power-on defect or blank display . . . 237
Table 39. Resets submenu . . . 247
Table 40. Diagnostics menu . . . 248
Table 41. Alphabetical printer messages . . . 258
Table 42. Numerical printer messages . . . 274
Table 43. Common causes of paper jams . . . 297
Table 44. Causes of tray 1 jams . . . 301
Table 45. Causes of tray 2 jams . . . 301
Table 46. Causes of tray 3 and or tray 4 jams . . . 302
Table 47. Causes of paper-path jams . . . 303
Table 48. Causes of duplex path jams . . . 303
Table 49. Causes for multiple pages feeding . . . 304
Table 50. Causes for wrinkled or folded paper (part one, paper path entrance) . . . 304
Table 51. Causes for wrinkled or folded paper (part two, paper path exit) . . . 304
Table 52. Causes for skewed paper . . . 305
Table 53. Image quality checks . . . 308

Download Free Service Manual at http://printer1.blogspot.com

Table 54. Print quality image defects 311
Table 55. Light print (partial page) 313
Table 56. Light print (entire page) 313
Table 57. Specks or dots 314
Table 58. Drop outs and character voids 315
Table 59. Lines 316
Table 60. Grey background 317
Table 61. Loose toner or toner smear 317
Table 62. Repeating defects and repeating images 318
Table 63. Distorted images 318
Table 64. Skew 319
Table 65. Curl or wave 319
Table 66. Creases 319
Table 67. White lines 320
Table 68. Smudged lines (either direction) 320
Table 69. White spots on black 321
Table 70. Scattered lines 321
Table 71. Blurred print 321
Table 72. Black page 322
Table 73. Blank (or white) page 323
Table 74. Dark print 324
Table 75. Repetitive defects 325
Table 76. Printer connection area jam troubleshooting 328
Table 77. Delivery area jam troubleshooting 329
Table 78. Paper transport error troubleshooting 330
Table 79. Malfunction error troubleshooting 330
Table 80. Component error troubleshooting 331
Table 81. Technical support websites 362
Table 82. Paper-handling accessories 364
Table 83. Memory, fonts, and mass storage 365
Table 84. Cables and interfaces 365
Table 85. Printer maintenance kit and exchange parts 366
Table 86. Documentation 367
Table 87. External covers and panels 369
Table 88. Main assemblies (1 of 3) 371
Table 89. Main assemblies (2 of 3) 373
Table 90. Main assemblies (3 of 3) 375
Table 91. Right-side assemblies 376
Table 92. Power supply and paper-feed belt assembly 377
Table 93. Main drive assembly 378
Table 94. Paper-pickup assembly 379
Table 95. Duplexing pendulum assembly 380
Table 96. Tray 2 lifter driver assembly 381
Table 97. Paper pickup assembly 382
Table 98. Paper-feed assembly 383
Table 99. Registration assembly 384
Table 100. Tray 1 assembly 385
Table 101. Output delivery assembly 386
Table 102. Transfer assembly 387
Table 103. Fuser 389
Table 104. 500-sheet feeder external covers and panels 390
Table 105. 500-sheet feeder main assemblies (1 of 2) 391
Table 106. 500-sheet feeder main assemblies (2 of 2) 393
Table 107. 500-sheet feeder paper-pickup drive assembly 394
Table 108. 500-sheet feeder lifter driver assembly 395
Table 109. 500-sheet tray 396
Table 110. 1500-sheet feeder external covers and panels 397
Table 111. 1,500-sheet feeder main assemblies 399
Table 112. 1,500-sheet feeder paper-pickup drive assembly 400
Table 113. 1,500-sheet feeder lifter-drive assembly 401
Table 114. 1,500-sheet feeder paper-pickup assembly 402

Download Free Service Manual at http://printer1.blogspot.com

Table 115. Stacker and stapler/stacker 403
Table 116. Stacker and stapler/stacker 404
Table 117. Alphabetical pars list 405
Table 118. Numerical pars list 409

Download Free Service Manual at http://printer1.blogspot.com

Download Free Service Manual at http://printer1.blogspot.com

1 Printer description

Contents

Printer configurations . . . 3
Model and serial numbers . . . 4
Site requirements . . . 5
Printer specifications . . . 5
Physical dimensions . . . 6
Printer weights (without print cartridge) . . . 7
Environmental specifications . . . 7
Paper specifications . . . 9
Supported sizes and weights of media . . . 10
Supported types of media . . . 14
Guidelines for using paper . . . 14
Paper weight equivalence table . . . 15
Labels . . . 16
Overhead transparencies . . . 16
Envelopes . . . 17
Envelope construction . . . 17
Envelopes with double-side-seams . . . 17
Envelopes with adhesive strips or flaps . . . 17
Envelope margins . . . 18
Envelope storage . . . 18
Card stock and heavy paper . . . 18
Card stock construction . . . 18
Card stock guidelines . . . 18
Types of print media to avoid . . . 19
Safety information . . . 20
Print cartridge and toner safety . . . 20
Handling and storage . . . 20
First aid measures . . . 20
Clothing contact . . . 20
Additional information . . . 20
Laser safety . . . 20
Laser safety statement (U.S.) . . . 20
EMI statement (Korea) . . . 21
VCCI statement (Japan) . . . 21
Laser statement (Finland) . . . 22
Regulatory information . . . 23
FCC regulations . . . 23

Download Free Service Manual at http://printer1.blogspot.com

Environmental product stewardship program 24
Protecting the environment 24
Energy consumption 24
Toner consumption 24
Paper use 24
Plastics 24
HP LaserJet printing supplies 24
Paper 24
Material restrictions 25
For more information 25
HP Printing Supplies Returns and Recycling program information . . 25
U.S. returns 25
Non-U.S. returns 25
Declarations of Conformity 26
Canadian DOC regulations 26

Download Free Service Manual at http://printer1.blogspot.com

Printer configurations

The HP LaserJet 4200/4300 series printer is available in a total of 12 models.

Table 1. Product configurations

	HP LaserJet 4200 series	HP LaserJet 4300 series
Base model 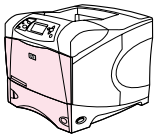	• **Q2425A** • 48 MB RAM, expandable to 416 MB • one 100-sheet tray and one 500-sheet tray	• **Q2431A** • 64 MB RAM, expandable to 416 MB • one 100-sheet tray and one 500-sheet tray
n model 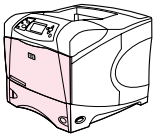	• **Q2426A** • 64 MB RAM, expandable to 416 MB • one 100-sheet tray and one 500-sheet tray • HP Jetdirect 10/100Base-TX print server card for network connection	• **Q2432A** • 80 MB RAM, expandable to 416 MB • one 100-sheet tray and one 500-sheet tray • HP Jetdirect 10/100Base-TX print server card for network connection
tn model 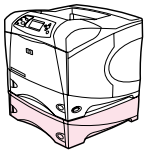	• **Q2427A** • 64 MB RAM, expandable to 416 MB • one 100-sheet tray and two 500-sheet trays • HP Jetdirect 10/100Base-TX print server card for network connection friend	• **Q2433A** • 80 MB RAM, expandable to 416 MB • one 100-sheet tray and two 500-sheet trays • HP Jetdirect 10/100Base-TX print server card for network connection
dtn model 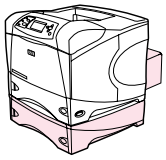	• **Q2428A** • 64 MB RAM, expandable to 416 MB • one 100-sheet tray and two 500-sheet trays • HP Jetdirect 10/100Base-TX print server card for network connection • duplexer for automatic two-sided printing	• **Q2434A** • 80 MB RAM, expandable to 416 MB • one 100-sheet tray and two 500-sheet trays • HP Jetdirect 10/100Base-TX print server card for network connection • duplexer for automatic two-sided printing
dtns model 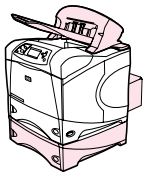	• **Q2446A** • 64 MB RAM, expandable to 416 MB • one 100-sheet tray and two 500-sheet trays • HP Jetdirect 10/100Base-TX print server card for network connection • duplexer for automatic two-sided printing • 500-sheet stacker output accessory	• **Q2435A** • 80 MB RAM, expandable to 416 MB • one 100-sheet tray and two 500-sheet trays • HP Jetdirect 10/100Base-TX print server card for network connection • duplexer for automatic two-sided printing • 500-sheet stacker output accessory
dtnsL model 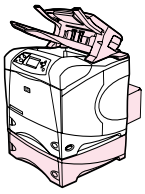	• **Q2447A** • 64 MB RAM, expandable to 416 MB • one 100-sheet tray and two 500-sheet trays • HP Jetdirect 10/100Base-TX print server card for network connection • duplexer for automatic two-sided printing • 500-sheet stapler/stacker output accessory	• **Q2448A** • 80 MB RAM, expandable to 416 MB • one 100-sheet tray and two 500-sheet trays • HP Jetdirect 10/100Base-TX print server card for network connection • duplexer for automatic two-sided printing • 500-sheet stapler/stacker output accessory

Download Free Service Manual at http://printer1.blogspot.com

Model and serial numbers

The model number and printer serial number are listed on an identification label located under the top cover on the right side of the printer. The model number is alphanumeric, such as Q2431A for the HP LaserJet 4200/4300 products.

The serial number contains information about the country/region of origin, the revision level, the production code, and the production number of the printer. An example of a serial number is USBB123456.

The label also contains power rating and regulatory information as shown in figure 1.

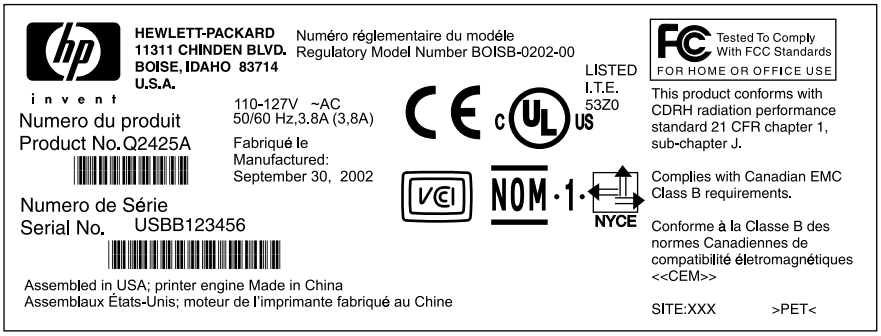

Figure 1. **Sample model and serial number label**

Download Free Service Manual at http://printer1.blogspot.com

Site requirements

The following environmental specifications must be maintained to ensure the correct operation of the printer. Consider the following points before installing the printer:

- Install in a well-ventilated, dust-free area.
- Install on a hard, flat, continuous surface, with all four printer feet level. Do not install on carpet or other soft surfaces.
- Make sure that adequate power is supplied. Printer circuit requirements are listed in table 4 on page 8. Uninterruptable power supplies (UPSs) are not recommended.
- Install where temperature and humidity are stable, away from water sources, humidifiers, air conditioners, refrigerators, or other major appliances. See table 6 on page 8 for temperature and humidity ranges.
- Install away from direct sunlight, open flames, or ammonia fumes. If the printer is placed near a window, make sure the window has a curtain or blind to block direct sunlight.
- Install with enough space around the printer for access and ventilation.
- Install away from the direct flow of exhaust from air ventilation systems.

Printer specifications

Install the printer with enough space around it to open trays and bins, install toner, and perform maintenance. The printer needs 101 mm (4 inches) of ventilation space on the left side (fan side) and at the rear of the printer.

Download Free Service Manual at http://printer1.blogspot.com

Physical dimensions

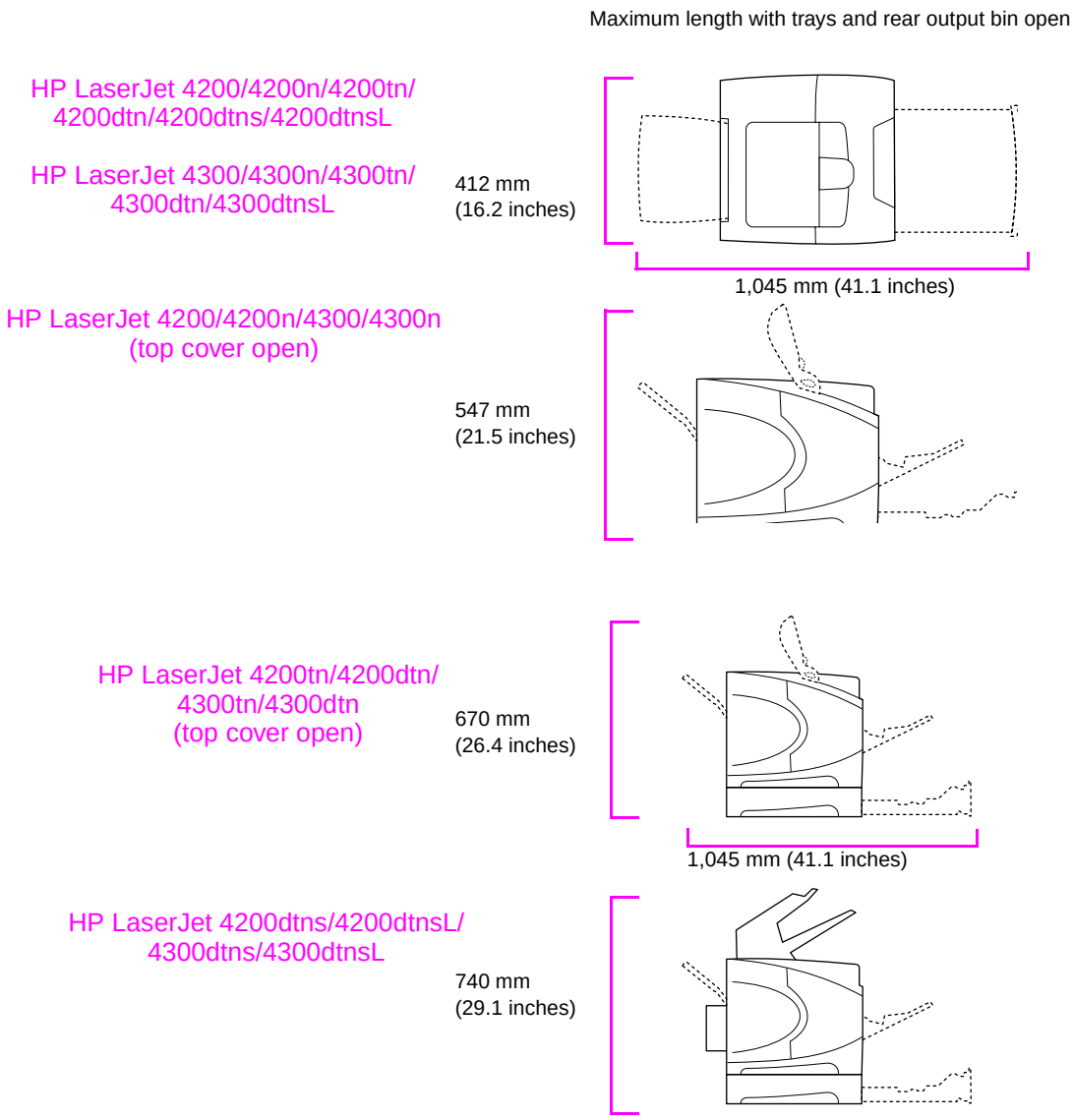

Figure 1. **Printer physical dimensions**

Download Free Service Manual at http://printer1.blogspot.com

Printer weights (without print cartridge)

Table 2. Printer weights

HP LaserJet 4200/4200n printers	20 kg (45 lb)
HP LaserJet 4200tn printer	27 kg (60 lb)
HP LaserJet 4200dtn printer	30 kg (66 lb)
HP LaserJet 4200dtns printer	33 kg (73 lb)
HP LaserJet 4200dtnsL printer	34 kg (76 lb)
HP LaserJet 4300/4300n printers	21 kg (46 lb)
HP LaserJet 4300tn printer	28 kg (61 lb)
HP LaserJet 4300dtn printer	30 kg (66 lb)
HP LaserJet 4300dtns printer	33 kg (73 lb)
HP LaserJet 4300dtnsL printer	34 kg (76 lb)

Environmental specifications

CAUTION Power requirements are based on the country/region in which the printer is sold. Do not convert operating voltages. Converting operating voltages can damage the printer and void the product warranty.

Table 3. Power consumption

Printer model	Power consumption (average, in watts)[1]			
	Printing	Standby	PowerSave[2]	Off
HP LaserJet 4200	580 (35 ppm)	21	20.4	.07
HP LaserJet 4200n	580 (35 ppm)	22	20.7	.07
HP LaserJet 4200tn	580 (35 ppm)	23	21.8	.07
HP LaserJet 4200dtn	580 (35 ppm)	24	24.2	.07
HP LaserJet 4200dtns	580 (35 ppm)	26	24.1	.07
HP LaserJet 4200dtnsL	580 (35 ppm)	26	at least 24.2	.07
HP LaserJet 4300	685 (45 ppm)	21	21.0	.07
HP LaserJet 4300n	685 (45 ppm)	23	22.7	.07
HP LaserJet 4300tn	685 (45 ppm)	24	22.6	.07
HP LaserJet 4300dtn	685 (45 ppm)	26	24.0	.07
HP LaserJet 4300dtns	685 (45 ppm)	26	24.5	.07
HP LaserJet 4300dtnsL	685 (45 ppm)	27	at least 24.9	.07

1. Values are subject to change. See http://www.hp.com/support/lj4200 or http://www.hp.com/support/lj4300 for current information.
2. PowerSave default activation time is 30 minutes.

Download Free Service Manual at http://printer1.blogspot.com

Table 4. Circuit requirements

HP LaserJet 4200 series HP LaserJet 4300 series	110-volt models	220-volt models
Power requirements	110 to 127 volt s(+/-10 percent) 50/60 Hz (+/-2 Hz)	220 to 240 volts (+/-10 percent) 50/60 Hz (+/-2 Hz)
Rated short-term current for a typical product	8.2 amps	3.3 amps

Table 5. Acoustic ratings

Sound power level	Declared per ISO 9296
Printing, 35 ppm (HP LaserJet 4200 series)	L_{WAd}= 6.8 bels (A)
Printing, 45 ppm (HP LaserJet 4300 series)	L_{WAd}= 7.0 bels (A)
PowerSave	L_{WAd}= 4.0 bels (A)
SPL-Bystander position	**Declared per ISO 9296**
Printing, 35 ppm (HP LaserJet 4200 series)	L_{pAm}= 54 dB (A)
Printing, 45 ppm (HP LaserJet 4300 series)	L_{pAm}= 56 dB (A)
PowerSave	L_{pAm}= 27 dB (A)

Values are subject to change. See http://www.hp.com/support/lj4200 or http://www.hp.com/support/lj4300 for current information.

Table 6. General specifications

Description	HP LaserJet 4200	HP LaserJet 4300
Operating temperature	10° to 32° C (50° to 90° F)	10° to 32° C (50° to 90° F)
Relative humidity	20 percent to 80 percent	20 percent to 80 percent
Speed, in pages per minute (ppm)	Up to 35 ppm, letter-size paper Up to 33 ppm, A4-size paper	Up to 45 ppm, letter-size paper Up to 43 ppm, A4-size paper
Expandable memory	Up to 416 MB total, combining standard and accessory memory DIMMs	Up to 416 MB total, combining standard and accessory memory DIMMs

Download Free Service Manual at http://printer1.blogspot.com

Paper specifications

HP LaserJet 4200/4300 printers produce excellent print quality. This printer accepts a variety of print media, such as cut-sheet paper (including recycled paper), envelopes, labels, transparencies, and custom-size paper. Paper properties such as weight, grain, and moisture content are important factors that affect printer performance and output quality.

The printer can use a variety of paper and other print media in accordance with the following guidelines. Media that does not meet these guidelines can cause the following problems:

- poor print quality
- more jams
- premature wear on the printer, requiring repair

Note For best results, use only high-quality media, such as HP-brand paper and print media. Hewlett-Packard Company cannot recommend the use of other brands. Because they are not HP products, HP cannot influence or control their quality. To order HP quality papers and supplies, go to http://www.hp.com or visit your local HP authorized reseller.

It is possible for paper to meet all of the guidelines specified here and still not produce satisfactory results. This might be the result of improper handling, unacceptable temperature and humidity levels, or other variables over which Hewlett-Packard has no control.

Before purchasing a large quantity of paper, make sure that it meets the requirements specified here and in the *HP LaserJet Printer Family Print Media Guide.* Go to http://www.hp.com/support/ljpaperguide for more information. Always test paper before purchasing a large quantity.

CAUTION Using media that is outside HP specifications can cause problems for the printer, requiring repair. This repair is not covered by the Hewlett-Packard warranty or service agreements.

This section provides information about types of media:

- Supported sizes and weights of media
- Supported types of paper
- Guidelines for using paper
- Paper weight equivalents
- Labels
- Overhead transparencies
- Envelopes
- Card stock and heavy paper

Download Free Service Manual at http://printer1.blogspot.com

Supported sizes and weights of media

Note The printer always prints at half speed from tray 1. The printer also prints at half speed from all other trays when printing on media sizes other than letter, legal, and A4.

Table 7. Tray 1 Media specifications

Size	Dimensions[1]	Weight	Capacity[2]
Letter	216 by 279 mm (8.5 by 11 inches)	60 to 200 g/m^2 (16 to 53 lb)	100 sheets of 75-g/m^2 (20-lb) paper
A4	210 by 297 mm (8.3 by 11.7 inches)		
Legal	216 by 356 mm (8.5 by 14 inches)		
Executive	184 by 267 mm (7.3 by 10.5 inches)		
A5	148 by 210 mm (5.8 by 8.3 inches)		
B5 (ISO)	176 by 250 mm (6.9 by 9.8 inches)		
B5 (JIS)	182 by 257 mm (7.2 by 10.1 inches)		
Executive (JIS)	216 by 330 mm (8.5 by 13 inches)		
Double postcard (JIS)	148 by 200 mm (5.8 by 7.9 inches)		
16K	197 by 273 mm (7.8 by 10.8 inches)		
Custom[3]	Minimum: 76 by 127 mm (3 by 5 inches) Maximum: 216 by 356 mm (8.5 by 14 inches)		
Envelope Commercial #10	105 by 241 mm (4.1 by 9.5 inches)	75 to 105 g/m^2 (20 to 28 lb)	10 envelopes
Envelope DL ISO	110 by 220 mm (4.3 by 8.7 inches)		
Envelope C5 ISO	162 by 229 mm (6.4 by 9.0 inches)		
Envelope B5 ISO	176 by 250 mm (6.9 by 9.8 inches)		
Envelope Monarch #7-3/4	98 by 191 mm (3.9 by 7.5 inches)		
Transparencies (for monochrome LaserJet printers only)	Minimum: 76 by 127 mm (3 by 5 inches) Maximum: 216 by 356 mm (8.5 by 14 inches)	Thickness: 0.099 to 0.114 mm (0.0039 to 0.0045 inch)	50 transparencies

Download Free Service Manual at http://printer1.blogspot.com

Table 7. Tray 1 Media specifications (continued)

Labels	Minimum: 76 by 127 mm (3 by 5 inches) Maximum: 216 by 356 mm (8.5 by 14 inches)	Thickness: 0.127 to 0.229 mm (0.005 to 0.009 inch)	50 labels

1. The printer supports a wide range of sizes. Check the printer software for supported sizes.
2. Capacity can vary depending on paper weight and thickness, as well as environmental conditions.
3. All sizes can be stacked, but only letter, legal, and A4 can be stapled.

Table 8. Tray 2 and 500-sheet feeder media specifications

Size	Dimensions[1]	Weight	Capacity[2]
Letter	216 by 279 mm (8.5 by 11 inches)	60 to 120 g/m^2 (16 to 32 lb)	500 sheets of 75-g/m^2 (20-lb) paper
A4	210 by 297 mm (8.3 by 11.7 inches)		
Executive	184 by 267 mm (7.3 by 10.5 inches)		
Legal	216 by 356 mm (8.5 by 14 inches)		
B5 (JIS)	182 by 257 mm (7.2 by 10.1 inch)		
A5	148 by 210 mm (5.8 by 8.3 inches)		
Custom[3]	Minimum: 148 by 210 mm (5.8 by 8.3 inch) Maximum: 216 by 356 mm (8.5 by 14 inches)		

1. The printer supports a wide range of sizes. Check the printer software for supported sizes.
2. Capacity can vary depending on paper weight and thickness, as well as environmental conditions.
3. All sizes can be stacked, but only letter, legal, and A4 can be stapled.

Table 9. 1,500-sheet feeder media specifications

Size	Dimensions	Weight	Capacity[1]
Letter	216 by 279 mm (8.5 by 11 inches)	60 to 120 g/m^2 (16 to 32 lb)	1,500 sheets of 75-g/m^2 (20-lb) paper
A4	210 by 297 mm (8.3 by 11.7 inches)		
Legal	216 by 356 mm (8.5 by 14 inches)		

1. Capacity can vary depending on paper weight and thickness, as well as environmental conditions.

Download Free Service Manual at http://printer1.blogspot.com

Table 10. Duplex accessory media specifications

Size	Dimensions	Weight
Letter	216 by 279 mm (8.5 by 11 inches)	60 to 120 g/m^2 (16 to 32 lb)
A4	210 by 297 mm (8.3 by 11.7 inches)	
Executive	184 by 267 mm (7.3 by 10.5 inches)	
Legal	216 by 356 mm (8.5 by 14 inches)	
B5 (JIS)	182 by 257 mm (7.2 by 10.1 inches)	
A5	148 by 210 mm (5.8 by 8.3 inches)	

Table 11. Envelope feeder accessory

Size	Dimensions	Weight	Capacity
Monarch #7-3/4	98 by 191 mm (3.9 by 7.5 inches)	75 to 105 g/m^2 (20 to 28 lb)	75 envelopes
Commercial#10	105 by 241 mm (4.1 by 9.5 inches)		
DL ISO	110 by 220 mm (4.3 by 8.7 inches)		
C5 ISO	162 by 229 mm (6.4 by 9.0 inches)		
B5 ISO	176 by 250 mm (6.9 by 9.8 inches)		

Download Free Service Manual at http://printer1.blogspot.com

Table 12. Stacker or stapler/stacker accessory

Size	Dimensions[1]	Weight	Capacity[2]
Stacker or stacker part of stapler/stacker only			
Letter	216 by 279 mm (8.5 by 11 inches)	60 to 120 g/m^2 (16 to 32 lb)	500 sheets of 75-g/m^2 (20-lb) paper
A4	210 by 297 mm (8.3 by 11.7 inches)		
Executive	184 by 267 mm (7.3 by 10.5 inches)		
Legal	216 by 356 mm (8.5 by 14 inches)		
B5 (JIS)	182 by 257 mm (7.2 by 10.1 inches)		
A5	148 by 210 mm (5.8 by 8.3 inches)		
Custom[3]	Minimum: 148 by 210 mm (5.8 by 8.3 inches) Maximum: 216 by 356 mm (8.5 by 14 inches)		
Stapler part of stapler/stacker only			
Letter	216 by 279 mm (8.5 by 11 inches)	60 to 120 g/m^2 (16 to 32 lb)	15 sheets of 75-g/m^2 (20-lb) paper
A4	210 by 297 mm (8.3 by 11.7 inches)		
Legal	216 by 356 mm (8.5 by 14 inches)		

1. The printer supports a wide range of sizes. Check the printer software for supported sizes.
2. Capacity can vary depending on paper weight and thickness, as well as environmental conditions.
3. All sizes can be stacked, but only letter, legal, and A4 can be stapled.

Note The stacker and stapler/stacker do not support card stock.

Do not use the stapler/stacker to staple labels, card stock, or transparencies.

Download Free Service Manual at http://printer1.blogspot.com

Supported types of media

The printer supports the following types of paper and other print media:

- plain
- letterhead
- prepunched
- bond
- color
- rough
- preprinted
- transparency
- labels
- recycled
- card stock
- envelopes

Guidelines for using paper

For best results, use conventional 75- to 90-g/m^2 (20- to 24-lb) paper. Make sure that the paper is of good quality, and free of cuts, nicks, tears, spots, loose particles, dust, wrinkles, voids, and curled or bent edges. If you are unsure what type of paper you are loading (such as bond or recycled), check the label on the package of paper.

CAUTION Some paper might cause print-quality problems, jamming, or damage to the printer.

Symptom	Problem with paper	Solution
Poor print quality or toner adhesion.	• Too moist, too rough, too smooth, or embossed. • Ragged edges. • Faulty paper lot.	• Try another kind of paper, between 100 to 250 Sheffield, 4 to 6 percent moisture content. • Change the fuser mode. See "Print Quality submenu" on page 46.
Dropouts, jamming, curl.	• Stored improperly.	• Store paper flat in its moisture-proof wrapping.
Increased gray background shading.	• Too heavy.	• Use lighter paper. • Use a higher toner density setting. See "Print Quality submenu" on page 46.
	• Too smooth.	• Use less smooth paper.
Excessive curl. Problems with feeding.	• Too moist, wrong grain direction, or short-grain construction.	• Use the rear output bin. • Turn the paper stack over in the tray. • Use long-grain paper. • Store paper in a drier environment. • Change the fuser mode. See "Print Quality submenu" on page 46.

Note Do not use letterhead paper that is printed with low-temperature inks, such as those used in some types of thermography.

Do not use raised letterhead.

The printer uses heat and pressure to fuse toner to the paper. Make sure that any colored paper or preprinted forms use inks that are compatible with the printer's temperature of 230° C (446° F) for 0.05 second.

Avoid using paper that has been damaged from being previously used in a printer or copier. (Do not print on both sides of envelopes, transparencies, or labels.)

Download Free Service Manual at http://printer1.blogspot.com

Paper weight equivalence table

Use the following table to determine approximate equivalent points in weight specifications other than U.S. bond weight. For example, to determine the equivalent of 20-lb U.S. bond weight paper in U.S. cover weight, locate the bond weight (in row 3, second column) and scan across the row to the cover weight (in the fourth column). The equivalent is 28 lb.

The shaded areas indicate a standard weight for that grade.

Table 13. Paper weight equivalents

U.S. postcard[1] thickness (mm)	U.S. bond weight (lb)	U.S. text/book weight[2] (lb)	U.S. cover weight (lb)	U.S. Bristol weight (lb)	U.S. index weight (lb)	U.S. tag weight (lb)	Metric weight (g/m^2)
	16	41	22	27	33	37	60
	17	43	24	29	35	39	64
	20	50[2]	28	34	42	46	75
	21	54	30	36	44	49	80
	24	60[b]	33	41	50	55	90
	27	68	37	45	55	61	100
	28	70[b]	39	49	58	65	105
	29	74	41	50	61	68	110
	32	80[b]	44	55	67	74	120
	36	90	50	62	75	83	135
0.18	39	100	55	67	82	91	148
	40	101	55	68	83	92	150
0.20	43	110	60	74	90	100	163
	45	115	63	77	94	104	170
0.23	47	119	65	80	97	108	176
	51	128	70	86	105	117	190
	53	134	74	90	110	122	200
	54	137	75	93	113	125	203
	58	146	80	98	120	133	216
	65	165	90	111	135	150	244
	66	169	92	114	138	154	250
	67	171	94	115	140	155	253
	70	178	98	120	146	162	264
	72	183	100	123	150	166	271

1. U.S. postcard measurements are approximate. Use for reference only.
2. Text and book grades actually calculate out to 51, 61, 71, and 81, but are standardized to book/text weights of 50, 60, 70, and 80.

Download Free Service Manual at http://printer1.blogspot.com

Labels

Use tray 1 to print labels. Labels are multiple-layer media that typically consists of a face sheet (the printable surface), pressure-sensitive adhesive, and a liner (a carrier sheet coated with a release agent). Labels used in the HP LaserJet printer must be specifically designed for laser printers. If labels other than those compatible with laser printers are used, there is a significant risk of labels peeling or of adhesive contamination that can severely damage the printer. All materials in laser label stock must be compatible with the heat and pressure of the fusing process.

CAUTION To avoid damaging the printer, use only labels that are recommended for use in laser printers.

Do not duplex labels or leave the printer default set to `DUPLEX=ON`.

Do not staple labels in the stapler/stacker.

Do not print on the same sheet of labels more than once. The printer might be damaged.

If you have problems printing labels, use tray 1 and open the rear output bin. When selecting labels, consider the quality of each component.

- **Adhesives:** The adhesive material should be stable at 230° C (446° F) for 0.05 seconds (this is the printer's maximum temperature).
- **Arrangement:** Use only labels with no exposed backing between them. Labels can peel off sheets that have spaces between the labels, causing serious jams.
- **Curl:** Before printing, labels must lie flat with no more than 13 mm (0.5 inch) of curl in any direction.
- **Condition:** Do not use labels that have wrinkles, bubbles, or other indications of separation.

Overhead transparencies

Use tray 1 to print overhead transparencies. Overhead transparency film must be designed specifically for use with monochrome laser printers. Photocopy transparency film might not be compatible with laser printers because of higher temperature and stiffness requirements.

Overhead transparency film is very smooth and must have a topcoat to provide the proper electrical and toner adhesion properties. A transparency that is made of poor materials or that is too thin can easily melt in the fuser and damage the printer.

Overhead transparency materials must be compatible with the heat and pressure of the fusing process.

CAUTION To avoid damaging the printer, use only transparencies that are recommended for use in monochrome laser printers.

Do not attempt to duplex overhead transparencies or leave the printer default set to `DUPLEX=ON`. Damage to the printer might result.

Do not staple transparencies in the stapler/stacker.

Transparencies used in the printer must be able to withstand the printer's maximum temperature of 230° C (446° F) for 0.05 seconds. Close the rear output bin to print transparencies to the top output bin. If you have problems printing transparencies, use tray 1 and print to the top output bin. Be sure to remove each transparency from the output bin as it prints to keep the transparencies from sticking together.

Download Free Service Manual at http://printer1.blogspot.com

Envelopes

Envelope construction

Envelope construction is critical. Envelope fold lines can vary considerably, not only between manufacturers, but also within a box from the same manufacturer. Successful printing on envelopes depends upon the quality of the envelopes.

When selecting envelopes, consider the following components. Many envelope manufacturers are now making envelopes optimized for laser printers.

- **Weight:** The weight of the envelope paper should be 75 to 105 g/m^2 (20 to 28 lb) or jamming might result.
- **Construction:** Before printing, envelopes should lie flat with less than 6 mm (0.25 inch) curl, and should not contain air. (Envelopes that trap air might cause problems.)
- **Condition:** Make sure that envelopes are not wrinkled, nicked, or otherwise damaged.
- **Sizes in tray 1:** Use standard and custom sizes from 76 by 127 mm (3 by 5 inches) to 216 by 356 mm (8.5 by 14 inches).
- **Sizes in the optional envelope feeder:** Standard sizes from Monarch (98 by 191 mm, or 3.9 by 7.5 inches) to B5 (ISO) (176 by 250 mm, or 6.9 by 9.8 inches).

If you do not have an optional envelope feeder, always print envelopes from tray 1. If envelopes curl or jam, try opening the rear output bin.

CAUTION Do not duplex envelopes. Damage to the printer might result.

Do not send envelopes to the stacker or stapler/stacker. Damage to the stacker or stapler/stacker might result.

Envelopes with double-side-seams

Double-side-seam construction has vertical seams at both ends of the envelope rather than diagonal seams. This style might be more likely to wrinkle unless properly constructed. Be sure the seam extends all the way to the corner of the envelope.

Envelopes with adhesive strips or flaps

Envelopes that are use a peel-off adhesive strip or with more than one flap that folds over to seal must use adhesives compatible with the heat and pressure in the printer. The extra flaps and strips might cause wrinkling, creasing, or jams.

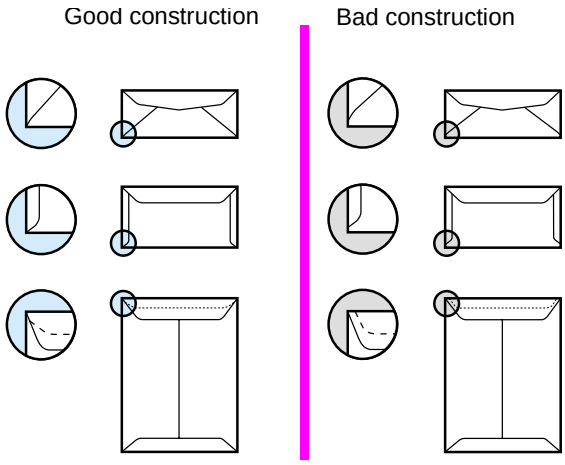

Download Free Service Manual at http://printer1.blogspot.com

Envelope margins

The following table gives typical address margins for a Commercial #10 or DL envelope.

Type of address	Top margin	Left margin
Return address	15 mm (0.6 inches)	15 mm (0.6 inches)
Delivery address	51 mm (2 inches)	89 mm (3.5 inches)

Hint For the best print quality, position margins no closer than 15 mm (0.6 inch) from the edges of the envelope.

Envelope storage

Proper storage of envelopes helps contribute to good print quality. Envelopes should be stored flat. If air is trapped in an envelope, creating an air bubble, then the envelope might wrinkle during printing.

Card stock and heavy paper

Many types of card stock can be printed from tray 1, including index cards and postcards. Some card stock performs well because its construction is better suited for feeding through a laser printer.

For optimum printer performance, do not use paper that is heavier than 200 g/m^2 (53 lb) in tray 1 or 120 g/m^2 (32 lb) in other trays. Paper that is too heavy might cause misfeeds, stacking problems, jams, poor toner fusing, poor print quality, or excessive mechanical wear.

The stacker and stapler/stacker do not support card stock.

CAUTION Do not attempt to duplex card stock or paper heavier than 120 g/m^2 (35 lb), or leave the printer default set to `DUPLEX=ON`. Damage to the printer might result.

Do not attempt to use the stacker or stapler/stacker with card stock.

Note Printing on heavier paper might be possible if the tray is not filled to capacity, and short-grain paper with a smoothness rating of 100 to 180 Sheffield is used.

Card stock construction

- **Smoothness:** Card stock should have smoothness in the range of 100 to 180 Sheffield.
- **Construction:** Card stock should lie flat with less than 5 mm (0.2 inch) of curl. It should be short-grain paper to improve feeding and reduce wear on the printer.
- **Condition:** Make sure that card stock is not wrinkled, nicked, or otherwise damaged.
- **Sizes:** Use only card stock within the following size ranges:
  - minimum: 76 by 127 mm (3 by 5 inches)
  - maximum: 216 by 356 mm (8.5 by 14 inches)

Before loading card stock in tray 1, make sure that it is regular in shape and not damaged. Also, make sure that the cards are not stuck together.

Card stock guidelines

- If cards curl or jam, try printing from tray 1 and opening the rear output bin.
- Set margins at least 6 mm (0.24 inch) away from the edges of the paper.

Download Free Service Manual at http://printer1.blogspot.com

Types of print media to avoid

The following characteristics can affect the performance of the HP LaserJet 4200/4300 printer unless the paper or other print media used is specifically designed to work with HP LaserJet printers.

- Print media that is very rough, highly textured, or heavily embossed.
- Multipart forms.
- Print media that offsets materials or discolors.
- Print media that is damaged, curled, wrinkled, or irregularly shaped.
- Paper that is extremely shiny or glossy.
- Paper, labels, envelopes, or transparencies that produce undesirable emissions or melt when exposed to a fusing temperature of 230° C (446° F) for 0.05 second.
- Media coatings, dyes, or inks that produce undesirable emissions or melt when exposed to a fusing temperature of 230° C (446° F) for 0.05 second.
- Envelopes that have an open flap with the adhesive exposed so that closing the flap seals the envelope.
- Envelopes with clasps, snaps, tie strings, windows, or synthetic materials. These materials can severely damage the printer.
- Envelopes that are not square, straight, or constructed correctly. See "Envelope construction" on page 17.
- Envelopes with a basis weight less than 60 g/m^2 (16 lb) or greater than 105 g/m^2 (28 lb).
- Envelopes with baggy construction or folds that are not sharply creased.

Note Some media types might not work in the printer because of differences in manufacturer specifications or environmental conditions.

Download Free Service Manual at http://printer1.blogspot.com

Safety information

Print cartridge and toner safety

Handling and storage

For information about handling and storing toner, see section 7 in the material safety data sheet (MSDS) at the http://www.hp.com/go/msds website.

First aid measures

For information about toner safety, see section 4 in the material safety data sheet (MSDS) at the http://www.hp.com/go/msds website.

Clothing contact

Note Toner can stain clothing. Hot water or heat (from a clothes dryer) can cause toner to melt and permanently fuse into clothing.

Clothing is best cleaned by removing as much toner as possible with a dry tissue, and then washing with cold water. Air-dry clothing.

Additional information

The print cartridge Material Safety Data Sheet (MSDS) can be obtained by contacting HP at the http://www.hp.com/go/msds website.

Laser safety

Do not open the laser scanner assembly. Avoid direct exposure to the laser beams.

WARNING! Using controls, making adjustments, bypassing safety switches, or performing procedures other than those specified in this service manual can result in exposure to hazardous radiation.

Laser safety statement (U.S.)

The Center for Devices and Radiological Health (CDRH) of the U.S. Food and Drug Administration has implemented regulations for laser products manufactured since August 1, 1976. Compliance is mandatory for products marketed in the United States. The printer is certified as a “Class 1” laser product under the U.S. Department of Health and Human Services (DHHS) Radiation Performance Standard according to the Radiation Control for Health and Safety Act of 1968. Because radiation emitted inside the printer is completely confined within protective housings and external covers, the laser beam cannot escape during any phase of normal user operation.

WARNING! Using controls, making adjustments, or performing procedures other than those specified in this user guide can result in exposure to hazardous radiation.

Download Free Service Manual at http://printer1.blogspot.com

EMI statement (Korea)

사용자 안내문 (B급 기기)

이 기기는 비업무용으로 전자파장해 검정을 받은 기기로서, 주거지역에서는 물론 모든지역에서 사용할 수 있읍니다.

VCCI statement (Japan)

この装置は、情報処理装置等電波障害自主規制協議会（VCCI）の基準に基づくクラスB情報技術装置です。この装置は、家庭環境で使用することを目的としていますが、この装置がラジオやテレビジョン受信機に近接して使用されると、受信障害を引き起こすことがあります。
取り扱い説明書に従って正しい取り扱いをして下さい。

Download Free Service Manual at http://printer1.blogspot.com

Laser statement (Finland)

Luokan 1 laserlaite

Klass 1 Laser Apparat

HP LaserJet 4200 series, 4300 series laserkirjoitin on käyttäjän kannalta turvallinen luokan 1 laserlaite. Normaalissa käytössä kirjoittimen suojakotelointi estää lasersäteen pääsyn laitteen ulkopuolelle. Laitteen turvallisuusluokka on määritetty standardin EN 60825-1 (1994) mukaisesti.

Varoitus!

Laitteen käyttäminen muulla kuin käyttöohjeessa mainitulla tavalla saattaa altistaa käyttäjän turvallisuusluokan 1 ylittävälle näkymättömälle lasersäteilylle.

Varning!

Om apparaten används på annat sätt än i bruksanvisning specificerats, kan användaren utsättas för osynlig laserstrålning, som överskrider gränsen för laserklass 1.

HUOLTO

HP LaserJet 4200 series, 4300 series -kirjoittimen sisällä ei ole käyttäjän huollettavissa olevia kohteita. Laitteen saa avata ja huoltaa ainoastaan sen huoltamiseen koulutettu henkilö. Tällaiseksi huoltotoimenpiteeksi ei katsota väriainekasetin vaihtamista, paperiradan puhdistusta tai muita käyttäjän käsikirjassa lueteltuja, käyttäjän tehtäväksi tarkoitettuja ylläpitotoimia, jotka voidaan suorittaa ilman erikoistyökaluja.

Varo!

Mikäli kirjoittimen suojakotelo avataan, olet alttiina näkymättömälle lasersäteilylle laitteen ollessa toiminnassa. Älä katso säteeseen.

Varning!

Om laserprinterns skyddshölje öppnas då apparaten är i funktion, utsättas användaren för osynlig laserstrålning. Betrakta ej strålen.

Tiedot laitteessa käytettävän laserdiodin säteilyominaisuuksista:

Aallonpituus 775-795 nm
Teho 5 mW
Luokan 3B laser

Download Free Service Manual at http://printer1.blogspot.com

Regulatory information

FCC regulations

This equipment has been tested and found to comply with the limits for a Class B digital device, pursuant to Part 15 of the FCC rules. These limits are designed to provide reasonable protection against harmful interference in a residential installation. This equipment generates, uses, and can radiate radio frequency energy. If this equipment is not installed and used in accordance with the instructions, it may cause harmful interference to radio communications. However, there is no guarantee that interference will not occur in a particular installation. If this equipment does cause harmful interference to radio or television reception, which can be determined by turning the equipment off and on, the user is encouraged to try to correct the interference by one or more of the following measures:

- Reorient or relocate the receiving antenna.
- Increase separation between equipment and receiver.
- Connect equipment to an outlet on a circuit different from that to which the receiver is located.
- Consult your dealer or an experienced radio/TV technician.

Note Any changes or modifications to the printer that are not expressly approved by HP could void the user's authority to operate this equipment.

Use of a shielded interface cable is required to comply with the Class B limits of Part 15 of FCC rules.

Attaching a network interface cable to the printer's LAN connector(s) changes the Class B rating to Class A. For more information see the supplementary ibformation in the "Declaration of Conformity" on page 26.

Download Free Service Manual at http://printer1.blogspot.com

Environmental product stewardship program

Protecting the environment

Hewlett-Packard Company is committed to providing quality products in an environmentally sound manner. This product has been designed with several attributes to minimize impacts on our environment.

Energy consumption

Energy usage drops while in PowerSave mode, which saves natural resources and saves money without affecting the high performance of this product. This product qualifies for ENERGY STAR®, which is a voluntary program to encourage the development of energy-efficient office products.

ENERGY STAR® is a U.S. registered service mark of the U.S. Environmental Protection Agency. As an ENERGY STAR® Partner, Hewlett-Packard Company has determined that this product meets ENERGY STAR® Guidelines for energy efficiency. For more information, see the http://www.energystar.gov website.

Toner consumption

EconoMode uses significantly less toner, which might extend the life of the print cartridge.

Paper use

This product's optional automatic duplex feature (two-sided printing), and n-up printing (multiple pages printed on one page) capability can reduce paper usage and the resulting demands on natural resources.

Plastics

Plastic parts over 25 grams are marked according to international standards that enhance the ability to identify plastics for recycling purposes at the end of the product's life.

HP LaserJet printing supplies

In many countries/regions, this product's printing supplies (for example the print cartridge, drum, and fuser) can be returned to HP through the HP Printing Supplies Returns and Recycling Program. An easy-to-use and free take back program is available in more than 48 countries/regions. Multi-lingual program information and instructions are included in every new HP LaserJet print cartridge and supplies package.

Paper

This product is capable of using recycled papers when the paper meets the guidelines outlined in the *HP LaserJet Printer Family Print Media Guide.*
(See http://www.hp.com/support/ljpaperguide.) This product is suitable for the use of recycled paper according to DIN 19309.

Download Free Service Manual at http://printer1.blogspot.com

Material restrictions

This HP product does not contain added mercury.

This HP product contains lead in solder that might require special handling at end-of-life.

This HP product does not contain batteries.

For recycling information, you can contact http://www.hp.com/recycle, your local authorities, or the Electronics Industries Alliance at http://www.eiae.org.

Material Safety Data Sheet

Material Safety Data Sheets (MSDS) can be obtained by contacting the HP LaserJet Supplies website at http://www.hp.com/hpinfo/community/environment/productinfo.

For more information

To obtain more information about the following environmental topics, visit http://www.hp.com/go/environment or http://www.hp.com/hpinfo/community/environment:

- product environmental profile sheet for this and many related HP products
- HP's commitment to the environment
- HP's environmental management system
- HP's end-of-life supplies return and recycling program
- MSDS

HP Printing Supplies Returns and Recycling program information

Since 1990, the HP Printing Supplies Returns and Recycling program has collected millions of used LaserJet print cartridges that otherwise might have been discarded in the world's landfills. The HP LaserJet print cartridges and supplies are collected and bulk shipped to our resource and recovery partners who disassemble the cartridge. After a thorough quality inspection, selected parts are reclaimed for use in new print cartridges. Remaining materials are separated and converted into raw materials for use by other industries to make a variety of useful products.

U.S. returns

For a more environmentally responsible return of used cartridges and supplies, HP encourages the use of bulk returns. Simply bundle two or more cartridges together and use the single, pre-paid, pre-addressed UPS label that is supplied in the package. For more information in the U.S., call (1-800-340-2445) or visit the HP LaserJet Supplies website at http://www.hp.com/recycle.

Non-U.S. returns

Non-U.S. customers should call their local HP sales and service office or visit the http://www.hp.com/recycle website for further information regarding availability of the HP Supplies Returns and Recycling Program.

Download Free Service Manual at http://printer1.blogspot.com

Declarations of Conformity

Declaration of Conformity	
according to ISO/IEC Guide 22 and EN 45014	
Manufacturer's Name:	Hewlett-Packard Company
Manufacturer's Address:	11311 Chinden Boulevard Boise, Idaho 83714-1021, USA
declares that the product	
Product Name:	HP LaserJet 4200 series HP LaserJet 4300 series
Regulatory Model Numbers:	BOISB-0203-00 BOISB-0204-00
Product Options:	ALL
conforms to the following Product Specifications: [1]	
Safety:	IEC 60950:1999 / EN 60950:2000 IEC 60825-1:1993+A1 / EN 60825-1+A11 Class 1 Laser/LED Product GB4943:1995
EMC:	CISPR 22:1993+A1+A2 / EN 55022:1994+A1+A2 Class B [*2)] EN 61000-3-2:1995 / A14 EN 61000-3-3:1995 EN 55024:1998 FCC Title 47 CFR, Part 15 Class B[3] / ICES-003, Issue 3 AS /NZS 3548:1995+A1+A2 GB9254:1998
Supplementary Information:	
The product herewith complies with the requirements of the EMC Directive 89/336/EEC and the Low Voltage Directive 73/23/EEC, and carries the CE-Marking accordingly.	
[1] The product was tested in a typical configuration with Hewlett-Packard Personal Computer Systems.	
[2] The product includes LAN (local area network) options. When the interface cable is attached to LAN connectors, the product meets the requirements of EN55022 Class A in which case the following applies: Warning — This is a class A product. In a domestic environment, this product may cause radio interference in which case a user may be required to take adequate measures.	
[3] This Device complies with Part 15 of the FCC Rules. Operation is subject to the following two Conditions: (1) this device may not cause harmful interference, and (2) this device must accept any interference received, including interference that may cause undesired operation.	
	Boise, Idaho, USA 17 April 2002
For regulatory topics ONLY, contact:	
Australia Contact:	Product Regulations Manager, Hewlett-Packard Australia Ltd., 31-41 Joseph Street, Blackburn, Victoria 3130, Australia
Europe Contact:	Your Local Hewlett-Packard Sales and Service Office or Hewlett-Packard Gmbh, Department HQ-TRE / Standards Europe, Herrenberger Straße 130, D-71034 Böblingen (FAX: +49-7031-14-3143)
USA Contact:	Product Regulations Manager, Hewlett-Packard Company, PO Box 15, Mail Stop 160, Boise, ID 83707-0015 (Phone: 208-396-6000)

Canadian DOC regulations

Complies with Canadian EMC Class B requirements.

Conforme à la classe B des normes canadiennes de compatibilité électromagnétique (CEM).

Download Free Service Manual at http://printer1.blogspot.com

2 Service approach

Contents

Service approach 28
Parts and supplies. 28
Ordering information 28
Related documentation and software 28
Support 28
HP-authorized resellers and support 29
HP service agreements 29
HP PartnerCare 29
Worldwide service and support offices. 30
Print-cartridge information 31
Refilled print cartridges. 31
Recycling print cartridges 31
Returns. 31
Hewlett-Packard limited warranty statement. 32
Limited warranty for toner cartridge life 33

Download Free Service Manual at http://printer1.blogspot.com

Service approach

Repair of the printer normally begins with the use of the printer's internal diagnostics in conjunction with the troubleshooting procedures that are described in chapter 7. When a faulty part is located, repair is generally accomplished by assembly-level replacement of field-replaceable units (FRUs) (listed in chapter 8). Some mechanical assemblies might be repaired at the subassembly level. Hewlett-Packard does not support replacement of components on printed circuit boards.

Parts and supplies

Ordering information

Chapter 8 of this manual contains FRU and accessory part numbers. Replacement parts can be ordered from the HP Services. Go to http://www.hp.com/go/parts for information about ordering service parts in your area. Go to http://www.hp.com/go/partsinfo for the online HP service parts identification tool (HP PartSurfer).

Use only the accessories that are specifically designed for this printer. Order accessories from an authorized service or support provider, or online at http://www.hp.com (for more information, see chapter 8).

Related documentation and software

Order documentation and software from the sites listed in table 14.

Support

Table 14. Technical support websites

HP Connect Online. (for HP partners)	http://www.connect-online.hp.com HP Connect Online is an Internet site that is created exclusively for our partners. You can easily find all the HP information that you need for your daily business. And you can get it earlier than from any other site.
HP Customer Care Online. Software drivers, support documentation, and answers to frequently asked questions.	http://www.hp.com Select your country/region in the "select a country or region" field on the web page. Select the support block.
HP Technical Training. Classes and schedules.	USA: http://www.partner.americas.hp.com Canada: http://www.canada.hp.com Asia: http://partnercare.asiapac.hp.com Latin America: http://www.conecta.latinamerica.hp.com
Parts. Parts information.	Ordering: http://www.hp.com/go/parts Identifying: http://www.hp.com/go/partsinfo

Download Free Service Manual at http://printer1.blogspot.com

HP provides free telephone support during the product warranty period. When you call, you will be connected to a responsive team waiting to help you. For the number you should call in your country/region, see the support sheet that came in the box with your printer. Before calling have the following information available:

- product name (for example, HP LaserJet 4300 dtns)
- product serial number (found on the underside of the control-panel door.
- the date of purchase of your printer and a description of the problem you are experiencing

Test the software installation. Attempt to print a test page from the software program. Try reinstalling the software. If reinstalling the software does not correct the problem, see the Readme file on the CD-ROM that came with the printer, or call the phone number for your country/region (phone numbers are listed on the support sheet that came in the box with the printer). You can also find answers to frequently asked questions at the following websites:

- htpp//:www.hp.com/support/lj4200
- htpp//:www.hp.com/support/lj4300

HP-authorized resellers and support

To locate HP-authorized resellers and support, call (1) (800) 243-9816 in the U.S. or (1) (800) 387-3867 in Canada. See "Worldwide service and support offices" on page 30 for areas outside of North America.

HP service agreements

For information about HP service agreements, call (1) (800) 743-8305 in the U.S. or (1) (800) 268-1221 in Canada.

HP PartnerCare

You can use the following information to contact HP PartnerCare:

- for PartnerShip Web, http://www.partner.americas.hp.com
- for Connect Online, http://www.connect-online.hp.com
- for Asia Pacific countries/regions, http://partnercare.asiapac.hp.com
- for Canada Partner, http://www.canada.hp.com
- for Latin America, http://www.conecta.latinamerica.hp.com

Download Free Service Manual at http://printer1.blogspot.com

Worldwide service and support offices

- For the U.S., call (1) (208) 323-2551 Monday through Friday from 6 A.M. to 6 P.M., Mountain time.
- For Canada, call (1) (905) 206-4663 or (1) (800) 387-3867 Monday through Friday from 8 A.M. to 8 P.M., Mountain time.
- For customers outside of North America, use the following list and call the appropriate telephone number for the country/region.

Europe

- Austria: 43 (0)810 00 6080
- Belgium
  Dutch: 32 (0)2 626-8806
  French: 32 (0)2 626-8806
- Czech Republic: 42 (0)2 6130 7310
- Denmark: +45 39 29 4099
- International English: +44 (0)207 512 52 02
- Finland: 358 (0)203 47 288
- France: 33 (0)1 43 62 34 34
- Germany: 49 (0)180 52 58 143
- Greece: +30 (0)1 619 64 11
- Hungary: +36 (0)1 382-1111
- Ireland: +353 (0)1 662 5525
- Italy: 39 02 264 10350
- Netherlands: 31 (0)20 606 8751
- Norway: 47 22 11 6299
- Poland: +48 22 865 98 00
- Portugal: 351 21 3176333
- Romania: +40 1 315 44 42 (or 01 3154442)
- Russian Federation
  Moscow: +7 095 797 3520
  St. Petersburg: +7 812 346 7997
- Spain: +34 902 321 123
- Sweden: +46 (0)8 619 2170
- Switzerland: +41 (0)848 80 11 11
- Turkey: +90 212 221 69 69
- Ukraine: +7 (380-44) 490-3520
- U.K.: +44 (0)207 512 52 02

Africa and Middle East

- Egypt: +202 7956222
- International English: +44 (0)207 512 52 02
- Israel: +972 (0)9 9524848
- South Africa
  Inside RSA: 086 000 1030
  Outside RSA: +27-11 258 9301
- United Arab Emirates, Bahrain, Jordan, Kuwait, Lebanon, Oman, Palestine, Qatar, Saudi Arabia, and Yemen: 971 4 883 8454

Asia-Pacific

- Australia: (03) 8877 8000
- China: +86 (0)10 6564 5959
- Hong Kong SAR: +85 (2) 2802 4098
- India: +91 11 682 6035
- Indonesia: +62 (21) 350-3408
- Japan: +81 3 3335-8333
- Republic of Korea
  Seoul: +82 (2) 3270-0700
  Outside Seoul: 080 999-0700
- Malaysia: +60 (3) 295 2566
- New Zealand: +64 (9) 356 6640
- Philippines: +63 (2) 867 3551
- Singapore: +65 272 5300
- Taiwan: +886 (2) 2717 0055
- Thailand: +66 (2) 661 4000
- Vietnam: +84 (0) 8 823 4530

Latin America

- Argentina: 0810-555-5520
- Brazil
  Greater Sao Paulo: (11) 3747-7799
  Outside Greater São Paulo: 0800-157751
- Chile: 800-22-5547
- Guatemala: 800-999-5305
- Mexico
  Mexico City: 52-58-9922
  Outside Mexico City: 01-800-472-6684
- Peru: 0-0800-10111
- Puerto Rico: 1-877-2320-589
- Venezuela
  Caracas: 207 8488
  Outside Caracas: 800 47 777

Download Free Service Manual at http://printer1.blogspot.com

Print-cartridge information

The print cartridge is designed to simplify replacement of the major consumable parts. The print cartridge contains the printing drum and a supply of toner.

At five-percent page coverage, a print cartridge prints approximately 12,000 pages (for the HP LaserJet 4200) or 18,000 pages (for the HP LaserJet 4300). A print cartridge might print fewer pages if it is routinely used to print with dense ink coverage, or print more pages when it is routinely used to print pages with less ink coverage (such as short memos). If EconoMode or small media is always used, however, the toner supply might outlast the mechanical parts in the print cartridge.

Refilled print cartridges

While Hewlett-Packard does not prohibit the use of refilled print cartridges during the warranty period or while the printer is under a maintenance contract. However, the use of refilled cartridges is not recommended for the following reasons:

- Repairs resulting from the use of refilled print cartridges are not covered under Hewlett-Packard warranty or maintenance contracts.
- Hewlett-Packard has no control or process to ensure that a refilled print cartridge functions at the same high level of reliability as a new HP LaserJet print cartridge. Hewlett-Packard also cannot predict the long-term reliability effect on the printer from using the differing toner formulations that are found in refilled cartridges.
- The print quality of HP LaserJet print cartridges influences the customer's perception of the printer. Hewlett-Packard has no control over the actual print quality of a refilled print cartridge.

Recycling print cartridges

In many countries/regions this product's printing supplies (for example, the print cartridge, the drum, and the fuser) can be returned to HP through the HP printing supplies returns and recycling program. this program is an easy-to-use free take-back program and is available in more than 48 countries/regions. Multi-lingual program information and instructions are included in every new HP LaserJet print cartridge and supplies package.

Since 1990, the HP printing supplies returns and recycling program has collected more than 47 million used LaserJet print cartridges that otherwise would have ended up in the world' landfills. Print cartridges and supplies are collected by HP's resource and recovery partners. After a thorough inspection, selected parts are reclaimed for use in new print cartridges. The remaining materials are separated and converted into raw materials for use by other industries to make a variety of products.

Returns

- **U.S. returns**
  For a more environmentally responsible return of used print cartridges and supplies, HP encourages the use of bulk returns. Bundle two or more print cartridges together and use the single, prepaid, preaddress United Parcel Service (UPS) label that was included in the package. For more information in the U.S. call (1) (800) 340-2445 or visit the HP LaserJet supplies http://www.hp.com/recycle website.
- **Non-U.S. returns**
  Customers should call the local HP sales and service office (see"Worldwide service and support offices" on page 30) or visit the HP LaserJet supplies http://www.hp.come/recycle website for more information about the HP printing supplies returns and recycling program.

Download Free Service Manual at http://printer1.blogspot.com

Hewlett-Packard limited warranty statement

HP PRODUCT	DURATION OF WARRANTY
HP LaserJet 4200, 4200n, 4200tn, 4200dtn, 4200dtns, and 4200dtnsL	1 year from purchase date - return for repair
HP LaserJet 4300, 4300n, 4300tn, 4300dtn, 4300dtns, and 4300dtnsL	1 year from purchase date - return for repair

1. HP warrants to you, the end-user customer, that HP hardware and accessories will be free from defects in materials and workmanship after the date of purchase, for the period specified above. If HP receives notice of such defects during the warranty period, HP will, at its option, either repair or replace products which prove to be defective. Replacement products may be either new or equivalent in performance to new.

2. HP warrants to you that HP software will not fail to execute its programming instructions after the date of purchase, for the period specified above, due to defects in material and workmanship when properly installed and used. If HP receives notice of such defects during the warranty period, HP will replace the software which does not execute its programming instructions due to such defects.

3. HP does not warrant that the operation of HP products will be uninterrupted or error free. If HP is unable, within a reasonable time, to repair or replace any product to a condition as warranted, you will be entitled to a refund of the purchase price upon prompt return of the product.

4. HP products may contain remanufactured parts equivalent to new in performance or may have been subject to incidental use.

5. Warranty does not apply to defects resulting from (a) improper or inadequate maintenance or calibration, (b) software, interfacing, parts or supplies not supplied by HP, (c) unauthorized modification or misuse, (d) operation outside of the published environmental specifications for the product, or (e) improper site preparation or maintenance.

6. TO THE EXTENT ALLOWED BY LOCAL LAW, THE ABOVE WARRANTIES ARE EXCLUSIVE AND NO OTHER WARRANTY OR CONDITION, WHETHER WRITTEN OR ORAL, IS EXPRESSED OR IMPLIED AND HP SPECIFICALLY DISCLAIMS ANY IMPLIED WARRANTIES OR CONDITIONS OF MERCHANTABILITY, SATISFACTORY QUALITY, AND FITNESS FOR A PARTICULAR PURPOSE. Some countries/regions, states or provinces do not allow limitations on the duration of an implied warranty, so the above limitation or exclusion might not apply to you. This warranty gives you specific legal rights and you might also have other rights that vary from country/region to country/region, state to state, or province to province.

7. HP's limited warranty is valid in any country/region or locality where HP has a support presence for this product and where HP has marketed this product. The level of warranty service you receive may vary according to local standards. HP will not alter form, fit, or function of the product to make it operate in a country/region for which it was never intended to function for legal or regulatory reasons.

8. TO THE EXTENT ALLOWED BY LOCAL LAW, THE REMEDIES IN THIS WARRANTY STATEMENT ARE YOUR SOLE AND EXCLUSIVE REMEDIES. EXCEPT AS INDICATED ABOVE, IN NO EVENT WILL HP OR ITS SUPPLIERS BE LIABLE FOR LOSS OF DATA OR FOR DIRECT, SPECIAL, INCIDENTAL, CONSEQUENTIAL (INCLUDING LOST PROFIT OR DATA), OR OTHER DAMAGE, WHETHER BASED IN CONTRACT, TORT, OR OTHERWISE. Some countries/regions, states, or provinces do not allow the exclusion or limitation of incidental or consequential damages, so the above limitation or exclusion may not apply to you.

   THE WARRANTY TERMS CONTAINED IN THIS STATEMENT, EXCEPT TO THE EXTENT LAWFULLY PERMITTED, DO NOT EXCLUDE, RESTRICT OR MODIFY AND ARE IN ADDITION TO THE MANDATORY STATUTORY RIGHTS APPLICABLE TO THE SALE OF THIS PRODUCT TO YOU.

Note This warranty might differ from country/region to country/region.

Download Free Service Manual at http://printer1.blogspot.com

Limited warranty for toner cartridge life

Note The warranty below applies to the print cartridge that came with this printer. This warranty supersedes all previous warranties.

The HP print cartridge is warranted to be free from defects in materials and workmanship for the life of the cartridge until the HP toner is depleted. The HP toner is depleted when the printer indicates a toner-low message. Hewlett-Packard will, at its option, either replace products that prove to be defective or refund the purchase price.

The warranty does not cover print cartridges that have been refilled, or are emptied, abused, misused, or tampered with in any way. This limited warranty gives the customer specific legal rights. The customer might have other rights which vary from state to state, province to province, and country/region to country/region.

To the extent allowed by applicable law, in no event shall Hewlett-Packard Company be liable for any incidental, consequential, special, indirect, punitive, or exemplary damages or lost profits from any break of this warranty or otherwise.

Download Free Service Manual at http://printer1.blogspot.com

Download Free Service Manual at http://printer1.blogspot.com

3 Printer operation

Contents

Using the control panel 36
Control-panel layout 36
Control-panel lights 36
Control-panel buttons 37
Using the printer Help system 37
Settings and defaults 38
Setting the control-panel display language 38
Control-panel menus 39
Overview 39
Printing and changing control-panel menus 39
To print a control-panel menu map 39
To change a control-panel setting 40
Retrieve Job menu 41
Information menu 41
Paper Handling menu 42
Configure Device menu 44
Printing submenu 44
PCL sub-submenu (a submenu in the printing submenu) 45
Print Quality submenu 46
System Setup submenu 49
Stapler/stacker submenu 51
I/O submenu 52

Note For information about the resets submenu, diagnostics menu, and the service menu, see "Resets submenu" on page 247, "Diagnostics menu" on page 248, and "Service menu (service PIN codes)" on page 249.

Download Free Service Manual at http://printer1.blogspot.com

Using the control panel

Control-panel layout

The printer control panel consists of the following features:

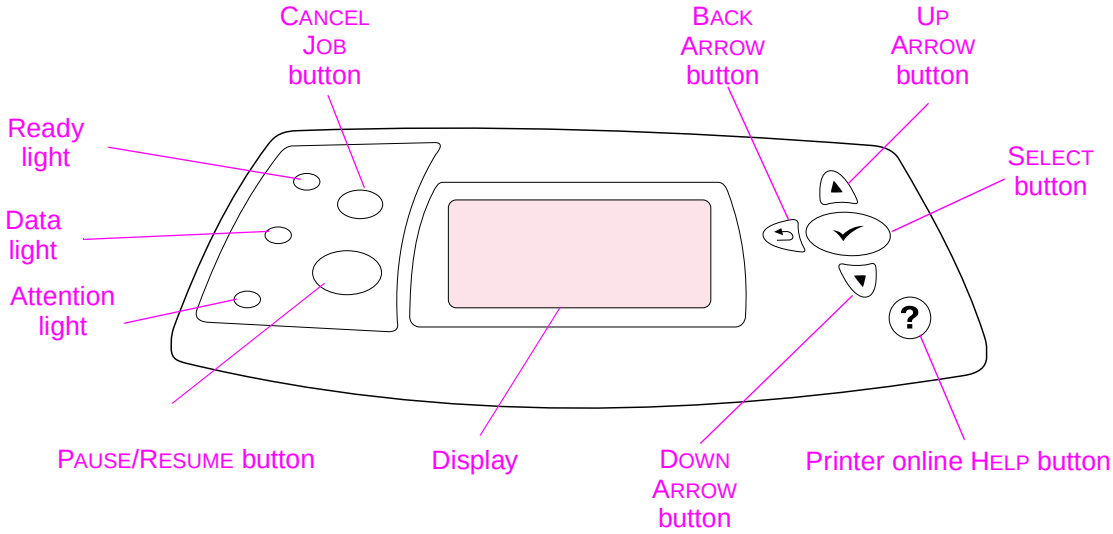

Figure 2. **Control-panel layout**

Control-panel lights

The control-panel lights provide information about printer status.

Table 15. Control-panel lights

Light	Indication
Ready	The printer is ready to print.
Data	The printer is processing information.
Attention	Action is required. See the control-panel display.

Download Free Service Manual at http://printer1.blogspot.com

Control-panel buttons

The following table explains the function of each button on the printer control panel.

Table 16. Control-panel buttons

Button	Function
CANCEL JOB	• Cancels the print job that the printer is processing, clears the paper path, and clears any continuable errors that are associated with the canceled job. The time that it takes to cancel depends on the size of the print job. (Press the button only once.)
PAUSE/RESUME	• When the printer is processing a print job, pauses the print job. • When the printer is paused, pushing this button resumes printing or returns the printer to the Ready state. • Closes the menus or Help.
(SELECT)	• Opens the menus. • In the menus, selects the menu item currently highlighted. • Finishes a print job that is waiting for a form feed. • Clears a continuable error, or shows the options for resolving the continuable error.
(BACK ARROW)	• Returns to the previous level of menus or to the previous numeric entry. • Closes Help. • Closes the menus if the button is pressed for one full second or more.
(UP ARROW)	• Navigates to the previous item on the current menu. • For numeric values, pushing this button increases the value to the next increment. If the button is held down for more than one second, the value increases rapidly. • In Help, scrolls to the previous four lines of the current topic (if any).
(DOWN ARROW)	• Navigates to the next item on the current menu. • For numeric values, pushing this button decreases the value to the previous increment. If the button is held down for more than one second, the value decreases rapidly. • In Help, scrolls to the next four lines of the current topic (if any).
? (HELP)	• Shows additional Help for the current. (Not all messages have additional Help topics.) • Closes Help.

Using the printer Help system

This printer features a Help system at the control panel that provides instructions for resolving most printer errors. Some Help topics include animations that appear on the printer control panel display to show you how to resolve an error.

To view Help for a message (if one is available), press HELP (?). If the Help topic is longer than four lines, use the UP ARROW ( ) or the DOWN ARROW ( ) button to scroll through the entire topic.

To close the Help system, press HELP (?) again.

Download Free Service Manual at http://printer1.blogspot.com

Settings and defaults

The printer makes most printing decisions based on either temporary settings or permanent defaults.

Note Settings sent from software applications override printer defaults.

Table 17. Settings and defaults

Setting or default	Explanation
Temporary setting	A value that is set in the software program for the current print job. For example, a request from the software to print three copies instead of the control panel default value of one copy is a temporary setting. The printer continues to use the temporary setting until it receives another software request or until it is reset.
Control-panel default	A value set at the control panel when you select a menu item. An asterisk appears next to the setting, indicating the default setting. The printer retains this default when power to the printer is turned off.
Factory default	The value set for each menu item at the factory. Factory defaults are listed in the item column of the menu tables starting with "Retrieve Job menu" on page 41.

Note For information about the resets submenu, diagnostics menu, and the service menu, see "Resets submenu" on page 247, "Diagnostics menu" on page 248, and "Service menu (service PIN codes)" on page 249.

Setting the control-panel display language

The control-panel display can be set to display messages in different languages. The default setting is English.

1. Press and hold the SELECT (✓) button while turning on the printer. Continue to hold down the SELECT (✓) button until the three control-panel LEDs are illuminated.
2. Release the SELECT (✓) button.
3. The message SELECT LANGUAGE appears on the display. Use the UP ARROW (▲) button or DOWN ARROW (▼) button to scroll to the language you want to see on the display.
4. Press the SELECT (✓) button to save your choice. An asterisk (*) appears beside the selected language.

Download Free Service Manual at http://printer1.blogspot.com

Control-panel menus

Overview

Most routine printing tasks performed by the printer come from a computer using an application program or a printer driver. These two methods are the most convenient way to control the printer, and they override the printer control-panel settings. See the Help file for your program for more information.

Printer settings can also be changed by using the printer control panel. Use the control panel to gain access to printer features that are not supported by the software program or the printer driver.

The following control panel menus are available.

- Retrieve job menu
- Information menu
- Paper handling menu
- Configure device menu
  - Printing submenu
    - PCL submenu
  - Print quality submenu
  - System setup submenu
  - Stapler/stacker submenu
  - I/O submenu
  - Resets menu ("Resets submenu" on page 247)
- Diagnostics menu ("Diagnostics menu" on page 248)
- Service menu ("Service menu (service PIN codes)" on page 249)

Printing and changing control-panel menus

To see the current settings for the menus and items that are available at the control panel, print a control-panel menu map. You might want to store the menu map near the printer for reference.

For a complete list of menu items and possible values, see the menu tables in "Control-panel menus" on page 39. Certain menu options appear only if the associated tray or accessory is installed. For example, the EIO menu appears only if you have an EIO card installed.

To print a control-panel menu map

1. Press the SELECT (✓) button to open the menus.
2. Use the UP ARROW (▲) button or the DOWN ARROW (▼) button to scroll to `INFORMATION`, and then press the SELECT (✓) button.
3. Use the UP ARROW (▲) button or the DOWN ARROW (▼) button to scroll to `PRINT MENU MAP`, and then press the SELECT (✓) button.

Download Free Service Manual at http://printer1.blogspot.com

To change a control-panel setting

1. Press the SELECT (✓) button to open the menus.
2. Use the UP ARROW (▲) button or the DOWN ARROW (▼) button to scroll to the menu that you want, and then press the SELECT (✓) button.
3. Some menus might have several submenus. Use the UP ARROW (▲) button or the DOWN ARROW (▼) button to scroll to the submenu item that you want, and then press the SELECT (✓) button.
4. Use the UP ARROW (▲) button or the DOWN ARROW (▼) button to scroll to the setting, and then press the SELECT (✓) button. Some settings change rapidly if the UP ARROW (▲) button or the DOWN ARROW (▼) button is held down. An asterisk (*) appears next to the selection on the display, indicating that it is now the default.
5. Press the PAUSE/RESUME button to close the menu.

Note Settings established in the printer driver and software program override control-panel settings (software-program settings override printer-driver settings).

If you cannot gain access to a menu or item, it is either not an option for the printer, or you have not enabled the associated higher-level option. See the network administrator if a function has been locked. (`ACCESS DENIED MENUS LOCKED` appears on the printer control-panel display.)

Download Free Service Manual at http://printer1.blogspot.com

Retrieve Job menu

This menu supplies a list of the jobs stored in the printer and provides access to the Job Storage feature. You can print or delete these jobs at the printer control panel.

Note If you turn the printer power off, all stored jobs are deleted unless an optional hard disk is installed.

Table 18. Retrieve job menu

Item	Values	Explanation
NO STORED JOBS	No stored job.	Indicates that there are no stored jobs to print or delete.

Information menu

This menu contains printer information pages that provide details about the printer and its configuration. To print an information page, scroll to the page you want and press the SELECT (✓) button.

Table 19. Information menu

Item	Explanation
PRINT MENU MAP	The menu map shows the layout and current settings of the printer control-panel menu items. To print a menu map, see "Menu map" on page 240.
PRINT CONFIGURATION	The configuration page shows the current printer configuration. If an HP Jetdirect print server is installed, an HP Jetdirect configuration page will also print. To print a configuration page, see "Configuration page" on page 241.
PRINT SUPPLIES STATUS PAGE	The supplies status page shows the levels of the supplies for the printer, calculation of the remaining number of pages that the supplies can print, and cartridge-usage information. If you are not using genuine HP supplies, some or all of the supplies information is not available (for example, the toner-supply gauge). To print a supplies status page, see "Supplies status page" on page 242.
PRINT FILE DIRECTORY	This directory appears only if a mass storage device that contains a recognized file system is installed in the printer, such as an optional flash DIMM or optional hard-disk accessory. The file directory shows information for all installed mass storage devices. For more information, see the *HP LaserJet 4200/4300 Use Guide*.
PRINT PCL FONT LIST	The PCL font list shows all the PCL fonts that are currently available to the printer. For more information, see the *HP LaserJet 4200/4300 Use Guide*.
PRINT PS FONT LIST	The PS font list shows all the PS fonts currently available to the printer. For more information, see the *HP LaserJet 4200/4300 Use Guide*.

Download Free Service Manual at http://printer1.blogspot.com

Paper Handling menu

If paper-handling settings are correctly configured at the printer control panel, you can print by selecting the type and size of paper in the software program or the printer driver. For more information about configuring for paper types and sizes, and information about supported paper types and sizes, see "Supported sizes and weights of media" on page 10 and "Supported types of media" on page 14.

Some items on this menu (such as duplex and manual feed) are available in the program or printer driver (if the appropriate driver is installed). Program and printer-driver settings override control panel settings. For more information, see the *HP LaserJet 4200/4300 Use Guide*.

The following section lists the settings and their possible values in the **Paper Handling** menu. The default value for each setting is the one that has an asterisk (*) next to it.

Table 20. Paper-handling menu

Item	Values	Explanation
TRAY 1 SIZE	*ANY SIZE LETTER LEGAL EXECUTIVE A4 A5 B5 (ISO) B5 (JIS) EXECUTIVE (JIS) DPOSTCARD (JIS) 16K ENVELOPE #10 ENVELOPE MONARCH ENVELOPE C5 ENVELOPE DL ENVELOPE B5 ANY CUSTOM	The value corresponds to the media size that is currently loaded in tray 1. ANY: If both the type and size for tray 1 are set to ANY, the printer will pull media from tray 1 first if media is loaded in the tray. A size other than ANY: The printer does not pull from tray 1 unless the type or size of the print job matches the type or size loaded in this tray. For more information, see the *HP LaserJet 4200/4300 Use Guide*.
TRAY 1 TYPE	*ANY PLAIN PREPRINTED LETTERHEAD TRANSPARENCY PREPUNCHED LABELS BOND RECYCLED COLOR CARDSTOCK > 164 g/m^2 ROUGH	The value corresponds to the type of paper or other print media currently loaded in tray 1. ANY: If both the type and size for tray 1 are set to ANY, the printer will pull media from tray 1 first if media is loaded in the tray. A type other than ANY: The printer does not pull from tray 1 unless the type or size of the print job matches the type or size loaded in this tray.
TRAY [N] SIZE	*LETTER LEGAL A4 EXECUTIVE A5 B5 (JIS) CUSTOM	Automatically detects the standard media size currently loaded in the specified tray, where [N] is the number of the tray.

Download Free Service Manual at http://printer1.blogspot.com

Table 20. Paper-handling menu (continued)

Item	Values	Explanation
TRAY [N] TYPE	ANY *PLAIN PREPRINTED LETTERHEAD TRANSPARENCY PREPUNCHED LABELS BOND RECYCLED COLOR CARDSTOCK > 164 g/m^2 ROUGH	Automatically detects the standard media size currently loaded in the specified tray, where [N] is the number of the tray.

Download Free Service Manual at http://printer1.blogspot.com

Configure Device menu

This menu contains administrative functions in the following submenus:.

- Printing submenu
  - PCL submenu
- Print quality submenu
- System setup submenu
- Stapler/stacker submenu
- I/O submenu

Printing submenu

Some items on this menu are available in the software program or the printer driver (if the appropriate driver is installed). Program and printer-driver settings override control-panel settings. In general, it is better to change these settings in the printer driver, if applicable.

The following section lists the settings and their possible values in the **Printing** submenu. The default value for each setting is the one that has an asterisk (*) next to it.

Table 21. Printing submenu

Item	Values	Explanation
COPIES	*1 to 32000	The default number of copies can be set to any number from 1 to 32000. Use the UP ARROW (▲) button or the DOWN ARROW (▼) button to select the number of copies. This setting applies only to print jobs tin which the number of copies is not specified in the software program or the printer driver, such as a MS-DOS, UNIX, or Linux application. **Note** It is best to set the number of copies in the program or printer driver. (Program and printer-driver settings override control-panel settings.)
DEFAULT PAPER SIZE	ANY *LETTER LEGAL EXECUTIVE A4 A5 B5 (ISO) B5 (JIS) EXECUTIVE (JIS) DPOSTCARD (JIS) 16K ENVELOPE #10 ENVELOPE MONARCH ENVELOPE C5 ENVELOPE DL ENVELOPE B5 CUSTOM	The default image size for media. (The item name changes from paper to envelope as you scroll through the available sizes.) This setting applies only to print jobs in which the paper size is not specified in the software program or the printer driver. **Note** It is best to set the number of copies in the program or printer driver. (Program and printer-driver settings override control-panel settings.)
DEFAULT CUSTOM PAPER SIZE	UNIT OF MEASURE X DIMENSION Y DIMENSION	The default custom paper size for tray 1 or any 500-sheet tray. This menu appears only if the Custom-Standard switch in the selected tray is set to Custom.
PAPER DESTINATION	*STANDARD OUTPUT OPTIONAL BIN 1	Use this item to configure the output destination. Only installed bins appear on the menu.
DUPLEX	*OFF ON	Appears only if an optional duplex printing accessory is installed. Set the value to ON to print on both sides (duplex) or OFF to print on one side (simplex) of a sheet of paper.

Download Free Service Manual at http://printer1.blogspot.com

Table 21. Printing submenu (continued)

Item	Values	Explanation
OVERRIDE A4/ LETTER	*NO YES	Use this item to instruct the printer to print an A4-size job on letter-size media if A4-size paper is not loaded in the printer (or vice versa).
MANUAL FEED	*OFF ON	Use this item to instruct the printer to feed the media manually from tray 1, rather than automatically from a tray. If MANUAL FEED=ON and tray 1 is empty, the printer goes offline when it receives a print job. MANUALLY FEED [PAPER SIZE] appears on the printer control-panel display.
COURIER FONT	*REGULAR DARK	Specify the version of Courier font to use: REGULAR**:** The internal Courier font available on the HP LaserJet 4 series printers. DARK**:** The internal Courier font available on the HP LaserJet 4200/4300 series printers.
WIDE A4	*NO YES	Changes the number of characters that can be printed on a single line of A4-size paper. NO**:** Up to 78 10-pitch characters can be printed on one line. YES**:** Up to 80 10-pitch characters can be printed on one line.
PRINT PS ERRORS	*OFF ON	Use this item to tell the printer whether or not to print a postscript (PS; an object orientated computer language used to describe the layout of documents to be printed) error page prints. OFF: PS error page never prints. ON: PS error page prints when PS errors occur.

PCL sub-submenu (a submenu in the printing submenu)

The following section lists the settings and their possible values in the **PCL** submenu. The default value for each setting is the one that has an asterisk (*) next to it.

Table 22. PCL submenu

Item	Values	Explanation
FORM LENGTH	5 to 128 (*60)	Use this item to set vertical spacing from 5 to 128 lines for the default paper size.
ORIENTATION	*PORTRAIT LANDSCAPE	Use this item to select default page orientation. **Note** It is best to set the page orientation in the software program or printer driver. (Program and printer-driver settings override control-panel settings.)
FONT SOURCE	*INTERNAL SOFT SLOT 1, 2, or 3	INTERNAL**:** Internal fonts. SOFT**:** Permanent soft fonts. This option is available only if it is installed. SLOT 1, 2, or 3**:** Fonts stored in one of the three DIMM slots. This option is available only if it is installed.
FONT NUMBER	*0 to 999	The printer assigns a number to each font and lists the numbers on the PCL Font List. The font number appears in the Font # column of the printout.
FONT PITCH	0.44 to 99.99 (*10.00)	Use this item to select the font pitch. This item might not appear, depending on the selected font.

Download Free Service Manual at http://printer1.blogspot.com

Table 22. PCL submenu (continued)

Item	Values	Explanation
SYMBOL SET	*PC-8 Several	Use this item to select any one of several available symbol sets at the printer control panel. A symbol set is a unique grouping of all the characters in a font. PC-8 or PC-850 is recommended for line-draw characters.
APPEND CR TO LF	*NO YES	Select YES to append a carriage return to each line feed that is encountered in backward-compatible PCL jobs (pure text, no job control). Some environments, such as UNIX, indicate a new line using only the line-feed control code. Use this item to append the required carriage return to each line feed.

Print Quality submenu

Some items on this menu are available in the software program or the printer driver (if the appropriate driver is installed). Program and printer-driver settings override control-panel settings. For more information, see the *HP LaserJet 4200/4300 Use Guide*. In general, it is best to change these settings in the printer driver, if applicable.

The following section lists the settings and their possible values in the **Print Quality** submenu.The default value for each setting is the one that has an asterisk (*) next to it.

Table 23. Print quality submenu

Item	Values	Explanation
SET REGISTRATION	No value available.	Use this item to shift the margin alignment to center the image on the page from top to bottom, and from left to right. You can also align the image that is printed on the front with the image that is printed on the back.
PRINT TEST PAGE ● SOURCE ● ADJUST TRAY [N] X1 Shift X2 Shift Y Shift	● SOURCE ALL TRAYS TRAY 1 *TRAY 2 TRAY [N]	Use this item to select the tray from which you want to print the test page. If installed, optional trays appear as selections, where [N] is the number of the tray.
	● ADJUST TRAY [N] X1 Shift X2 Shift Y Shift -20 to 20 (*0)	Use this item to set the registration for the specified tray, where [N] is the number of the tray. A selection appears for each tray that is installed, and registration must be set for each tray. X1 SHIFT: Registration of the image on the page from side to side, as the media lies in the tray. For duplexing, this side is the second side (back) of the page. X2 SHIFT: Registration of the image on the page from side to side, as the media lies in the tray, for the first side (front) of a duplexed page. Y SHIFT: Registration of the image on the page from top to bottom, as the media lies in the tray.

Download Free Service Manual at http://printer1.blogspot.com

Table 23. Print quality submenu (continued)

Item	Values	Explanation
FUSER MODES PLAIN PREPRINTED LETTERHEAD TRANSPARENCY PREPUNCHED LABELS BOND RECYCLED COLOR CARDSTOCK>164 G/M2 ROUGH	[Paper Type]= NORMAL LOW HIGH1 HIGH2 ENVELOPE RESTORE MODES	Use this item to configures the fuser mode associated with each media type. Change the fuser mode only if you are experiencing problems printing on certain types of media. After you select a type of paper, you can select a fuser mode that is available for that type. The available selections might include some or all of the following modes: NORMAL: Used for most types of paper. HIGH 1: Used for rough paper. LOW: Used for transparencies. HIGH 2: Used for paper that has a special or rough finish. The default fuser mode is NORMAL for all print media types except transparencies (LOW), and rough paper (HIGH 1). **CAUTION** Do not change the fuser mode for transparencies. Failure to use the LOW setting while printing transparencies can result in permanent damage to the printer and fuser. Always select **Transparencies** as the **Type** in the printer driver and set the tray type at the printer control panel to TRANSPARENCY. When selected, RESTORE MODES resets the fuser mode for each media type back to its default setting.
OPTIMIZE ● HIGH TRANSFER ● LINE DETAIL ● RESTORE OPTIMIZE ● RESOLUTION	● HIGH TRANSFER *OFF ON ● LINE DETAIL *OFF On ● RESTORE OPTIMIZE ● RESOLUTION 300 600 *FASTRES 1200 PRORES 1200	Set this value to ON if you are using highly resistive, lower-quality papers. (See "Scattered lines" on page 321 and "Blurred print" on page 321.) HP recommends using only HP paper and print media. Set this value to ON to improve the appearance of lines if scattered lines are appearing. (See "Scattered lines" on page 321 and "Blurred print" on page 321.) Use this item to return the OPTIMIZE submenu settings to factory defaults. Use this item to select the resolution. All values print at the same speed. 300**:** Produces draft print quality and can be used for compatibility with the HP LaserJet III family of printers. 600**:** Produces high-quality text print and can be used for compatibility with the HP LaserJet 4 family of printers. FASTRES 1200: Produces near-1200-dpi print quality for fast, high-quality printing of business text and graphics. PRORES 1200: Produces 1200-dpi printing for the best quality in line art and graphic images. **Note** It is best to change the resolution in the software program or printer driver. (Program and printer-driver settings override control-panel settings.)

Download Free Service Manual at http://printer1.blogspot.com

Table 23. Print quality submenu (continued)

Item	Values	Explanation
RET	OFF LIGHT *MEDIUM DARK	Use the Resolution Enhancement technology (REt) setting to produce print with smooth angles, curves, and edges. REt does not affect print quality if the print resolution is set to FastRes 1200. All other print resolutions benefit from REt. **Note** It is best to change the REt setting in the software program or the printer driver. (Program and printer-driver settings override control-panel settings.)
ECONOMODE	*OFF ON	Turn EconoMode ON (to save toner) or OFF (for high quality). EconoMode creates draft-quality printing by reducing the amount of toner on the printed page. **Note** It is best to turn EconoMode on or off in the software program or the printer driver. (Program and printer driver-settings override control-panel settings.) **CAUTION** HP does not recommend full-time use of EconoMode. If EconoMode is used full-time, it is possible that the toner supply will outlast the mechanical parts in the print cartridge.
TONER DENSITY	1 2 *3 4 5	Lighten or darken the print on the page by setting the toner density. Select a setting from 1 (light) to 5 (dark). The default setting of 3 usually produces the best results. **Note** It is best to change the toner density in the software program or the printer driver. (Program and printer-driver settings override control-panel settings.)
CREATE CLEANING PAGE	No value available.	Press the SELECT (✓) button to print a cleaning page manually (for cleaning toner from the fuser). Open the rear output bin. Follow the instructions on the cleaning page.

Download Free Service Manual at http://printer1.blogspot.com

System Setup submenu

Items on this menu affect printer behavior. Configure the printer according to your printing needs.

The following section lists the settings and their possible values in the **System Setup** submenu. The default value for each setting is the one that has an asterisk (*) next to it.

Table 24. System setup submenu

Item	Values	Explanation
JOB STORAGE LIMIT	1 to 100 (*32)	Use this item to specify the number of quick copy jobs that can be stored on the printer. This item appears only if an optional hard disk accessory is installed.
JOB HELD TIMEOUT	*OFF 1 HOUR 4 HOURS 1 DAY 1 WEEK	Use this item to set the amount of time that held jobs are retained before being automatically deleted from the queue.
TRAY BEHAVIOR ● USE REQUESTED TRAY ● MANUAL FEED PROMPT	● USE REQUESTED TRAY Exclusively *First	Determines whether the printer tries to pull media from a tray other than the one that was selected in the printer driver. EXCLUSIVELY: Sets the printer to pull media only from the tray that you selected and not from another tray, even if the tray you selected is empty. FIRST: Sets the printer to pull first from the tray that you selected, but then to pull from another tray automatically if the tray you selected is empty.
	● MANUAL FEED PROMPT Always *Unless Loaded	Use this item to tell the printer to show a prompt about pulling from tray 1 if the print job does not match the type or size loaded in any other tray. ALWAYS: Select this option if you always want to be prompted before the printer pulls from tray 1. UNLESS LOADED: Prompts you only if tray 1 is empty.
POWERSAVE TIME	1 MINUTE 15 MINUTES *30 MINUTES 60 MINUTES 90 MINUTES 2 HOURS 4 HOURS	Use this item to set how long the printer remains idle before it enters the PowerSave mode. PowerSave mode does the following: ● minimizes the amount of power the printer consumes when it is idle ● reduces wear on electronic components in the printer (turns off the display backlight, but the display is still readable) The printer automatically comes out of PowerSave mode when you send a print job, press a printer control-panel button, open a tray, or open the top cover.
PERSONALITY	*AUTO PS PCL	Use this item to select the default printer language (personality). The available values depend on which valid printer languages are installed in the printer. Normally, you should not change the printer language. If you change it to a specific printer language, the printer will not switch automatically from one language to another unless specific software commands are sent to the printer.

Download Free Service Manual at http://printer1.blogspot.com

Table 24. System setup submenu (continued)

Item	Values	Explanation
CLEARABLE WARNINGS	*JOB ON	The amount of time that a clearable warning is shown on the printer control-panel display. JOB: The clearable warning message appears until the end of the job that generated the message. ON: The clearable warning message appears until you press the SELECT (✓) button.
AUTO CONTINUE	OFF *ON	Use this item to tell the printer how to react to errors. If the printer is on a network, you probably want to turn AUTO CONTINUE to ON. ON: If an error occurs that prevents printing, the message appears on the printer control-panel display, and the printer goes offline for 10 seconds before returning online. OFF: If an error occurs that prevents printing, the message remains on the printer control panel display, and the printer remains offline until you press the SELECT (✓) button.
CARTRIDGE LOW	STOP *CONTINUE	Use this item to tell the printer how to behave if the print cartridge is low. The ORDER CARTRIDGE message first appears when about 15 percent of the toner remains in the print cartridge when printing at 5 percent coverage. (For the 12,000-page cartridge in the LaserJet 4200 series, 15 percent means that about 1,800 pages remain. For the 18,000-page cartridge in the LaserJet 4300 series, 15 percent means that about 2,700 pages remain.) Good print quality is not guaranteed if you print after receiving this message. STOP: The printer pauses printing until you replace the print cartridge. If you do not replace the cartridge, you must press the SELECT (✓) button before each job to print that job. The message appears until you replace the print cartridge. CONTINUE: The printer continues to print, but the message continues to appear until you replace the print cartridge.
CARTRIDGE OUT	STOP *CONTINUE	Use this item to tell the printer how to act if the print cartridge is empty. STOP: The printer stops printing until you replace the print cartridge. CONTINUE: The printer continues to print, and the REPLACE CARTRIDGE message continues to appear until you replace the print cartridge. HP does not guarantee good print quality if you select CONTINUE after a REPLACE CARTRIDGE condition. Replace the print cartridge as soon as possible to ensure good print quality.
JAM RECOVERY	OFF ON *AUTO	Use this item to tell the printer how to behave if a jam occurs. OFF: The printer does not reprint pages following a jam. Printing performance might be improved with this setting. ON: The printer automatically reprints pages after a jam is cleared. AUTO: The printer automatically selects the best mode for printer jam recovery (usually ON).

Download Free Service Manual at http://printer1.blogspot.com

Table 24. System setup submenu (continued)

Item	Values	Explanation
RAM DISK	OFF *AUTO	Use this item to configure the RAM disk. OFF: The RAM disk is disabled. AUTO: The printer determines the optimal RAM-disk size based on the amount of available memory. **Note** If you change the setting from OFF to AUTO, the printer automatically reinitializes when it becomes idle.
LANGUAGE	*ENGLISH (Selections are available depending on the installed fonts.)	Selects the language for the messages that appear on the printer control-panel display.

Stapler/stacker submenu

This submenu allows you to select settings for the optional stapler/stacker, if one is installed.

Some items on this menu are available in the software program or the printer driver (if the appropriate driver is installed).

The following section lists the settings and their possible values in the **Stapler/stacker** submenu. The default value for each setting is the one that has an asterisk (*) next to it.

Table 25. Stapler stacker submenu

Item	Values	Explanation
STAPLER/STACKER ● STAPLES ● STAPLES OUT	● STAPLES *NONE ONE	Use this item to specify whether or not print jobs are stapled. NONE: Turns off stapling. ONE: Turns on stapling. **Note** Selecting the stapler at the printer control panel changes the default setting to staple. It is possible that all print jobs will be stapled.
	● STAPLES OUT *STOP CONTINUE	Use this item to tell the printer how to behave if the stapler runs out of staples, as indicated by the STAPLER OUT OF STAPLES message on the printer control-panel display. STOP: The printer stops printing until you refill the stapler. CONTINUE: The stapler accepts print jobs if it is out of staples, but the pages will not be stapled. For information about ordering a new staple cartridge, see chapter 8.

Download Free Service Manual at http://printer1.blogspot.com

I/O submenu

Items on the I/O (input/output) menu affect the communication between the printer and the computer. The contents of the I/O submenu depend on which EIO card is installed.

The following section lists the settings and their possible values in the **I/O** submenu. The default value for each setting is the one that has an asterisk (*) next to it.

Table 26. I/O submenu

Item	Values	Explanation
I/O TIMEOUT	5 to 300 (*15)	Select the I/O timeout period in seconds. This setting allows you to adjust timeout for best performance. If data from other ports appear in the middle of your print job, increase the timeout value.
PARALLEL INPUT ● HIGH SPEED ● ADVANCED FUNCTIONS	● HIGH SPEED NO *YES ● ADVANCED FUNCTIONS OFF *ON	Select YES to enable the printer to accept the faster parallel communications that are used for connections with newer computers. Turn the bidirectional parallel communication on or off. The default is set for a bidirectional parallel port (IEEE-1284). The function allows the printer to send status readback messages to the computer. (Turning the parallel advanced functions on might slow language switching.)
EIO [X] JETDIRECT MENU	CFG NETWORK YES NO	The [X] represents the slot in which the optional HP Jetdirect print server is installed, if any. Which of the following submenus appears depends on the type of print server that is installed. Use this item to select CFG NETWORK = YES to access the available submenus listed below.
TCP/IP ● ENABLE ● CONFIG METHOD	● ENABLE OFF *ON ● CONFIG METHOD *BootP DHCP MANUAL	Select whether the TCP/IP protocol stack is enabled or disabled. You can set several TCP/IP parameters. Select the TCP/IP configuration method. For the MANUAL option, set the values for IP ADDRESS, SUBNET MASK, DEFAULT GATEWAY, SYSLOG SERVER, and IDLE TIMEOUT.
IPX/SPX ● ENABLE ● FRAME TYPE	● ENABLE OFF *ON ● FRAME TYPE *AUTO OFF	Select whether the IPX/SPX protocol stack (in Novell NetWare networks, for example) is enabled or disabled. Select whether the frame type is automatically determined or turned off.
APPLETALK ● ENABLE	● ENABLE OFF *ON	Select whether the Apple EtherTalk protocol stack is enabled or disabled.
DLC/LLC ● ENABLE ● LINK SPEED	● ENABLE OFF *ON ● LINK SPEED *AUTO 10T HALF 10T FULL 100TX HALF 100TX FULL	Select whether the DLC/LLC protocol stack is enabled or disabled. Selects the network link speed (10 or 100 Mbps) and the communication mode (full-duplex or half-duplex).

Download Free Service Manual at http://printer1.blogspot.com

4 Printer maintenance

Contents

Cleaning the printer and accessories 54
Cleaning the fuser 55
Running the cleaning page manually 56
To run the cleaning page manually 56
Running the cleaning page automatically 57
To run the cleaning page automatically 57
Cleaning spilled toner 57
Performing preventative maintenance 58
Resetting the maintenance-kit counter 58
Resetting the maintenance-kit counter 58
Expected life of components 59
Maintaining the stapler unit 60
Removing and replacing the stapler unit 60
To remove and replace the stapler unit 60
Loading staples 62
To load staples 62
Downloading a remote firmware update 63

Download Free Service Manual at http://printer1.blogspot.com

Cleaning the printer and accessories

To maintain superior print quality and performance, thoroughly clean the printer and the paper-handling accessories:

- every time you change the print cartridge.
- after printing approximately 10,000 pages.
- whenever print-quality problems occur.

Clean the outside surfaces of the printer and accessories with a water-dampened cloth. Clean the inside parts as indicated in "Cleaning the printer" on page 55. Observe the following warning and caution when cleaning the printer accessories.

WARNING! Before beginning the cleaning steps, turn the printer off and unplug all power cords to avoid shock hazard.

Be careful when cleaning around the fusing assembly area. It might be hot.

CAUTION To prevent permanent damage to the print cartridge, do not use ammonia-based cleaners on or around the printer.

Do not touch the transfer roller (callout 1). Skin oils on the roller can cause print-quality defects. If toner gets on clothing, wipe it off with a dry cloth and wash the clothes in cold water. Hot water sets toner into fabric.

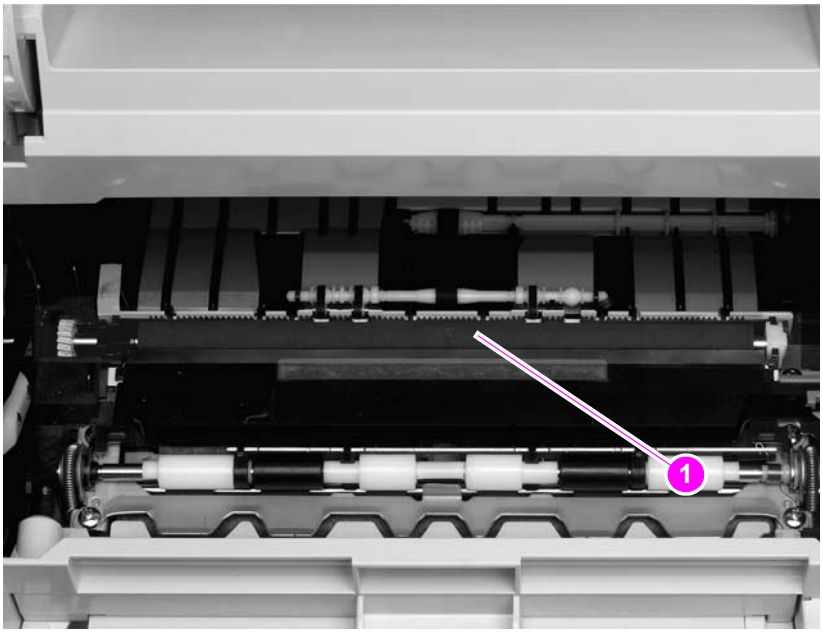

Figure 3. **Location of the transfer roller – *do not touch!***

Download Free Service Manual at http://printer1.blogspot.com

Table 27. Cleaning the printer

Component	Cleaning method/notes
Outside covers	Use a water-dampened cloth. Do not use solvents or ammonia-based cleaners.
Inside	With a dry, lint-free cloth, wipe any dust, spilled toner, and paper particles from the paper-path area, the registration roller, and the print cartridge cavity. Do not touch the transfer roller with bare hands.
Paper-pickup, feed, and separation rollers	Use a water-dampened, lint-free cloth.
Tray 1 separation pad	Use a dry, lint-free cloth.
Registration roller	Use a dry, lint-free cloth.
Transfer roller	Use a dry, lint-free cloth. *Do not touch* the transfer roller.
Fuser	Use a water-dampened, lint-free cloth.

Cleaning the fuser

Run the printer cleaning page to keep the fuser free of toner and paper particles that can sometimes accumulate. Accumulation of toner and particles can cause specks to appear on the front or back side of your print jobs. See "Specks or dots" on page 314.

To ensure optimum print quality, HP recommends that you use the cleaning page every time you replace the print cartridge at an automatic interval that you establish. If you have an optional duplexer installed, you must run the cleaning page manually.

The cleaning procedure takes about 2.5 minutes to complete. A message (either `CREATING CLEANING PAGE` or `CLEANING`) appears on the printer control-panel display during the cleaning processes.

- See "Running the cleaning page manually" on page 56.
- See "Running the cleaning page automatically" on page 57.

Download Free Service Manual at http://printer1.blogspot.com

Running the cleaning page manually

In order for the cleaning page to work properly, print the page on copier-grade paper (not bond, heavy, or rough paper).

Hint If you have an optional duplexer installed, this cleaning method is the only one you can use. To make sure that automatic cleaning option is not selected. To ensure good print quality, run the cleaning page every time the print cartridge is replaced. If you need to run the cleaning page frequently, try using a different type of paper for everyday printing.

To run the cleaning page manually

1. If a duplexer is installed, open the rear output bin.
2. Press the SELECT ( ) button to open the menus.
3. Use the UP ARROW ( ) button or the DOWN ARROW ( ) button to scroll to CONFIGURE DEVICE, and then press the SELECT ( ) button.
4. Use the UP ARROW ( ) button or the DOWN ARROW ( ) button to scroll to PRINT QUALITY, and then press the SELECT ( ) button.
5. Use the UP ARROW ( ) button or the DOWN ARROW ( ) button to scroll to CLEANING PAGE, and then press the SELECT ( ) button.
6. Follow the instructions on the cleaning page to complete the cleaning process.
7. If a duplexer is installed, close the rear output bin.

You might need to create and process a cleaning page more than once. When toner has been cleaned from the fuser assembly, shiny black spots appear on the page's black strip. If white spots appear on the black strip, create and process another cleaning page.

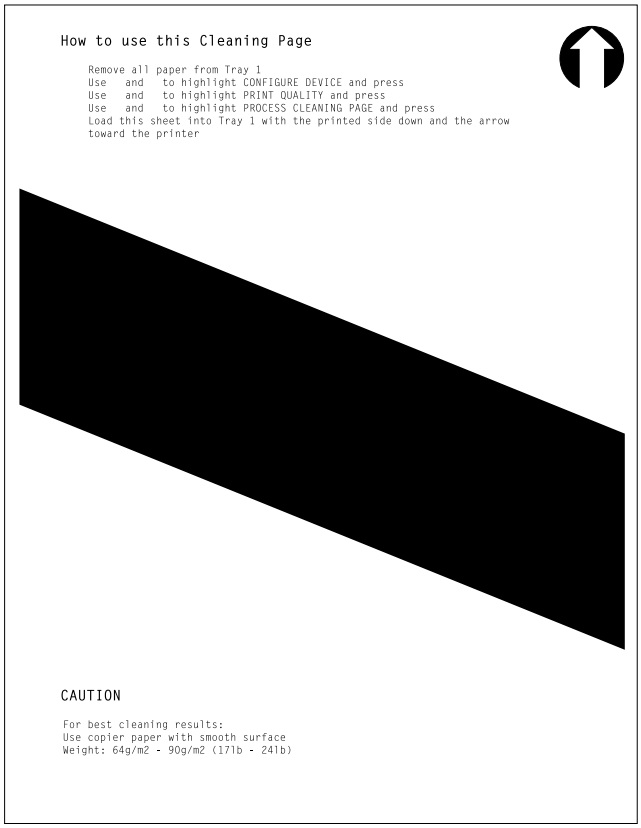
How to use this Cleaning Page

Remove all paper from Tray 1
Use and to highlight CONFIGURE DEVICE and press
Use and to highlight PRINT QUALITY and press
Use and to highlight PROCESS CLEANING PAGE and press
Load this sheet into Tray 1 with the printed side down and the arrow toward the printer

CAUTION

For best cleaning results:
Use copier paper with smooth surface
Weight: 64g/m2 - 90g/m2 (17lb - 24lb)

Figure 2. **Sample cleaning page**

Download Free Service Manual at http://printer1.blogspot.com

Running the cleaning page automatically

Use the following procedure to set the printer to print cleaning pages automatically at an interval that you select. In order for the cleaning page to run without intervention, you must keep the selected size and the plain paper type available in the printer. The printer will not interrupt a printing job in process to run a cleaning page.

Note HP recommends that the cleaning-page interval be set at 2,000 pages (or fewer) to make sure that excess toner is removed from the printer. This ensures good print quality.

If you have an optional duplexer installed, make sure that automatic cleaning option is turned not selected. Run cleaning pages only manually. See "Running the cleaning page manually" on page 56.

To run the cleaning page automatically

1. Press the SELECT ( ) button to open the menus
2. Use the UP ARROW ( ) button or the DOWN ARROW ( ) button to scroll to CONFIGURE DEVICE, and then press the SELECT ( ) button.
3. Use the UP ARROW ( ) button or the DOWN ARROW ( ) button to scroll to PRINT QUALITY, and then press the SELECT ( ) button.
4. Use the UP ARROW ( ) button or the DOWN ARROW ( ) button to scroll to AUTO CLEANING, and then press the SELECT ( ) button.
5. Use the UP ARROW ( ) button or the DOWN ARROW ( ) button to scroll to ON, and then press the SELECT ( ) button.
6. Use the UP ARROW ( ) button or the DOWN ARROW ( ) button to scroll to CLEANING INTERVAL, and then press the SELECT ( ) button.
7. Use the UP ARROW ( ) button or the DOWN ARROW ( ) button to scroll to an interval from 1,000 to 20,000 pages that is appropriate for your use cycle, and then press the SELECT ( ) button to save your selection.
8. Use the UP ARROW ( ) button or the DOWN ARROW ( ) button to scroll to AUTO CLEANING SIZE, and then press the SELECT ( ) button.
9. Use the UP ARROW ( ) button or the DOWN ARROW ( ) button to scroll to the paper size that you want the printer to use for cleaning pages (A4 or LETTER), and then press the SELECT ( ) button to save your selection.

The printer automatically prints a cleaning page at the interval and on the page size that you selected. You can discard the output page that the cleaning process creates.

The printer will not interrupt a printing job in progress to automatically run the cleaning page. The printer will run the cleaning page immediately after the completing job in which the selected cleaning interval occurred.

Cleaning spilled toner

Defective or worn print cartridges can develop leaks. Also, after a jam has occurred, some toner might remain on the rollers and guides inside the printer. The pages that print immediately after the jam might pick up this toner.

Clean spilled toner with a cloth that has been dampened with cold water. Do not touch the transfer roller with the damp cloth or with your fingers. Do not use a vacuum cleaner unless it is equipped with a micro-fine particle filter.

Download Free Service Manual at http://printer1.blogspot.com

Performing preventative maintenance

You should replace certain parts when the PERFORM PRINTER MAINTENANCE message appears on the printer control-panel display. This helps your printer maintain optimum performance.

The maintenance message appears every 200,000 pages. The message can be temporarily cleared for approximately 10,000 pages using the CLEAR MAINTENANCE MESSAGE item on the **Resets** submenu. (See "Control-panel menus" on page 247.) To check the number of pages that the printer has printed since new maintenance-kit components were installed, print either a configuration page (see "Configuration page" on page 241) or a supplies status page (see "Supplies status page" on page 242).

To order the printer maintenance kit, see chapter 8. The kit includes the following components:

- fuser
- rollers (transfer, feed, and separation and tray 1 pickup); rollers for the printer, two 500-sheet feeders and one 1,500-sheet feeder are included in this kit
- installation instructions

Note The printer maintenance kit components are a consumable items that are not typically covered under the original printer warranty or under most extended warranties.

Resetting the maintenance-kit counter

After a maintenance kit is installed, the maintenance-kit counter must be reset. Use the following procedure to reset the maintenance-kit counter.

1. Turn the printer power off.
2. Hold down the SELECT (✓) button, and then turn on the printer power. Continue holding down the SELECT (✓) button until all three printer control-panel lights flash once and then remain on. This might take up to 10 seconds.
3. Press the UP ARROW (▲) button to scroll to NEW MAINTENANCE KIT.
4. Press the SELECT (✓) button to reset the maintenance-kit counter.

Note Perform this procedure only after a maintenance kit has been installed. Do not use this procedure to clear the PERFORM PRINTER MAINTENANCE message temporarily.

Table 28. Maintenance kit part numbers

Part name	Part number	
• 110-V printer kit (HP LaserJet 4200 series)	Q2429A	The maintenance kit contains user-replaceable parts and instructions for printer maintenance. The printer maintenance kit components are consumable items. (Typically the associated components are not covered under the original warranty or most extended warranty options).
• 110-V printer kit (HP LaserJet 4300 series)	Q2436A	
• 220-V printer kit (HP LaserJet 4200 series)	Q2430A	
• 220-V printer kit (HP LaserJet 4300 series)	Q2437A	

Download Free Service Manual at http://printer1.blogspot.com

Expected life of components

The following table shows the expected life of certain components in the printer. To order parts, see chapter 8.

Table 29. Component life expectancies and part numbers

Part name	Part number	Exchange number	Expected life
Tray 1 feed roller	RL1-0019-000CN	none	100,000 pages
Tray 1 separation pad	RL1-0007-000CN	none	200,000 pages
Tray 1 solenoid	RH7-5357-000CN	none	200,000 pages
Feed and separation rollers (trays 2, 3, and 4)	RM1-0037-000CN	none	200,000 pages
Fuser			
HP LaserJet 4200 110-V	RM1-0013-000CN	Q2425-69004	200,000 pages
HP LaserJet 4300 110-V	RM1-0101-000CN	Q2431-69005	200,000 pages
HP LaserJet 4200 220- V	RM1-0014-000CN	Q2425-69005	200,000 pages
HP LaserJet 4300 220- V	RM1-0102-000CN	Q2431-69006	200,000 pages
Transfer roller	RL1-0044-000CN	none	200,000 pages
Main cooling fan	RH7-1573-000CN	none	25,000 hours
Cooling fan (right-side; HP LaserJet 4300)	RH7-1577-000CN	none	25,000 hours
Duplexer exhaust fan	RH7-1443-000CN	none	25,000 hours
Stapler unit	Q2443-67903	none	50,000 staple operations

Note If an HP LaserJet 4200/4300 printer component is not listed in table 28, the component should last for the life of the printer.

Download Free Service Manual at http://printer1.blogspot.com

Maintaining the stapler unit

Removing and replacing the stapler unit

Use this procedure to replace a defective stapler unit in the optional stapler/stacker.

To remove and replace the stapler unit

1. Locate the stapler unit on the right side of the stapler/stacker.
2. Rotate the stapler unit toward the front of the printer until the unit clicks. Hold the stapler unit in this open position.
3. Push down on the tab at the top of the stapler unit.
4. Hold the tab down and pull the stapler unit up and out of the stapler/stacker.
5. Disconnect the cable that connects the stapler unit to the stapler/stacker. (Only the blue part detaches.)

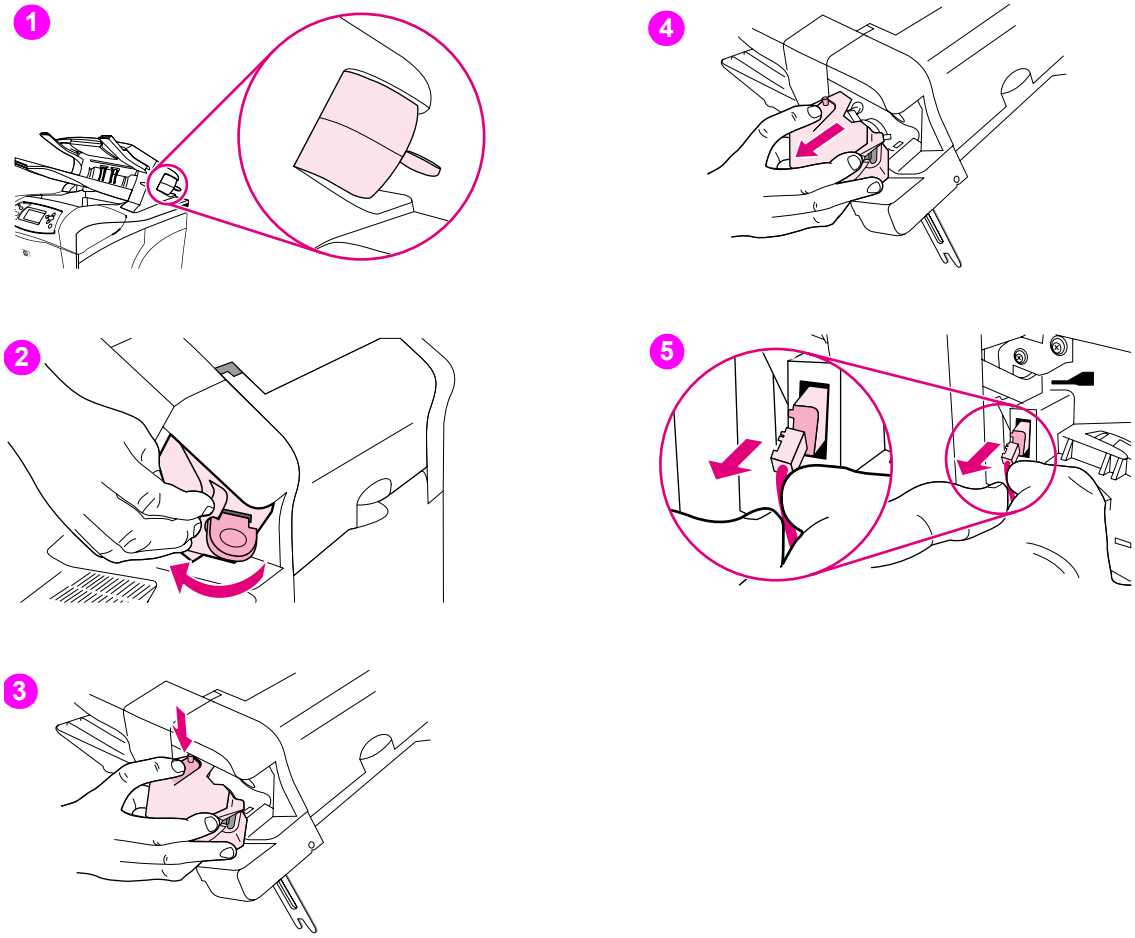

Figure 3. **Replacing the stapler unit (1 of 2)**

Download Free Service Manual at http://printer1.blogspot.com

6. Remove the new stapler unit from its packaging.
7. Connect the cable on the new stapler unit to the stapler/stacker.
8. Place the pivot pin that is located on the bottom of the new stapler unit into the hole in the stapler/stacker (located in the cavity that was created when the staple unit was removed earlier in this procedure).
9. Press down on the tab at the top of the stapler unit and push the unit into the stapler/stacker.
10. Rotate the stapler unit toward the rear of the printer until the unit clicks into place.
11. If the stapler cartridge is not installed in the stapler unit, install it now. (See "To load staples" on page 62.)

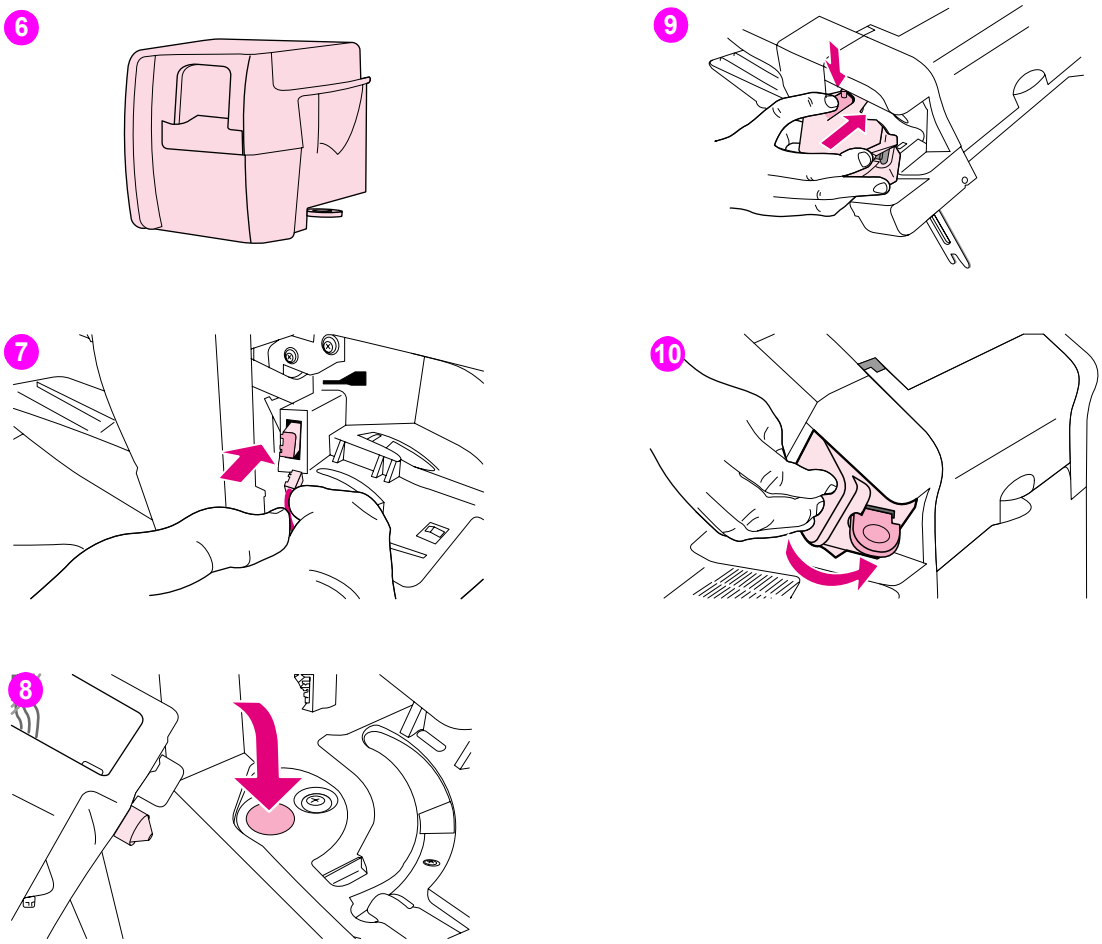

Figure 4. **Replacing the stapler unit (2 of 2)**

Download Free Service Manual at http://printer1.blogspot.com

Loading staples

Load staples if the printer control panel display prompts you with a `STAPLER LOW ON STAPLES` message (the staple cartridge contains fewer than 70 staples) or a `STAPLER OUT OF STAPLES` message (the staple cartridge contains 15 or fewer staples). For more information see "Staple level detection" on page 116. Once the stapler runs out of staples, jobs may continue to print to the stapler/stacker (if `STAPLES OUT = CONTINUE`), but they will not be stapled. For more information see "Stapler/stacker submenu" on page 51.

To load staples

1. Turn the stapler unit on the right side of the stapler/stacker toward the front of the printer until the unit clicks into the open position. Grasp the blue staple-cartridge handle and pull the cartridge out of the stapler unit.
2. Insert the new staple cartridge into the stapler unit and rotate the stapler unit toward the rear of the printer until the unit snaps into place.

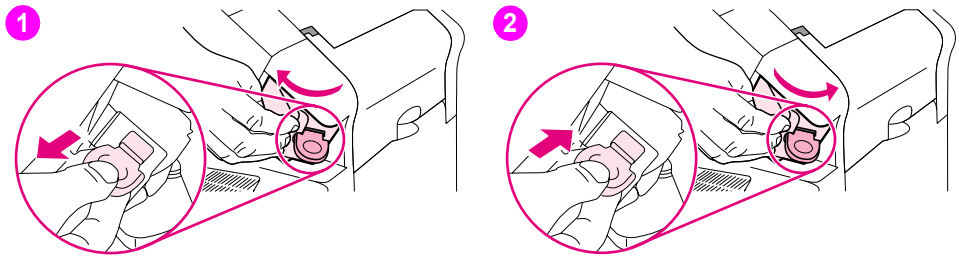

Figure 5. **Loading staples in the staple cartridge (stapler/stacker only)**

Download Free Service Manual at http://printer1.blogspot.com

Downloading a remote firmware update

Note Not all HP LaserJet 4200/4300 printers support remote firmware updates.

A remote firmware update (RFU) can be downloaded from http://www.hp.com/go/lj4200_firmware or http://www.hp.com/go/lj4300_firmware. The RFU file on the website is a self-extracting .EXE file. Downloading a RFU is similar to downloading printing-system software and printer drivers.

These web sites also features an “E-mail me when new software is available” link. This feature notifies you by e-mail when a new RFU version is available for the printer. If you used HP WebReg to register your printer, you are automatically sent an e-mail notification when a new RFU version is available for your printer.

The RFU process consists of three steps:

1. Determine the version of firmware that is currently installed (print a configuration page; see “Configuration page” on page 241). Look for the version information in the device information section of the configuration page.
2. Go to http://www.hp.com/go/lj4200_firmware or http://www.hp.com/go/lj4300_firmware and download the update.
3. Install the update.

Note For more information about RFUs, contact your HP Customer Care Center and ask for a software technical reference sheet.

Download Free Service Manual at http://printer1.blogspot.com

Download Free Service Manual at http://printer1.blogspot.com

5 Theory of operation

Contents

Introduction 67
Basic operation of the printer. 67
Printer operating sequence 67
Control system overview 68
Pickup and feed system overview 68
Laser/scanner system overview 68
Image formation system overview 68
General descriptions 69
DC controller PCA 69
Motor and fan control 70
Power supply 71
Fuser-control circuit 71
Fuser over-temperature protection. 72
High-voltage circuit. 73
Low-voltage circuit 74
Overcurrent/overvoltage protection 75
Toner detection 75
Cartridge detection 75
Cartridge memory. 75
Laser/scanner assembly 76
Laser/scanner control. 77
Paper pickup system. 78
Paper pickup and feed block 79
Printing from tray 1 80
Printing from tray 2 82
Tray 2, 500-, 1,500-sheet feeder media size detection 83
Lifter-driver operation 84
Multiple feed prevention 84
Media skew prevention 85
Fixing/delivery block 86
Printer jam detection 87
Printer pickup delay jam from tray 1. 87
Printer pickup delay jam from tray 2. 87
Printer pickup stationary jam 87
Printer delivery wrap jam when feeding regular media 88
Printer delivery wrap jam when feeding non-regular media 88
Printer delivery delay jam 88
Printer door open jam. 89
Printer residual media jam 89
Printing from the 500-sheet feeder 90
500-sheet feeder pickup and feeding 90
Printing from the 1,500-sheet feeder 92
1,500-sheet feeder pickup and feeding 92
1,500-sheet feeder lifting mechanism 94

Download Free Service Manual at http://printer1.blogspot.com

Envelope feeder 95
Envelope feeder pickup and feeding 96
Envelope feeder jam detection 97
Envelope feeder pickup delay jam 97
Envelope feeder pickup stationary jam 97
Duplexer 98
Reversing and duplexer pickup 99
Duplexer jam detection 100
Stacker and stapler/stacker 101
Stacker 103
Stacker feed and delivery 104
Stacker jam detection 105
Stacker feed jam 105
Stacker feed stationary jam 105
Stacker residual media jam 105
Stapler/stacker 106
Stapler/stacker feed and delivery 107
Staple mode feed and delivery 109
Stapler unit 113
Stapler unit operation 114
Staple level detection 116
Stack mode feed and delivery 116
Stapler/stacker jam detection 117
Stapler/stacker feed jam 117
Stapler/stacker feed stationary jam 117
Stapler/stacker delivery jam 117
Stapler/stacker residual media jam 117
Image-formation system 118
Electrostatic latent-image formation 120
Primary charging 120
Writing the image 121
Developing the image 122
Transferring the image 123
Fusing the image 124
Cleaning the transfer charging roller and photosensitive drum . . 125
Print cartridge memory chip 126
Formatter system 127
PowerSave 127
Resolution Enhancement technology 127
EconoMode 128
Input/output 128
Parallel interface 128
Expanded I/O 128
Flash 128
Hard-disk accessory 128
CPU 128
Printer memory 129
Read-only memory 129
Random-access memory 129
DIMM slots 129
Firmware DIMM 129
Nonvolatile memory 129
Memory Enhancement technology 129
PJL overview 130
PML 130
Control panel 130

Download Free Service Manual at http://printer1.blogspot.com

Introduction

This chapter presents an overview of the relationships between major components in the printer. It also provides a general description of the following:

- Basic operation of the printer
- Power supply
- Laser/scanner assembly
- Image formation
- Paper pickup and feeding
- 500-sheet feeder operation
- 1,500-sheet feeder operation
- Envelope feeder
- Duplexer
- Stacker and stapler/stacker

Basic operation of the printer

Printer operation can be divided into four systems. The control system (which includes the power supply and DC controller PCA), the pickup and feed system (which consists of various rollers and transports the media through the printer, the laser/scanner system (which forms the latent image on a photosensitive drum), the image formation system (which transfers a toner image onto the print media), and.

Printer operating sequence

The operating sequence is controlled by a microprocessor on the DC controller PCA. The table in this section describes the basic operating sequence from when the printer power is turned on until the final printed page is delivered to an output bin. For information about the timing of the basic operating sequence, see "HP LaserJet 4200 general timing diagram" on page 357 and "HP LaserJet 4300 general timing diagram" on page 358.

Table 30. Basic printer operating sequence

Period (sequence)	Description
Waiting	This is the period of time from when the printer power is turned on until the main motor or drum motor (HP LaserJet 4300 only) begins to rotate. During this time the transfer roller is cleaned and the microprocessor on the DC controller PCA checks to determine if a print card ridge is installed in the printer.
Standby	This is the period of time from the end of the waiting sequence until the print command is input from the host computer, *or* from the end of the last rotation is input from the sequence (described below) until a print command host computer, *or* until the printer power is turned off. The message READY appears on the control-panel display.
Initial rotation	This is the period of time when the photosensitive drum is stabilized to prepare for printing.
Print	This is the period of time from the initial rotation until control system detects the page entering the printer (the page is detected by the top of page sensor (PS103).
Last rotation	This is the period of time from the completion of the print job until the main motor or drum motor (HP LaserJet 4300 only) stops. The final page of the job is delivered to an output bin and the transfer roller is cleaned. If another print job is immediately detected (sent by the host computer) the printer returns to the initial rotation period. If no print jobs are waiting, then the printer returns to the standby period.

Download Free Service Manual at http://printer1.blogspot.com

Control system overview

The control system consists of the power supply and the DC controller PCA. It controls the pickup and feed, laser/scanner, and image formation systems. The microprocessor on the DC controller PCA controls the operating sequence of the printer.

When the printer power is in the standby sequence (see table 30 on page 67), direct current power (dc voltage) is supplied to the DC controller PCA by the power supply. When the printer is in the standby sequence (see table 30 on page 67) the microprocessor on the DC controller PCA sends signals to turn on and off various solenoids, motors, and other printer components needed to process and print the image data input by the host computer.

Pickup and feed system overview

The pickup and feed system consists of a motor, various rollers, and sensors that detect the presence of media, transport the media into and through the printer, and deliver the media to an output bin.

If during the transport process, the media does not reach specific sensors in a specified time, the microprocessor on the DC controller PCA halts the motor and a jam message appears on the control-panel display.

Laser/scanner system overview

The laser/scanner system forms a latent (or potential) image on a photosensitive drum according to signals sent from the microprocessor on the DC controller PCA.

The main components of the laser/scanner assembly are the laser driver PCA, the scanner motor and a six-sided mirror. The DC controller PCA sends image data signals to the laser/scanner assembly. The laser/scanner PCA converts these data signals into a laser beam of light. The laser beam of light is reflected by the six-sided mirror onto a photosensitive drum (in the print cartridge) and a latent image of the image to be printed is created.

Image formation system overview

The image formation system uses toner in the print cartridge to transfer the latent image on the the photosensitive drum to the media. Heat and pressure (from the fuser) are used to permanently bond the toner image to the media.

The photosensitive drum (in the print cartridge) receives a uniform negative primary charge that will be exposed to the laser beam of light.

The photosensitive drum is exposed to the laser beam and an electrostatic latent image is created on the drum (this image is invisible to your eye) by the laser neutralizing specific areas of the drum's surface. When the areas exposed to the laser beam come in contact with toner, the toner is attracted to them (now the image can be seen on the drum).

The transfer roller applies a positive charge to the back of the media. As the media passes the photosensitive drum the toner image is attracted to the media and transfers from the drum to the media.

The media then passes through the fuser where heat and pressure are applied to permanently bond the toner to the media.

Download Free Service Manual at http://printer1.blogspot.com

General descriptions

This section describes individual components found in the printer. Information is provided about the following components.

- DC controller PCA
- Power supply assembly
- Pickup and feed assembly
- Laser/scanner assembly
- Image formation system
- 500-sheet feeder
- 1,500-sheet feeder
- envelope feeder
- Duplexer
- Stacker and stapler/stacker

DC controller PCA

The DC controller PCA controls the operation of the printer and its components. The DC controller PCA starts printer operation when the printer power is turned on and the power supply sends dc voltage to the DC controller PCA. After the printer enters the standby sequence (see table 30 on page 67. the DC controller PCA sends out various signals to operate motors, solenoids and other printer components based on the print command and image data sent by the host computer. For a list of DC controller PCA connectors, see figure 233 on page 356.

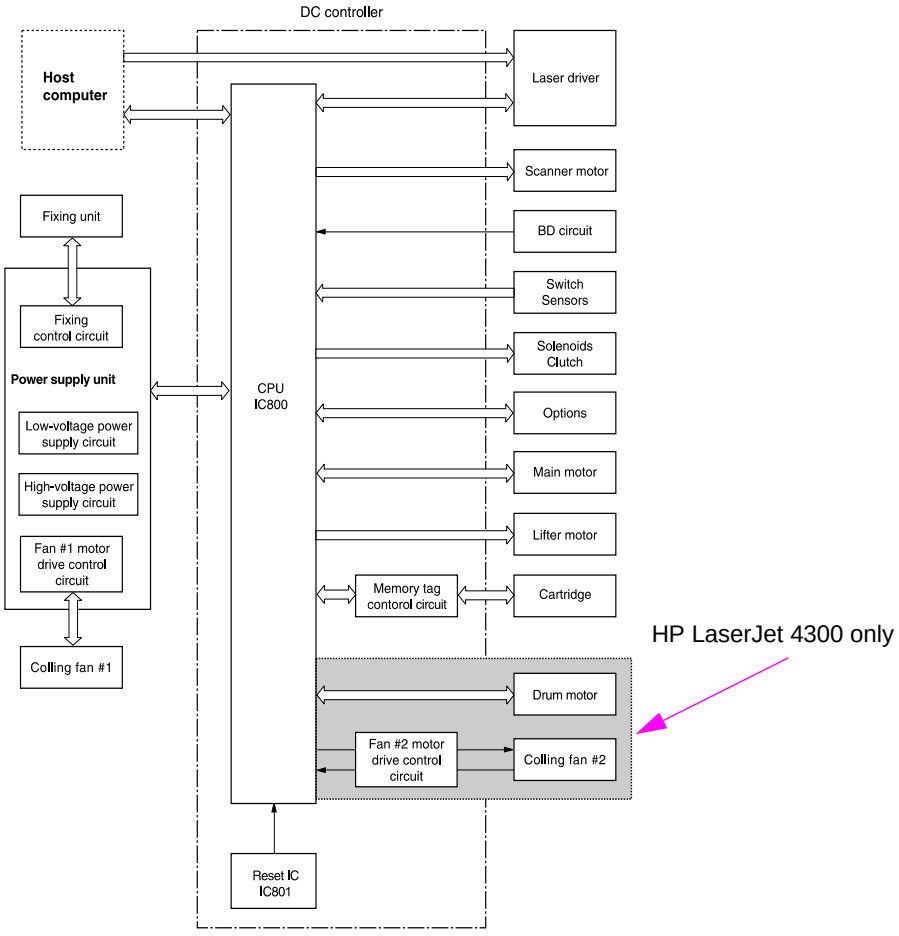

Figure 6. **DC controller PCA block diagram**

Download Free Service Manual at http://printer1.blogspot.com

Motor and fan control

The HP LaserJet 4200 printer has three dc brushless motors. The main motor, the lifter driver motor (inside of the lifter driver assembly), and a fan motor. The main motor is used for image formation (rotating the photosensitive drum in the print cartridge) and paper pickup and feed. The lifter motor raises the plate in the tray cassette. The fan motor rotates the fan blades.

The HP LaserJet 4300 printer has five dc brushless motors. The main motor, the print cartridge motor, the lifter motor, and two fan motors. the main motor is used for paper pickup and feed. The print cartridge motor rotates the photo sensitive drum (the photosensitive drum used in the larger HP LaserJet 4300 print cartridge is heavier than the one used in the HP LaserJet 4200 printer). The lifter motor raises the plate in the tray cassette. Two fan motors rotate the left- and right-side fans.

The DC controller PCA controls the operation of the motors and fans.

Table 31. Printer fans and motors

Motor names		Purpose	Type	Rotation	Speed	Failure detection
Motor	Main motor (M101) HP LaserJet 4200	Drives the tray cassette pickup roller, feed/ separation roller, tray 1 pickup roller, pre-transfer roller, photosensitive drum, developing cylinder, pressure roller, and output delivery roller	dc motor	Counter clockwise	2-speed (full and half)	Yes
	Main motor (M101) HP LaserJet 4300	Drives the tray cassette pickup roller, feed/ separation roller, tray 1 pickup roller pre-transfer roller, pressure roller, and output delivery roller.	dc motor	Counter clockwise	2-speed (full and half)	Yes
	Print cartridge motor (M102) HP LaserJet 4300	Drives the transfer charging roller, photosensitive drum, and developing cylinder.	dc motor	Counter clockwise	2-speed (full and half)	Yes
	Lifter motor (M103) HP LaserJet 4200 HP LaserJet 4300	Moves the tray cassette lifting plate up and down.	dc motor	Counter clockwise	1-speed	Yes
Fan	Left-side cooling fan (FN101) HP LaserJet 4200 HP LaserJet 4300	Cools the inside of the printer	dc motor	NA	2-speed (full and half)	Yes
	Right-side cooling fan (FN102) HP LaserJet 4300	Cools the inside of the printer.	dc motor	NA	1-speed	Yes

Download Free Service Manual at http://printer1.blogspot.com

Power supply

The power supply consists of the fuser-control circuit, the high-voltage circuit, and the low-voltage circuit. The fuser-control and high-voltage circuits control the temperature of the fuser and generate high-voltage according to signals from the DC controller PCA. The low-voltage circuit generates the dc voltages used by other components in the printer (for example the DC controller PCA, the motors, and fans).

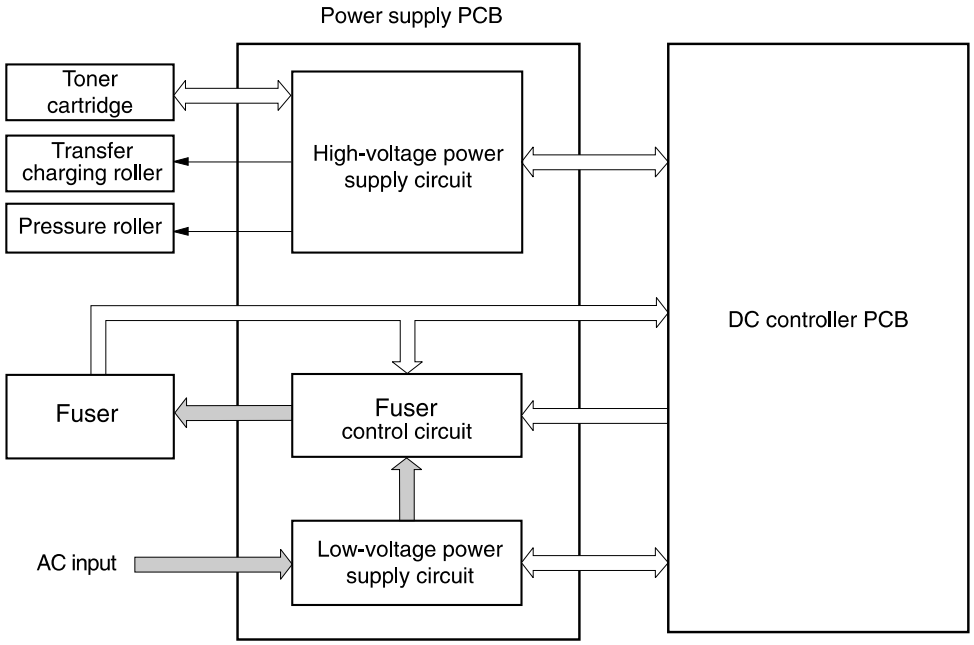

Figure 7. **Power supply block diagram**

Fuser-control circuit

The fuser-control circuit controls the fuser's components. The two fuser heaters provide the high temperatures which cause the toner to be permanently bonded to the media. The fuser thermistor is used to monitor the fuser temperatures. The thermal switch detects abnormally high fuser temperatures and interrupts the supply of voltage to the fuser if the temperature is determined to be too high.

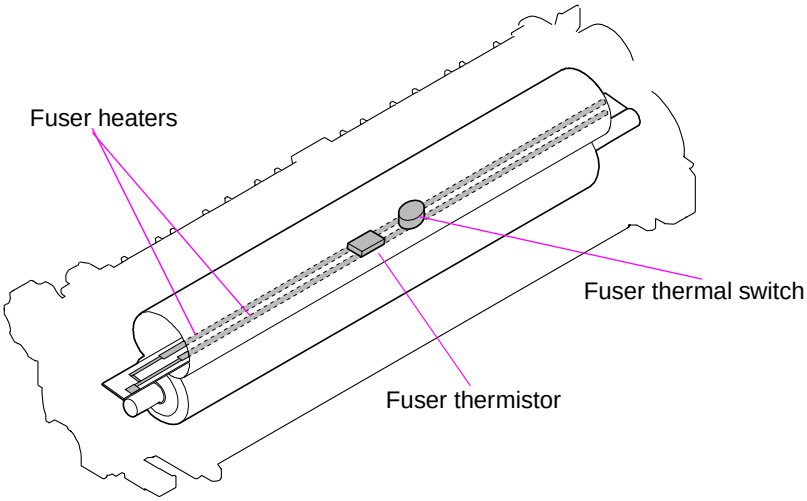

Figure 8. **Fuser components**

Download Free Service Manual at http://printer1.blogspot.com

Fuser over-temperature protection

The fusing heater safety circuit is located on the power supply and constantly monitors the fusing temperature.

To protect the fuser from excessive temperatures, the printer has the following three protective functions:

- The CPU monitors the voltage of the thermistor. If the fuser temperature reaches 240° C (464° F) or higher, the CPU turns off the relay (RL101) to interrupt the power to the fusing heater.
- If the temperature of the fusing heater continues to rise abnormally and the temperature of the thermistor (TH1) exceeds about 250° C (482° F), the relay 1 (RL101) opens up to cut off the power supply to the fusing heater.
- When the temperature of the heater exceeds about 250° C (482° F), the thermal switch (TP1) is turned off to cut off the power supply to the fusing heater

.

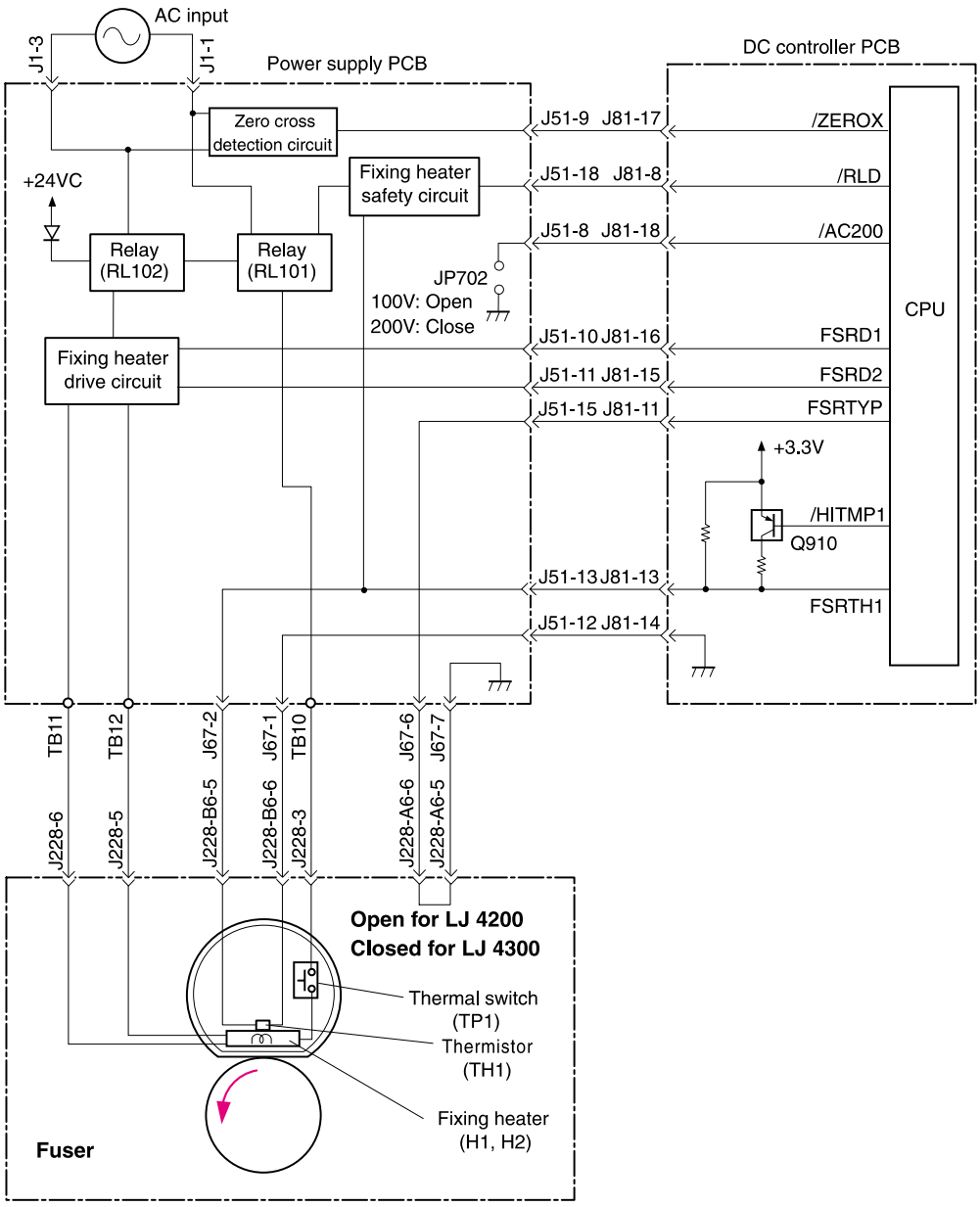

Figure 9. **Fuser over-temperature protection circuit block diagram**

Download Free Service Manual at http://printer1.blogspot.com

High-voltage circuit

The high-voltage circuit produces the voltage biases that are applied to the primary charging roller, the developing cylinder, the transfer charging roller, and the pressure roller.

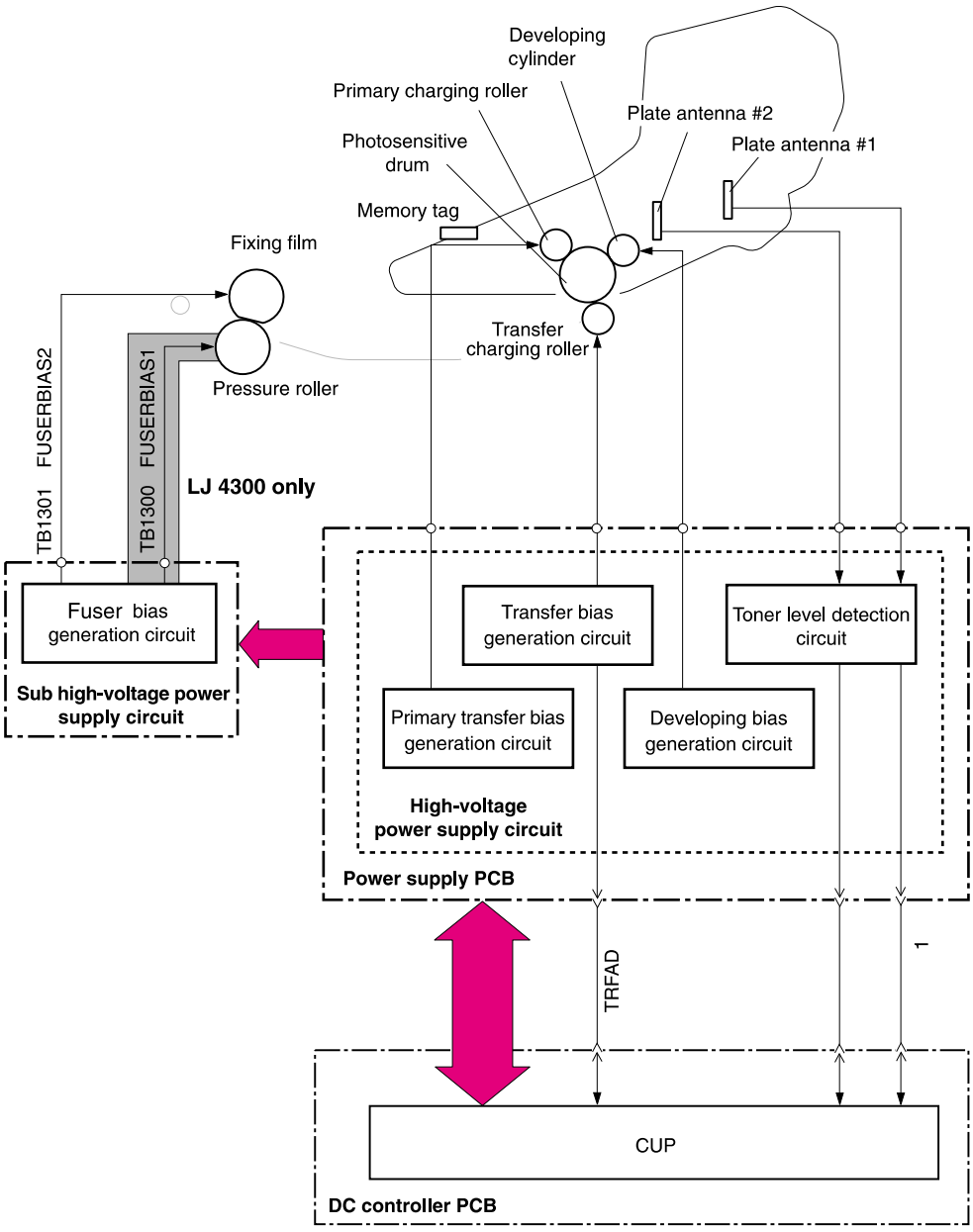

Figure 10. **High-voltage circuit block diagram**

The primary charging voltage (bias) applies a uniform negative charge to the photosensitive drum in the print cartridge. There are two types of primary charging biases. The primary charging dc negative voltage and the primary charging ac bias. Both biases are generated by the high-voltage circuit on the power supply. These biases are superimposed on one another and then applied to the primary charging roller which will transfer the biases to the drum. The laser/scanner assembly generates the electrostatic image on the primary charged photosensitive drum. See "Image formation system overview" on page 68. The electrostatic image cannot be seen until toner is deposited on the drum.

Download Free Service Manual at http://printer1.blogspot.com

The developing voltage (bias) causes the toner to adhere to the electrostatic image that the laser/scanner assembly created on the photosensitive drum. There are two types of developing biases. The developing dc negative bias and the developing ac bias. Both biases are generated by the high-voltage circuit on the power supply. These biases are superimposed on one another and then applied to the primary charging roller which will transfer the biases to the drum. The biased developing cylinder picks up toner particles and deposits them onto the electrostatic image on the photosensitive drum. The image is now visible on the drum.

The transfer voltage (bias) allows the toner image on the photosensitive drum to transfer to the media. There are two types of developing biases. The transfer dc positive bias and the dc negative bias. Both biases are generated by the high-voltage circuit on the power supply. Transfer dc positive bias is applied to the transfer roller during the toner transfer process. Transfer dc positive bias is applied to the transfer roller during the transfer roller cleaning process. The dc positive bias attracts the toner to the media (this transfers the toner image on the photosensitive drum to the media). The dc negative bias is used to clean residual toner off of the transfer roller.

The fuser voltage (bias) prevents toner on the media from sticking to the fuser's pressure roller.

For the HP LaserJet 4200 there is one type of fuser bias. A dc positive bias is generated by the sub high-voltage circuit on the power supply. The dc positive bias is applied to the pressure roller in the fuser.

For the HP LaserJet 4300 there are two types of fuser biases. The fuser dc positive bias and a dc negative bias. Both biases are generated by the sub high-voltage circuit on the power supply. The dc positive bias is applied to the pressure roller in the fuser. The dc negative bias is applied to the fixing film in the fuser.

Low-voltage circuit

The low-voltage circuit converts the ac power from the power source (the wall receptacle the printer's power cord is plugged into) into the direct current voltage (vdc) used by printer components (like the motors and fans). The ac voltage is converted into +24 vdc, +5 vdc, and +3.3 vdc. The +24 vdc voltage is supplied to printer components like the main motor, laser/scanner assembly motor, solenoids and clutches. The +5 vdc voltage is supplied to the laser/scanner assembly. The +3.3 vdc is supplied to the sensors and the DC controller PCA.

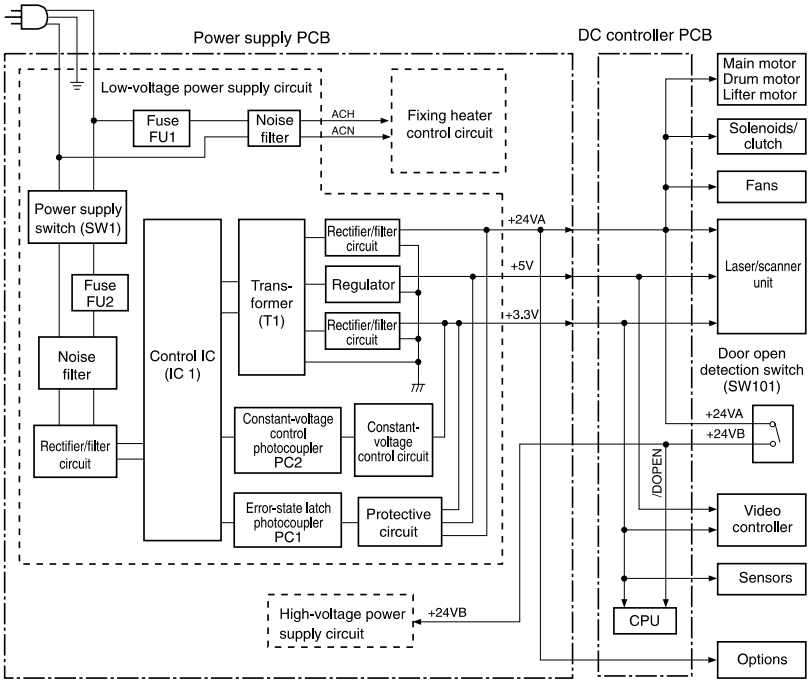

Figure 11. **Low-voltage circuit block diagram**

Download Free Service Manual at http://printer1.blogspot.com

Overcurrent/overvoltage protection

If a short-circuit or other problem on the load side causes an excessive current flow or generates abnormal voltage, the overcurrent/overvoltage protection systems automatically cut off the output voltage to protect the power supply circuit.

If the overcurrent or overvoltage protection system are activated and the power supply circuit does not generate dc voltage, it is necessary to turn the power off, correct the problem, and then turn the printer on again.

The circuit has two fuses (FU1, FU2), which break and cut off the output voltage if overcurrent flows through the ac line.

Toner detection

To monitor the toner level, the printer uses two plate antennas and a toner level circuit in the high-voltage power supply circuit (see figure 10 on page 73). Toner level detection is performed by the DC controller PCA which monitors the output signal of this circuit. The signal is fed back to the DC controller PCA from the antennas during the wait and standby operating periods (see table 30 on page 67). The DC controller PCA detects toner level from 1 percent to 100 percent. If the toner is detected as being low, a message will appear on the control-panel display (see “Alphabetical printer messages” on page 258).

Cartridge detection

The presence of the cartridge is detected using information stored in plate antenna 2 and the print cartridge memory tag (see “High-voltage circuit block diagram” on page 73). The DC controller PCA detects the presence (or lack of) the print cartridge during the wait operating sequence ((see table 30 on page 67).

Cartridge memory

This memory is built-in EEPROM in the cartridge, so that the printer is capable of detecting the cartridge conditions.

Read/write of the cartridge memory is performed by the memory controller board through the antenna unit. The cartridge information read by the memory controller is updated by the DC controller PCA and written to the memory. The read/write of the memory is implemented when the memory controller board receives a command from the DC controller PCA. The DC controller PCA instructs the memory controller to perform read/write at the following timing.

Reading timing

- When the power is turned on
- When the door is closed
- When the DC controller PCA receives a command from the formatter

Writing timing

- When printing is completed
- When the DC controller PCA receives a command from the formatter

The memory data sent from the memory controller also contains the error status that has occurred during read/write operation. When error status is sent, the DC controller PCA attempts to read the operation four times. If the error status is not cleared after the operation, the DC controller PCA determines one of the following error conditions: sub-CPU failure, memory data abnormality, or memory access abnormality.

Do not remove the toner cartridge when the top cover interlock is overridden. Cartridge memory will be disabled.

Download Free Service Manual at http://printer1.blogspot.com

Laser/scanner assembly

The laser/scanner produces the latent electrostatic image on the photosensitive drum in the print cartridge.The main components of the laser/scanner assembly are the laser driver PCA, the scanner motor, various mirrors, and the focusing lenses.

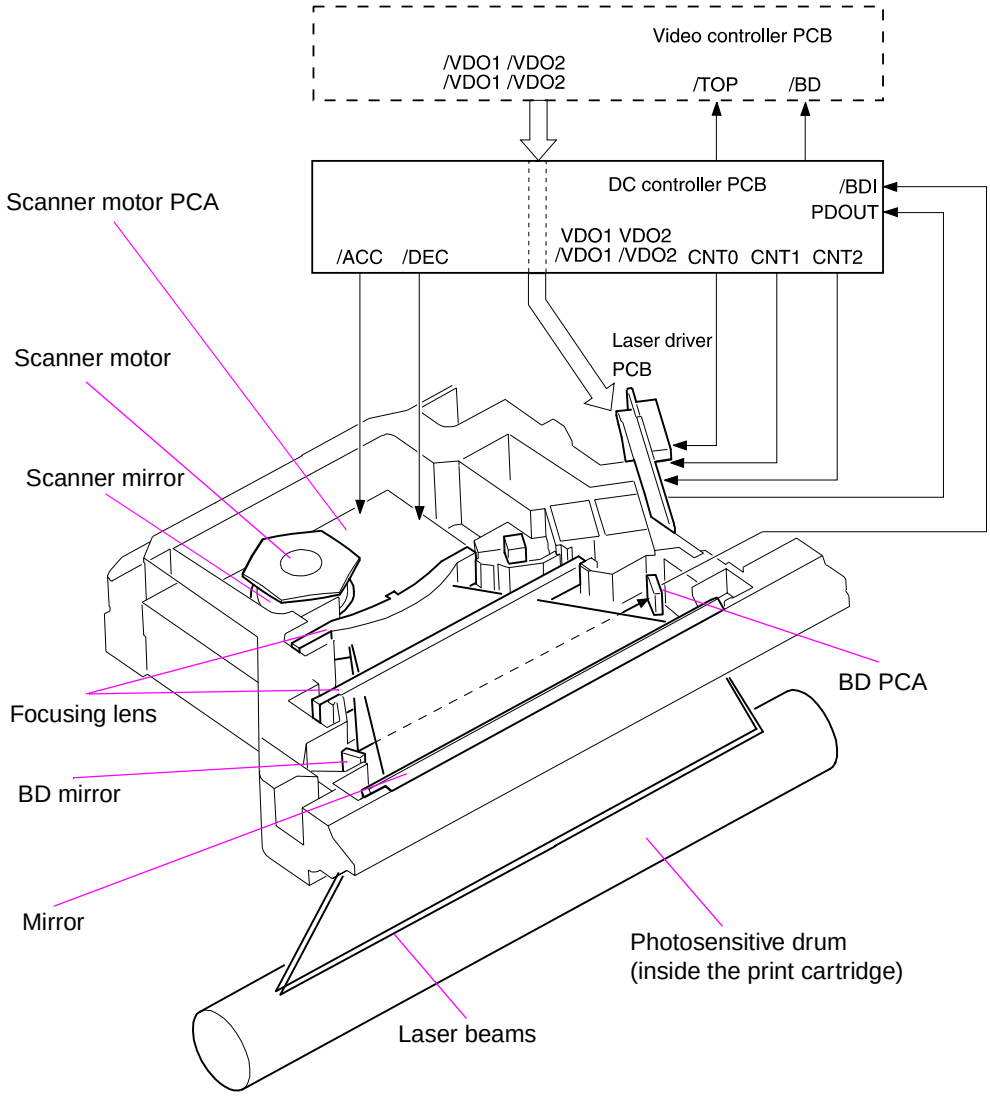

Figure 12. **Laser/scanner assembly**

The laser scanner uses two laser diodes to scan two lines simultaneously producing high speed laser scanning. After receiving the print command from the host computer, the DC controller PCA activates the scanner motor which rotates the six-sided scanner mirror. The laser driver PCA emits light from the two laser diodes according to signals from the DC controller PCA. The two laser beams strike the six-sided scanning mirror and are directed through the focusing lenses and down onto the photosensitive drum. The modulated laser beams generate the latent electrostatic image on the photosensitive drum according to the image data signals received from the DC controller PCA.

Download Free Service Manual at http://printer1.blogspot.com

Laser/scanner control

The laser/scanner control circuit on the laser driver PCA turns the laser diodes on an off according to image data signals received from the DC controller PCA. The DC controller PCA sends image data signals VD01/VD01,VD02, and /VD02 and the laser control signals CNT0, CNT1, and CNT2 to the logic circuit on the laser driver PCA. The laser control signals control laser emission, automatic power control (APC), horizontal synchronization control, and image mask control.

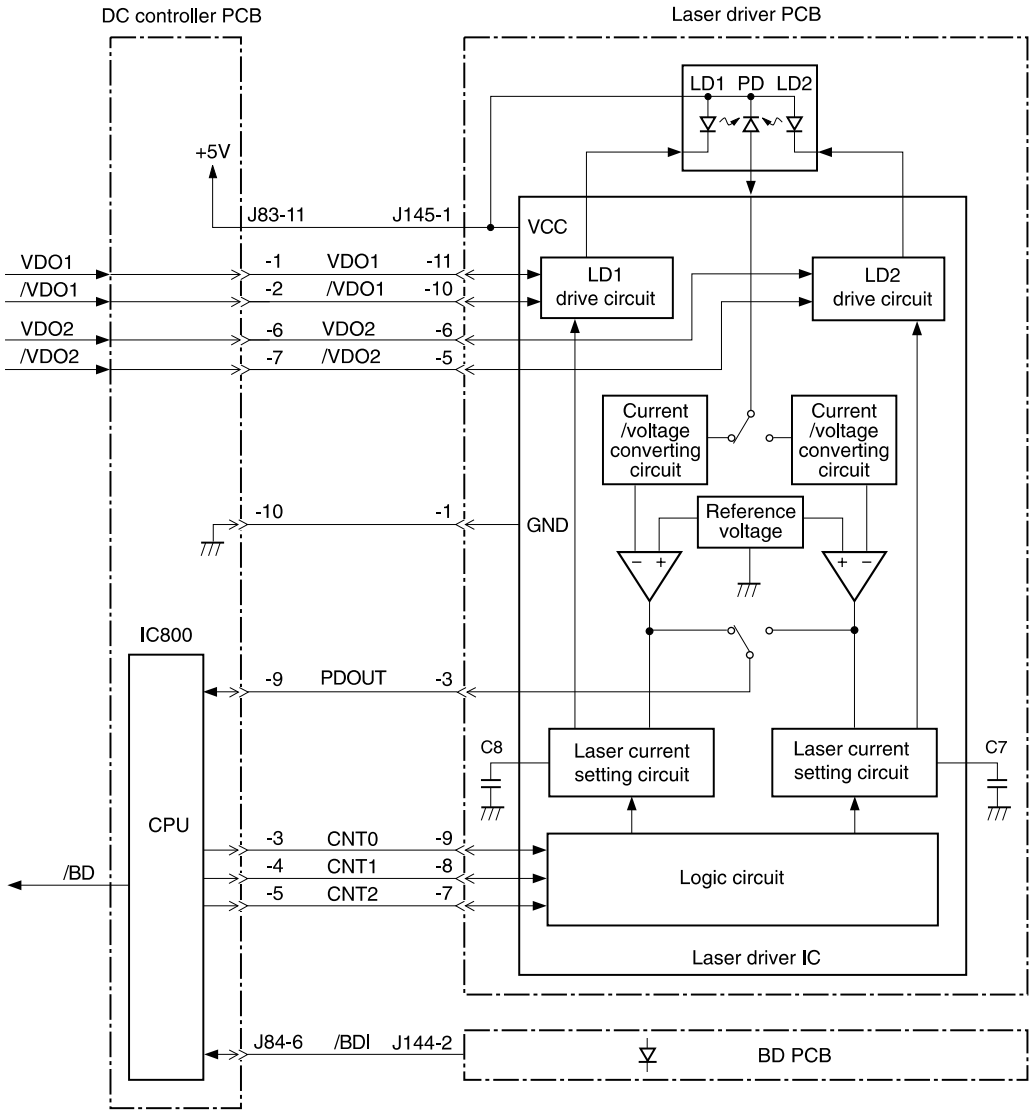

Figure 13. **Laser control circuit block diagram**

Laser emission control is simply turning the laser diodes on and off. Automatic power control is used to limit the amount of light that is emitted from the laser diodes. Horizontal synchronization control is used to determine the starting position for the images horizontal direction. Image mask control is used to avoid laser beam emission on the non-imaging areas of the drum (about 5mm down the vertical edges and 8mm at the top and bottom)

Download Free Service Manual at http://printer1.blogspot.com

Paper pickup system

The paper pickup and feed system consists of various kinds of pickup and feed rollers that are driven by the printer's motor(s). The printer uses tray 1 (the manual feeding tray) and a cassette in tray 2 as media sources. The printed media is delivered to either the rear output bin (straight through printing) or the top output bin (the default destination). Two additional 500-sheet feeders and one 1,500-sheet feeder can be added to the printer. These accessories are discussed further along in this chapter.

Media is detected in tray 1 by the tray 1 paper sensor (on the tray 1 pickup assembly; PS105). The media is detected in tray 2 by the tray 2 paper sensor (PS101). The paper size sensor (PS106) and the paper size switch (SW102) detect the media that is loaded in the tray 2 cassette.

All of the rollers in the printer are driven by two motors, a clutch, and a solenoid which are controlled by the DC controller PCA (for the HP LaserJet 4300 has three motors). See "Motor and fan control" on page 70.

The pre-feed, top of page, and fuser assembly delivery sensor (PS102, PS103, PS108) detect arrival and passing of media along the paper path. If the paper does not reach or pass these sensors within a specific amount of time the microprocessor on the DC controller PCA halts the printer functions and a jam error message will appear on the control-panel display. See "Alphabetical printer messages" on page 258 and "Numerical printer messages" on page 274.

For information about the location of printer switches, sensors, and motors see "Printer switches and sensors" on page 336 and "Printer motors and fans" on page 337.

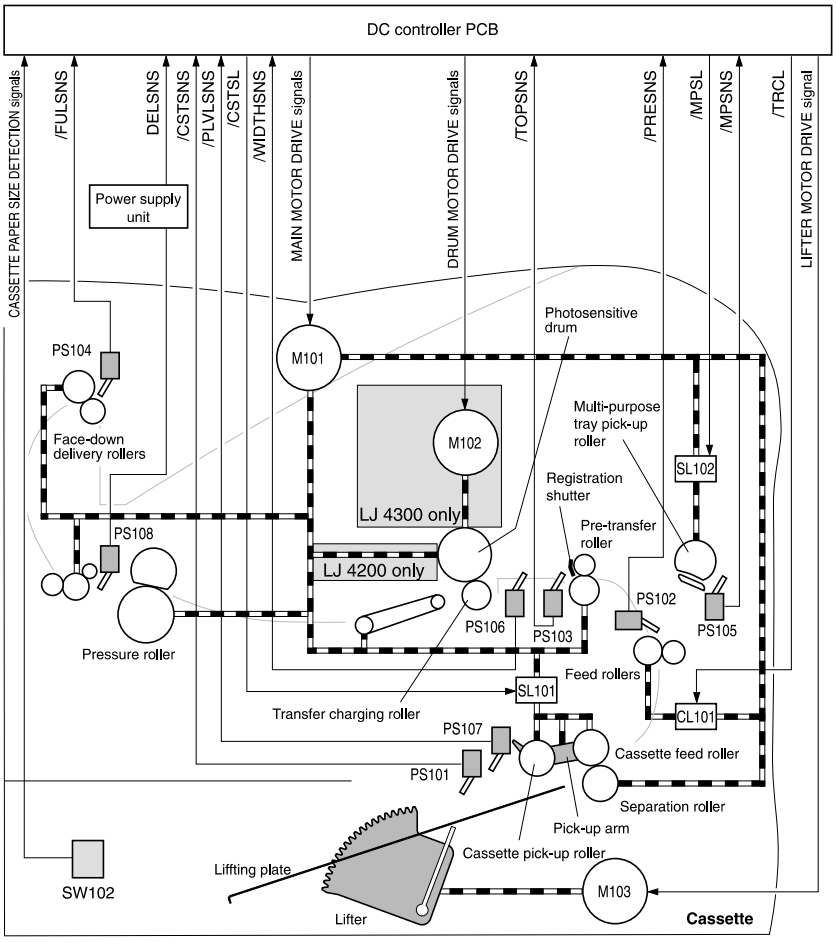

Figure 14. **Printer paper pickup and feed block diagram**

Download Free Service Manual at http://printer1.blogspot.com

The paper pickup and feed system is divided into two blocks. The paper pickup/feed block, and the fuser/delivery block.

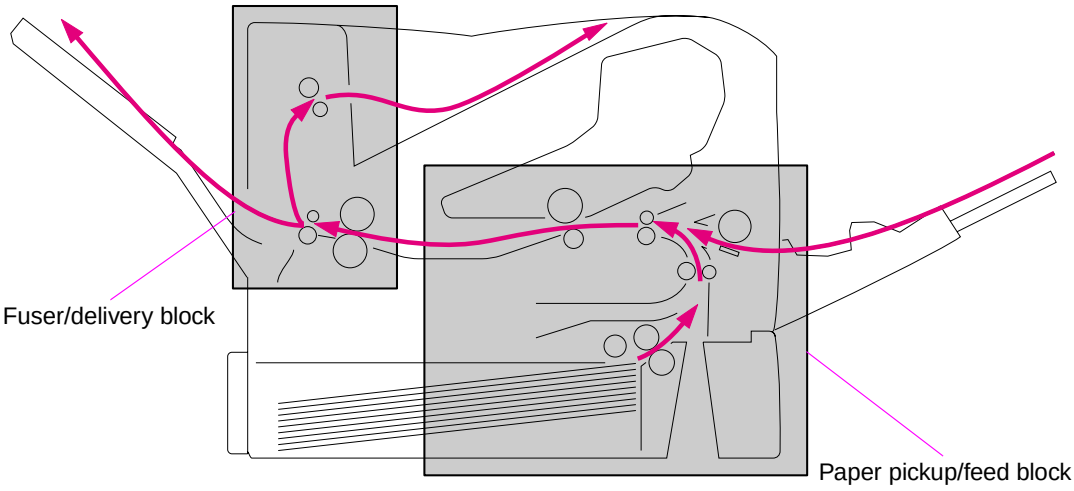

Figure 15. **Paper pickup/feed and fuser/delivery block diagram**

Paper pickup and feed block

The printer functions that take place in the pickup/feed block are cassette media size and presence detection, media entering the paper path from tray 1 or tray 2, Lifting of the tray 2 paper plate, multiple feed prevention, and page skew correction. For information about the locations of switches, sensors, and motors in the pickup/feed block, see "Printer switches and sensors" on page 336 and "Printer motors and fans" on page 337.

When the print command is received from the host computer by the DC controller PCA it turns the main motor (M101) power on. This motor will drive the tray 2 pickup, feed, and separation rollers to rotate. For the HP LaserJet 4300, the print cartridge motor power also is turned on. The laser/scanner motor power is turned on.

The DC controller PCA then activates the feed clutch (CL101) to rotate the feed roller. The tray 2 pickup solenoid is activated (SL101) and the pickup arm descends. The pickup roller touches the media and a sheet is fed into the printer. The separation roller prevents multi-sheets of media from being fed all at one time.

As the pre-feed sensor (PS102) detects the media, the DC controller PCA turns off the clutch which stops the media. When the DC controller PCA detects that the laser/scanner is ready it activates the feed clutch again. The feed roller moves the media further into the printer. Page skew is corrected by the registration shutter and the media is transported to the fuser/delivery block (feed belt, fuser, and delivery output bin).

For information about the timing of these operations, see "HP LaserJet 4200 general timing diagram" on page 357 and "HP LaserJet 4300 general timing diagram" on page 358.

Download Free Service Manual at http://printer1.blogspot.com

Printing from tray 1

The presence of paper in tray 1 is detected by the tray 1 paper sensor (PS105).

When the DC controller PCA receives the print command, the printer starts the initial rotation phase. (This consists of main motor warm-up, scanner motor warm-up, high-voltage control sequence and fuser warm-up.) When the initial rotation phase ends, the tray 1 pickup solenoid (SL102) is activated.

The cam rotates, the paper tray lifter rises, and the media comes in contact with the tray 1 pickup roller. At the same time, the tray 1 pickup roller rotates twice and a sheet of media in tray 1 is picked up. The separation pad prevents unnecessary sheets from feeding with the first sheet.

The sheet then reaches the registration assembly, where its skew is corrected. Then it goes through transfer, separation, and fusing stages; passes through the delivery unit; and is delivered to the output bin.

Note If paper is removed from tray 1 just before it is picked, the tray 1 pickup roller might continue to rotate up to six times and a jam will be detected.

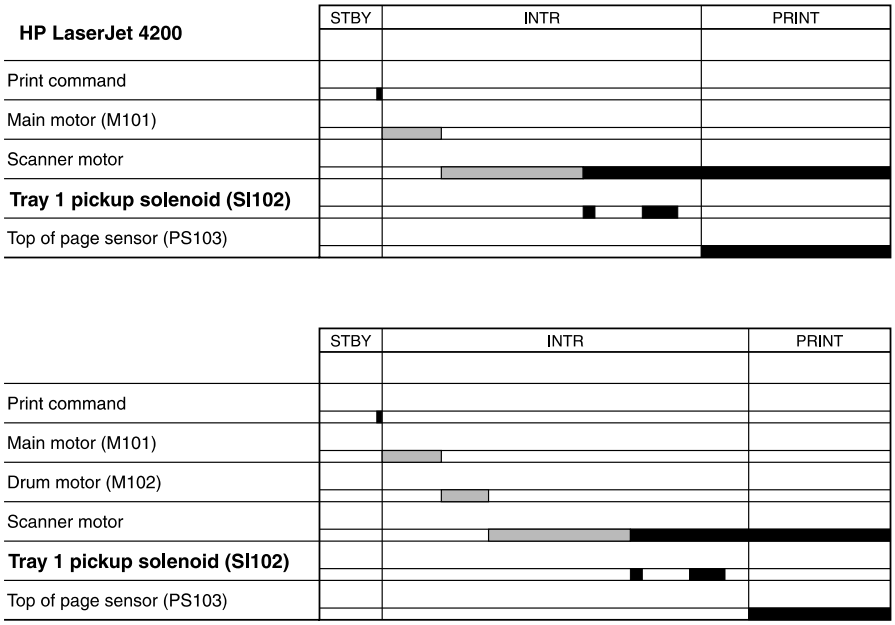

Figure 16. **Tray 1 timing diagrams**

Download Free Service Manual at http://printer1.blogspot.com

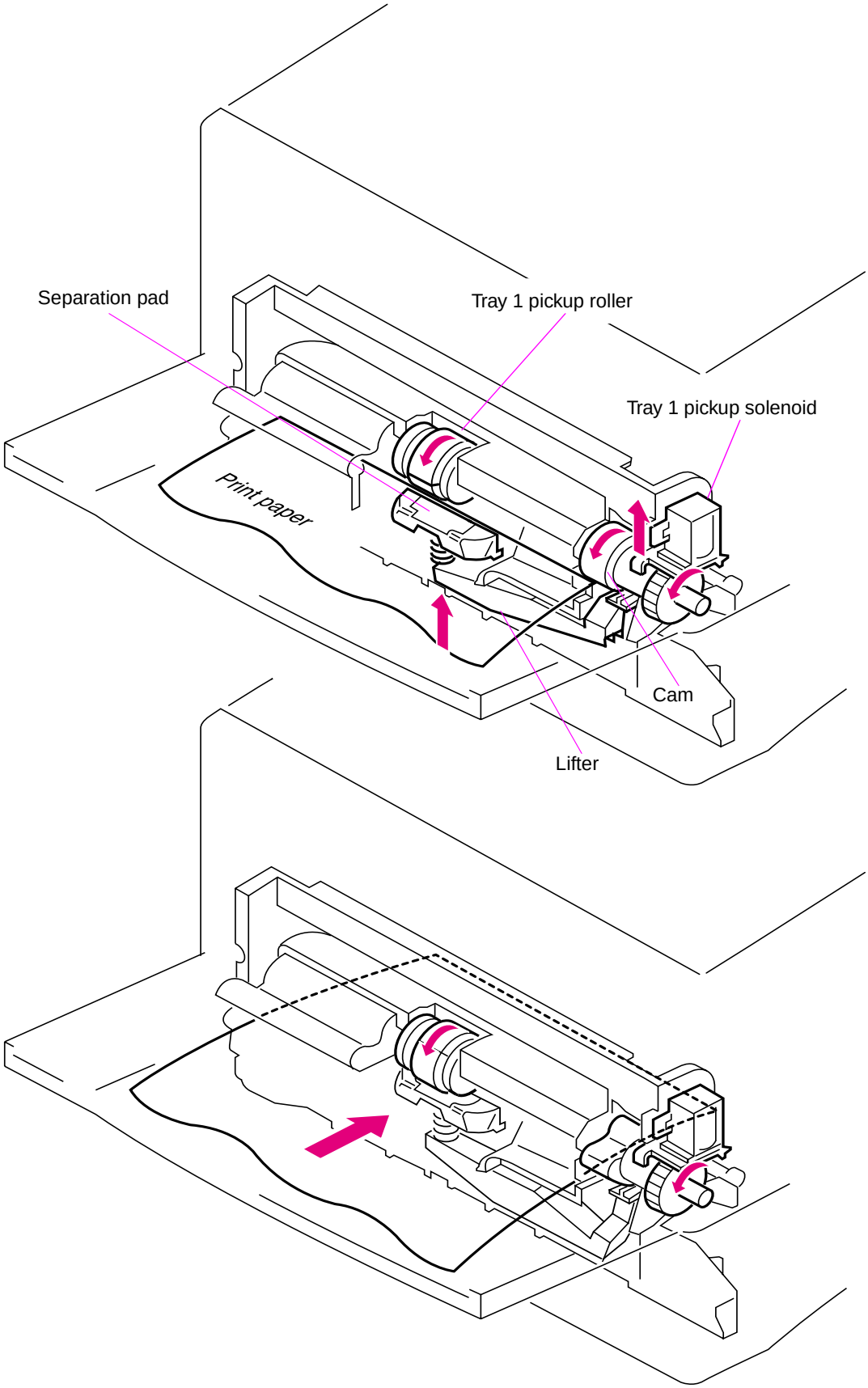

Figure 17. **Tray 1 pickup**

Download Free Service Manual at http://printer1.blogspot.com

Printing from tray 2

When the DC controller PCA receives print command, the main motor (M101) and scanner motor start rotation. When the main motor reaches its prescribed speed, the feed roller clutch (CL101) and tray 2 pickup solenoid (SL101) are activated. (The tray 2 pickup roller, tray 2 feed roller, tray 2 separation roller, and paper feed rollers are driven by the main motor rotation.)

The tray 2 pickup roller, activated by the pickup solenoid, rotates once and picks up the media in the tray. The unnecessary sheets are removed by the separation roller and the media is fed to the pre-feed sensor (PS102).

The sheet then reaches the registration assembly, where its skew is corrected. Then it goes through transfer, separation, and fusing stages; passes through the delivery unit; and is delivered to the output bin.

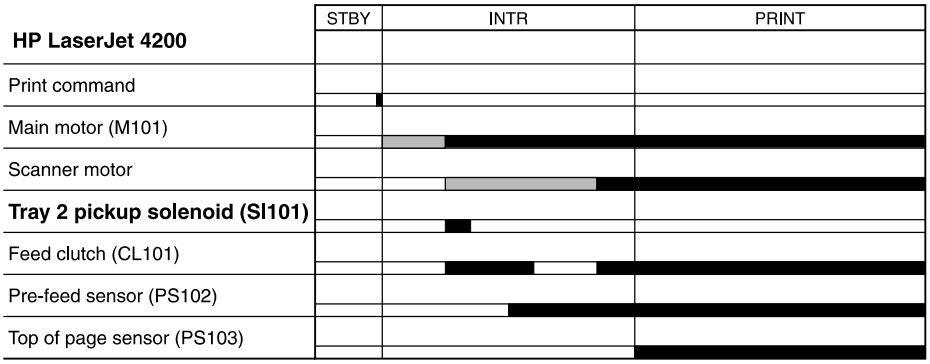

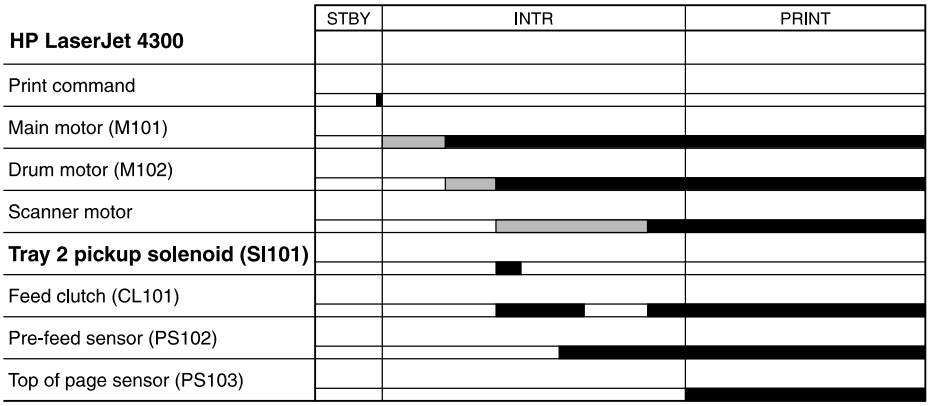

Figure 18. **Tray 2 timing diagrams**

Download Free Service Manual at http://printer1.blogspot.com

Tray 2, 500-, 1,500-sheet feeder media size detection

Media size in the cassette are detected by three switches. The switches are active after the cassette is placed in the tray 2 feeder. (this also applies to the optional 500- and 1,500-sheet feeder). The DC controller PCA microprocessor detects the size and presence of the media by the combinations of the switches.

Table 32. Tray 2 and 500-sheet feeder media size switch settings

Paper size	Media size switch setting		
	Upper	Center	Lower
No cassette installed	Off	Off	Off
A4	Off	Off	On
LTR	Off	On	Off
B5	Off	On	On
A5	On	Off	Off
EXE	On	Off	On
LGL	On	On	Off
UNV	On	On	On

Table 33. 1,500-sheet feeder media size switch settings

Paper size	Media size switch setting		
	Upper	Center	Lower
No cassette installed	Off	Off	Off
A4	On	Off	On
LTR	Off	On	On
LGL	On	On	Off

The tray 2 cassette can detect the media size using the switches describe above, however the user can define the media size for the tray using the control-panel (see “Paper Handling menu” on page 42). In this case the printer may not correctly detect the media size if the user’s defined size does not match the tray settings.

To prevent a false size detection, the printer measures the time it takes for the media to pass from its leading edge to its trailing edge and determines the media size that was fed from the tray. When the measured size differs from the user’s defined size or from the media size switches, a message will appear on the control-panel display (see “Alphabetical printer messages” on page 258).

Download Free Service Manual at http://printer1.blogspot.com

Lifter-driver operation

The lifter driver keeps the media stack surface at a specific level in order to have a stabilized pickup operation regardless of the size of the media in the tray 2 cassette. The DC controller PCA operates the lifter driver motor (M103) for 50 seconds. The motor stops when the paper stack position sensor (PS107) detects the media. If the paper stack position sensor does not detect any media within 8 seconds after the lifting operation has begun, the DC controller PCA determines there has been a lifter driver motor failure and a message appears on the control-panel display (see “Alphabetical printer messages” on page 258 or “Numerical printer messages” on page 274). The DC controller PCA stops the lifting operation if the paper stack position sensor detects the absence of the tray 2 cassette.

Multiple feed prevention

The printer uses the separation roller in tray 2 to prevent multiple-feeding. Normally, the separation roller rotates in the same direction as the feed roller. The separation roller is equipped with a torque limiter, but because the force of the feed roller exceeds that of the torque limiter, the separation roller is actually driven by the feed roller.

If multiple sheets of media are picked up, however, the low friction force between the sheets weakens the rotational force from the feed roller to the separation roller. Consequently, the torque limiter takes control of the separation roller, and rotates the separation roller in the reverse direction, which removes the extra sheets.

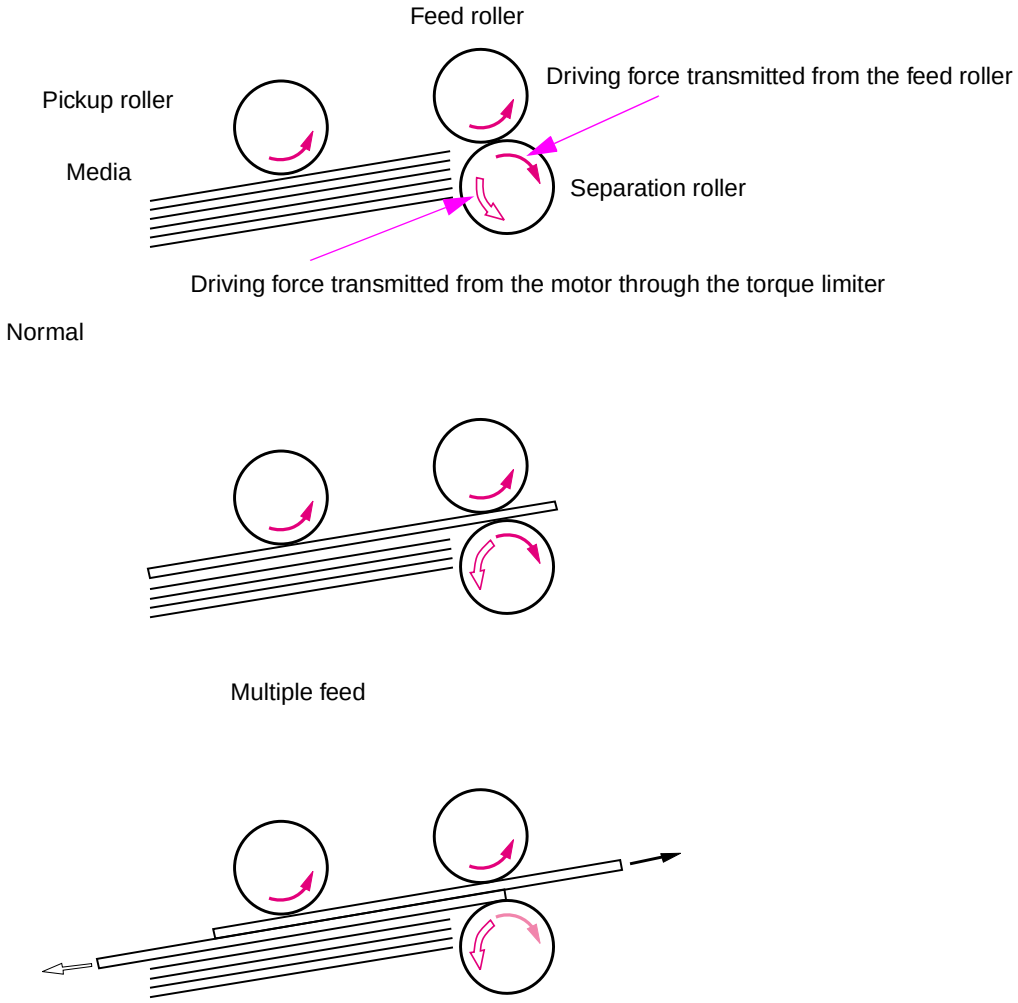

Figure 19. **Multiple feed prevention**

Download Free Service Manual at http://printer1.blogspot.com

Media skew prevention

The printer uses a registration shutter on the registration assembly to prevent media from entering the printer skewed (without decreasing the throughput speed). When media is fed to the registration assembly its leading edge contacts the registration shutter, but does not yet open the shutter. The feed roller continues to rotate and the media begins to sag. The sagging papers leading edge comes in full contact with the shutter (skew is corrected at this point) and raises the registration shutter. With the shutter out of the way, the media can continue into the printer paper path.

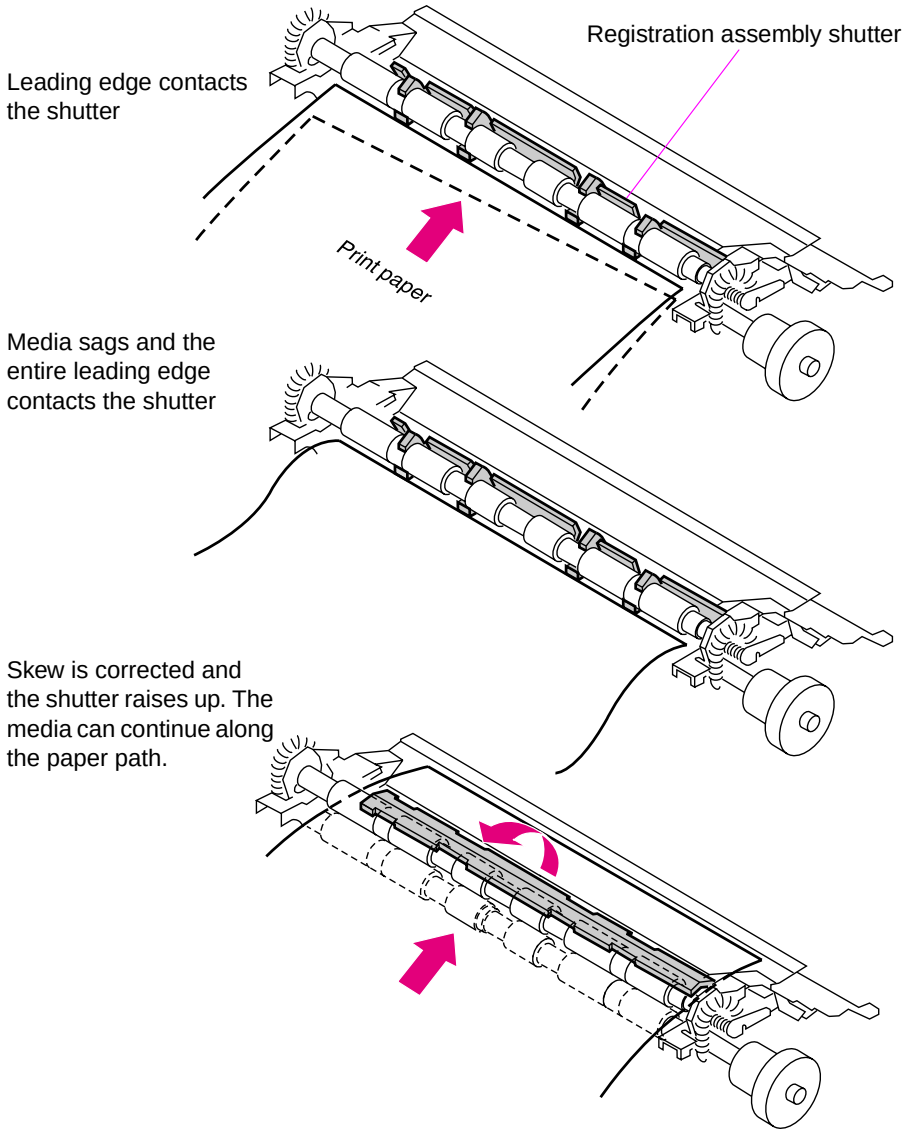

Figure 20. **Correcting skewed media pages**

Download Free Service Manual at http://printer1.blogspot.com

Fixing/delivery block

The paper pickup and feed system is divided into two blocks. The paper pickup tray to the fuser block, and the fuser to output bin block.

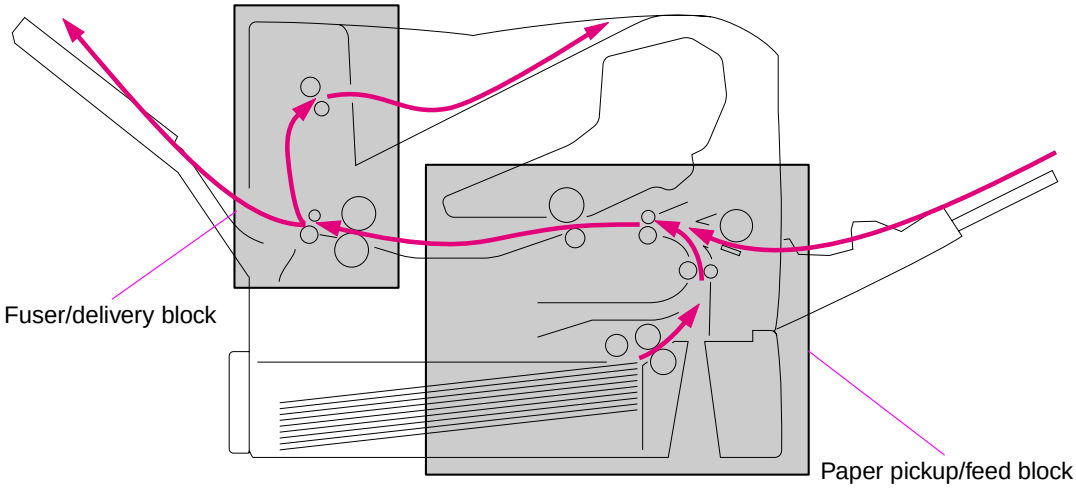

Figure 21. **Paper pickup/feed and fuser/delivery block diagram**

The fuser/delivery block consists of the various rollers, sensors, the fuser, and the output delivery assembly. The rollers transport the media through the fuser/delivery block paper path. The fuser applies heat and pressure to the media to permanently bond the toner image (which was transferred to the media from the photosensitive drum in the print cartridge) to the media. The output delivery assembly sends the printed media either to the rear output bin (if the rear output door is open) or to the top output bin (the default output delivery bin). Sensors along the paper path detect the movement of the media, jams if they occur, and when the top output bin is full.

Download Free Service Manual at http://printer1.blogspot.com

Printer jam detection

The printer uses the following sensors to detect the presence of media and to verify if the media is being fed properly or has jammed. For information about the location of these sensors, see "Printer switches and sensors" on page 336.

- Pre-fed sensor (PS102)
- Top of page sensor (PS103)
- Fuser delivery sensor (PS108)

The microprocessor on the DC controller PCA checks for media jamming by timing the passing of the media as it moves past these sensors. If the media does not pass the sensor in a specific period of time, the transport process is stopped (motors are turned off and the rollers no longer rotate) and a jam message appears on the control-panel display.

Printer pickup delay jam from tray 1

If the top of page sensor (PS103) does not detect the *leading* edge of the media within a specific time after the media is picked up the microprocessor on the DC controller PCA determines there is a pickup jam.

Note The printer attempts to re-pickup the media several times before determining there is a pickup jam. The number of re-pickup tries depends on the pickup source (for example, the re-pickup is tried 4 times if tray 1 is the pickup source).

The transport process is stopped and a `13.XX.YY JAM` message appears on the control-panel display. For more information about jam messages, see "Alphabetical printer messages" on page 258 and "Numerical printer messages" on page 274.

Printer pickup delay jam from tray 2

If the pre-feed sensor (PS102) does not detect the *leading* edge of the media within a specific time after the media is picked up the microprocessor on the DC controller PCA determines there is a pickup jam.

Note The printer attempts to re-pickup the media several times before determining there is a pickup jam. The number of re-pickup tries depends on the pickup source (for example, the re-pickup is tried 4 times if tray 1 is the pickup source).

The transport process is stopped and a `13.XX.YY JAM` message appears on the control-panel display. For more information about jam messages, see "Alphabetical printer messages" on page 258 and "Numerical printer messages" on page 274.

Printer pickup stationary jam

If the top of page sensor (PS103) does not detect the *trailing* edge of the media within a specific time after the media is picked up the microprocessor on the DC controller PCA determines there is a pickup jam.

The transport process is stopped and a `13.XX.YY JAM` message appears on the control-panel display. For more information about jam messages, see "Alphabetical printer messages" on page 258 and "Numerical printer messages" on page 274.

Download Free Service Manual at http://printer1.blogspot.com

Printer delivery wrap jam when feeding regular media

Regular size media is defined as A4, letter, legal, B5, executive or A5.

If the fuser delivery sensor (PS108) does not detect the *trailing* edge of the media after a specified fusing time the microprocessor on the DC controller PCA determines there is a fuser wrap jam.

The transport process is stopped and a `13.XX.YY JAM` message appears on the control-panel display. For more information about jam messages, see "Alphabetical printer messages" on page 258 and "Numerical printer messages" on page 274.

Printer delivery wrap jam when feeding non-regular media

Non-regular media is defined as media that is less than 200mm (7.9 inches) in length.

If the fuser delivery sensor (PS108) does not detect the *trailing* edge of the media within a specified time after a fuser wrapping jam is detected, the microprocessor on the DC controller PCA determines there is a fuser wrap jam.

Or If the fuser delivery sensor (PS108) does not detect the *trailing* edge of the media within a specified time after it has detected the *leading* edge of the media the microprocessor on the DC controller PCA determines there is a fuser wrap jam.

The transport process is stopped and a `13.XX.YY JAM` message appears on the control-panel display. For more information about jam messages, see "Alphabetical printer messages" on page 258 and "Numerical printer messages" on page 274.

Printer delivery delay jam

If the fuser delivery sensor (PS108) does not detect the *trailing* edge of the media within a specific time after detecting the *leading* edge of the media, the microprocessor on the DC controller PCA determines there is a fuser stationary jam.

The transport process is stopped and a `13.XX.YY JAM` message appears on the control-panel display. For more information about jam messages, see "Alphabetical printer messages" on page 258 and "Numerical printer messages" on page 274.

If the fuser delivery sensor (PS108) detects the *trailing* edge (paper out) of the media within a specified time, after it has detected the leading edge of the media the microprocessor on the DC controller PCA determines there is a delivery jam.

However, if the paper length detected by the top of page sensor (PS103) does not match the media size that the printer expects from the pickup source, this jam is ignored. The top of page sensor (PS103) determines the length of the page by measuring the tim it takes between the passing of the leading and trailing edges of the page.

The transport process is stopped and a `13.XX.YY JAM` message appears on the control-panel display. For more information about jam messages, see "Alphabetical printer messages" on page 258 and "Numerical printer messages" on page 274.

Note This jam cannot be detected for pages that are less than 200mm (7.9 inches) in length.

Download Free Service Manual at http://printer1.blogspot.com

Printer door open jam

If the top door is opened (this will activate the top door open switch; SW101) during a print operation, the microprocessor on the DC controller PCA determines there is door open jam.

The transport process is stopped and a `13.XX.YY JAM` message appears on the control-panel display. For more information about jam messages, see “Alphabetical printer messages” on page 258 and “Numerical printer messages” on page 274.

Printer residual media jam

If either the top of the page sensor (PS103) or the fuser delivery sensor (PS108) does not detect the *leading* edge of the media at the start of initial rotation (see table 30 on page 67) the microprocessor on the DC controller PCA determines there is residual media jam.

Download Free Service Manual at http://printer1.blogspot.com

Printing from the 500-sheet feeder

Note The HP LaserJet 4200/4300 series printers support up to two optional 500-sheet feeders.

The paper-feeder driver controls the operation sequences of the 500-sheet feeder. An 8-bit microprocessor in the paper-feeder driver controls the 500-sheet feeder sequences and the communication with the DC controller PCA.

The paper-feeder driver drives the solenoid in response to the pickup command. The paper-feeder driver also returns the status of the paper feeder to the DC controller PCA.

The printer delivers a charge of +24 vdc to the paper feeder, which then generates +3.3 v for the integrated circuits.

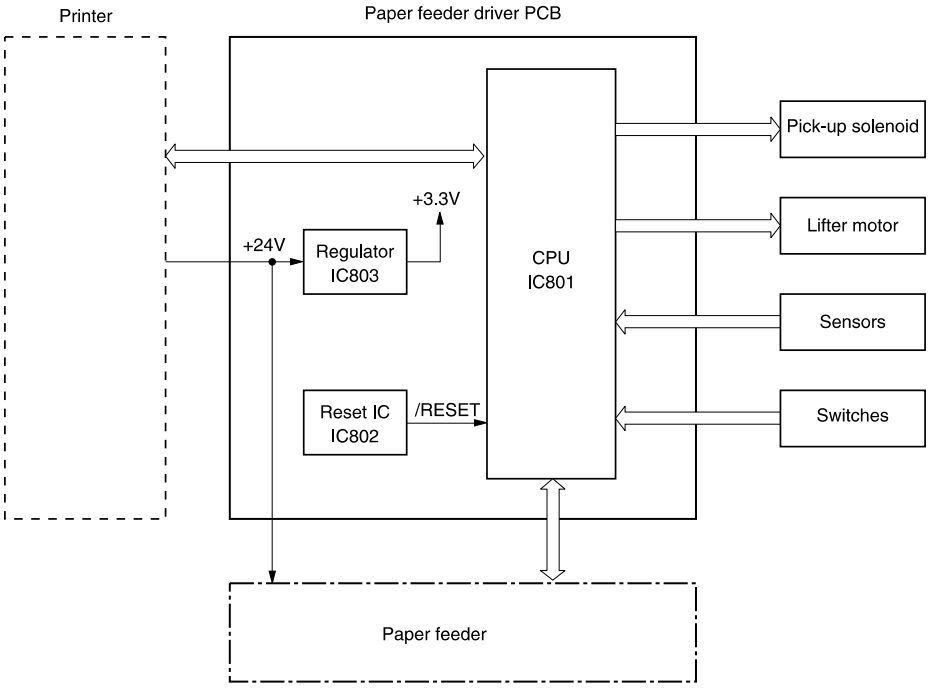

Figure 22. **500-sheet feeder I/O block diagram**

500-sheet feeder pickup and feeding

Three switches on the paper-feeder driver detect the media size and the presence of the 500-sheet tray. The relationship between the switch combinations and the paper sizes is the same as for the printer. See table 32 on page 83.

The main motor (M101) of the printer drives the paper feeder. When the DC controller PCA sends a print command to the paper feeder, the main motor of the printer begins to rotate. When the scanner motor reaches its prescribed speed, the paper-feeder driver receives the pickup command from the DC controller PCA and activates the paper-feeder pickup solenoid. (The main motor drives the pickup roller, feed roller, and separation roller.)

Download Free Service Manual at http://printer1.blogspot.com

The pickup roller, activated by the solenoid, rotates once, picking up the media inside the 500-sheet tray. The separation roller removes any unnecessary sheets and the media travels to the pre-feed sensor (PS102).

The sheet then reaches the registration assembly, where its skew is corrected. Then it goes through transfer, separation, and fusing stages; passes through the delivery unit; and is delivered to the output bin.

Note The 500-sheet feeder detects pickup and feed jams in the same way as the printer. See "Printer jam detection" on page 87.

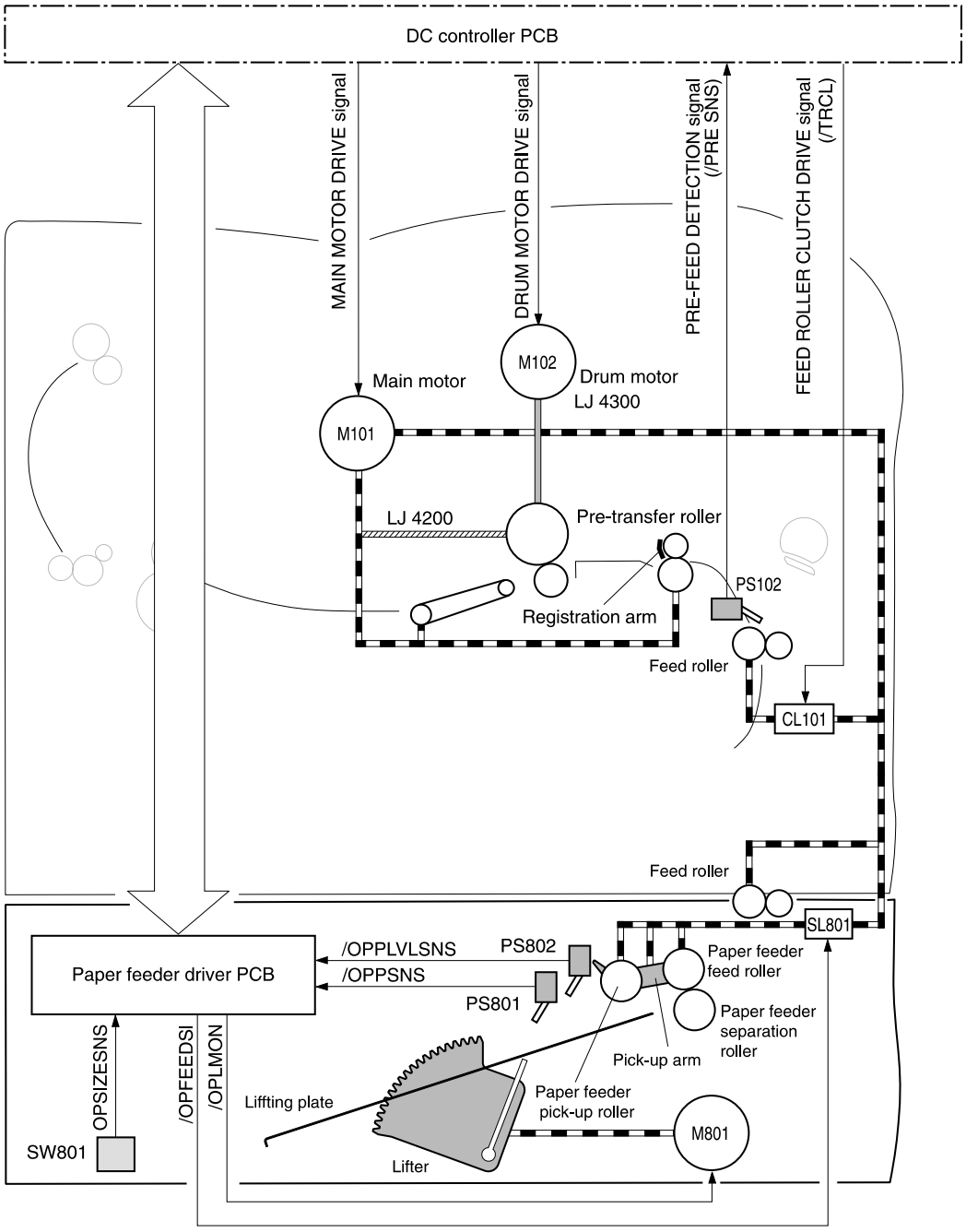

Figure 23. **500-sheet feeder pickup and feed diagram**

Download Free Service Manual at http://printer1.blogspot.com

Printing from the 1,500-sheet feeder

The paper-feeder driver controls the operation sequences of the 1,500-sheet feeder. An 8-bit microprocessor in the paper-feeder driver controls the 1,500-sheet feeder sequences and the communication with the DC controller PCA.

The paper-feeder driver drives the solenoid in response to the pickup command. The paper-feeder driver also returns the status of the paper feeder to the DC controller PCA.

The printer delivers a charge of +24 vdc to the 1,500-sheet feeder, which then generates +3.3 v for the integrated circuits.

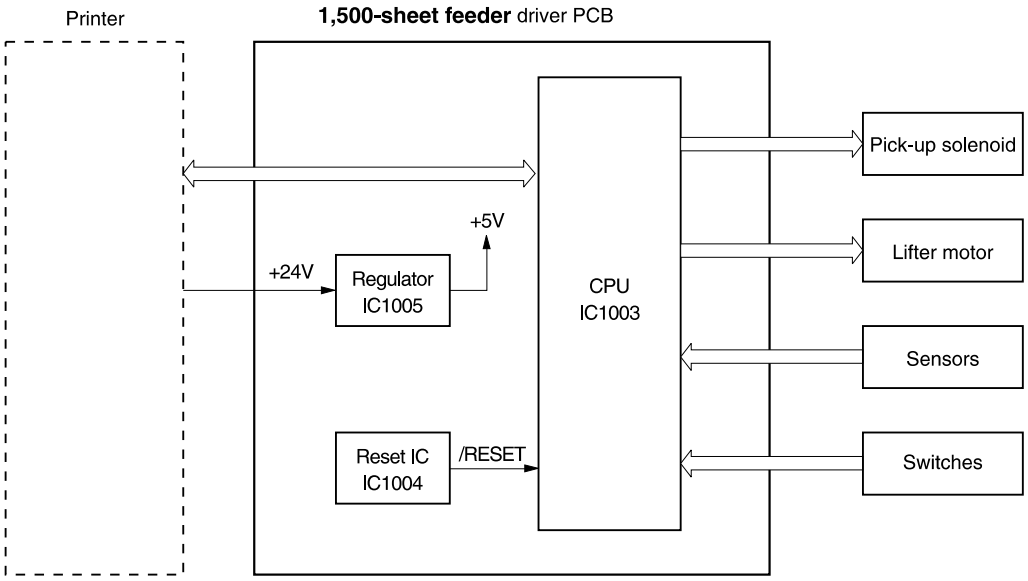

Figure 24. **1,500-sheet feeder I/O block diagram**

1,500-sheet feeder pickup and feeding

Three switches on the paper-feeder driver detect the media size and the presence of the 1,500-sheet tray. The relationship between the switch combinations and the paper sizes is the same as for the printer. See table 32 on page 83

The main motor (M101) of the printer drives the paper feeder. When the DC controller PCA sends a print command the main motor of the printer begins to rotate. When the scanner motor reaches its prescribed speed, the paper-feeder driver receives the pickup command from the DC controller PCA and activates the paper pickup solenoid. (The main motor drives the pickup roller, feed roller, and separation roller.)

The pickup roller, activated by the solenoid, rotates once, picking up the media inside the 1,500-sheet tray. The separation roller removes any unnecessary sheets and the media travels to the pre-feed sensor (PS102).

The sheet then reaches the registration assembly, where its skew is corrected. Then it goes through transfer, separation, and fusing stages; passes through the delivery unit; and is delivered to the output bin.

Note The 1,500-sheet feeder detects pickup and feed jams in the same way as the printer. See“Printer jam detection” on page 87.

Download Free Service Manual at http://printer1.blogspot.com

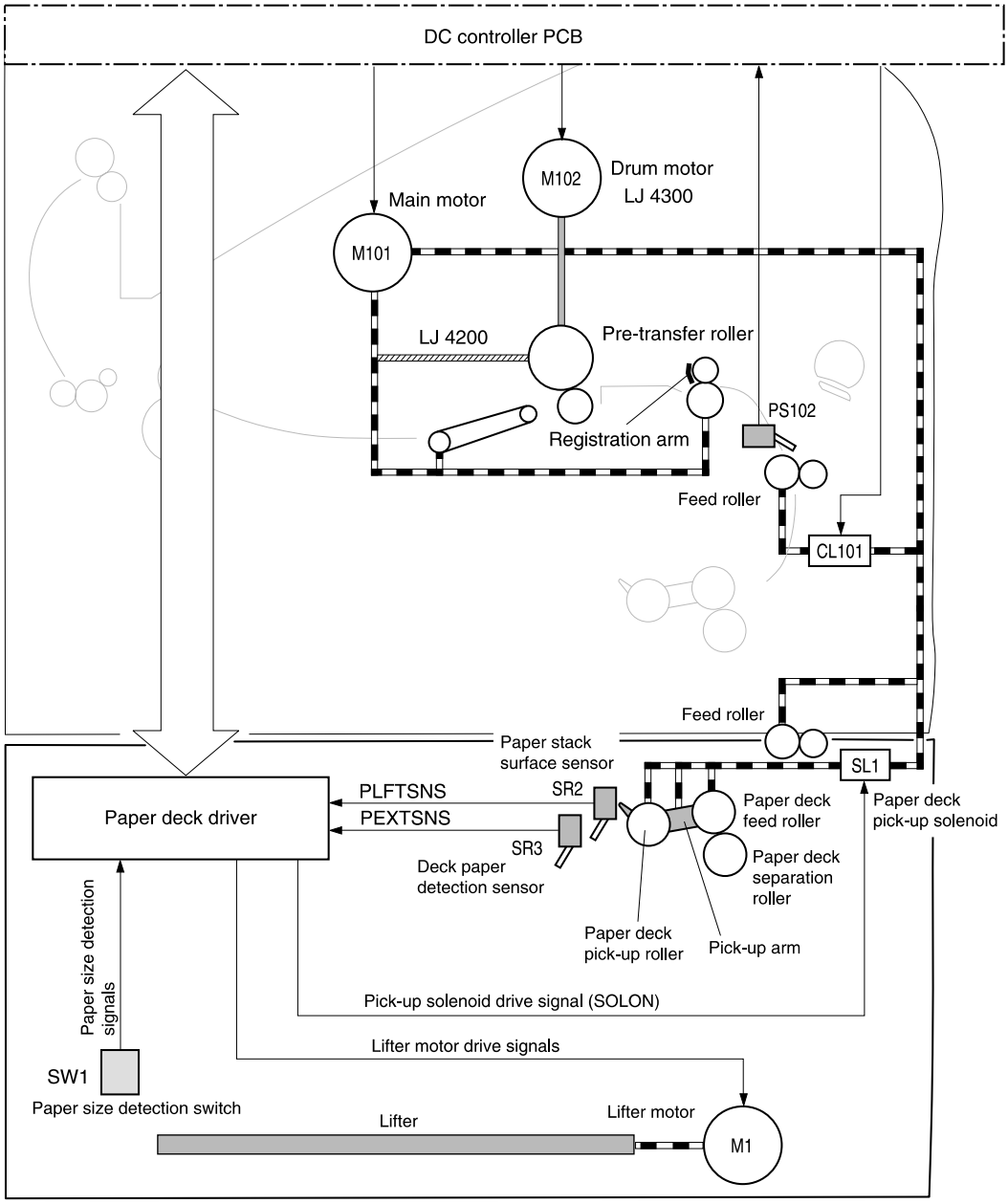

PEXTSNS: Deck paper detection signal

PLFTSNS: Paper stack surface detection signal

Figure 25. **1,500-sheet feeder pickup and feed diagram**

Download Free Service Manual at http://printer1.blogspot.com

1,500-sheet feeder lifting mechanism

The lifting mechanism maintains the media stack surface at a specific position inside the 1,500-sheet feeder. This allows the feeder to perform a stabilized pickup operation regardless of the size of the media loaded in the feeder. The lift plate inside of the feeder is lifted by two wire cables. A motor (M1) winds these wires up using pulleys in the feeder. When the front door of the feeder is opened, the pulley gears and the motor gear are disengaged and the lift plate lowers under its own weight. The lifting mechanism is active (the plate is in the raised position) when it is signaled by the DC controller PCA, the front door is closed, or during the print operation. The 1,500-sheet feeder control PCA driver stops the motor (M1) when the 1,500-sheet feeder paper stack position sensor (SR2) detects media.

If the 1,500-sheet feeder paper stack position sensor (SR2) does not detect media within about 30 seconds after the start of the lift operation, the paper-deck driver PCA detects a lifter motor failure and sends a signal to the DC controller PCA. An error message appears on the control-panel display.

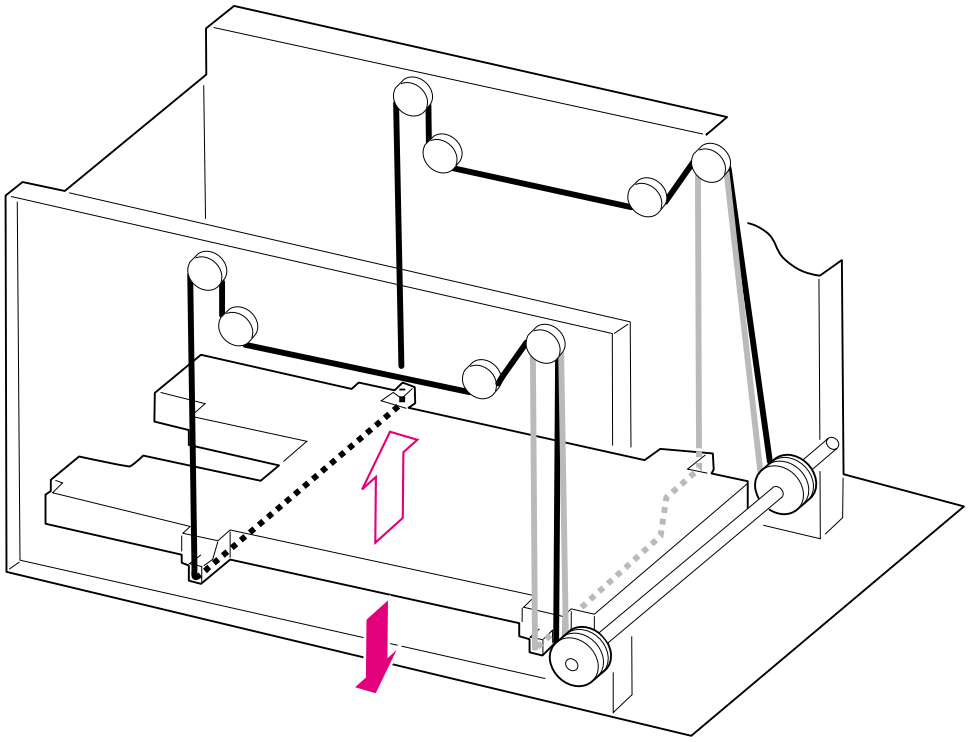

Figure 26. **1,500-sheet feeder lifting mechanism**

Download Free Service Manual at http://printer1.blogspot.com

Envelope feeder

The envelope-feeder driver controls the operation sequences of the envelope feeder. An 8-bit microprocessor in the envelope feeder driver controls the envelope-feeder sequence and the communication with the DC controller PCA.

The DC controller PCA sends the pickup command to the envelope-feeder driver with the necessary timing. The envelope-feeder driver activates the solenoid in response to the command.

The printer delivers a charge of +24 vdc to the envelope feeder, which then generates +5 v for the integrated circuits.

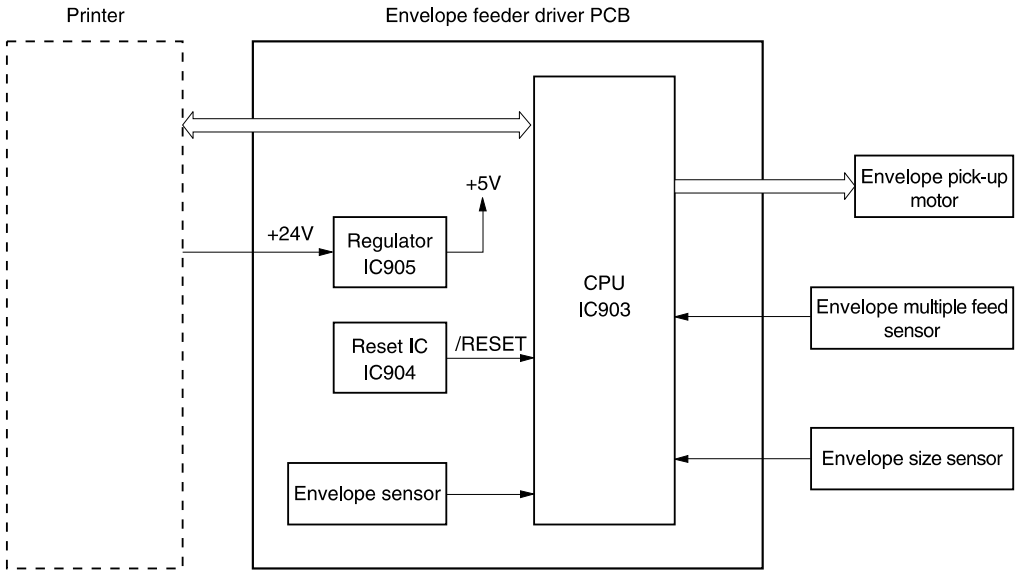

Figure 27. **Envelope feeder I/O block diagram**

Download Free Service Manual at http://printer1.blogspot.com

Envelope feeder pickup and feeding

In the envelope feeder, the envelope sensor (PS901) detects the presence of envelopes and the envelope-size sensor (PS903) detects the width of the envelope. The envelope pickup motor (M901) drives all of the rollers in the envelope feeder.

When the DC controller PCA sends a print command the main motor (M101) in the printer begins to rotate. After the main motor initial rotation phase is completed, the scanner motor begins to rotate. As the scanner motor rotates, the envelope pick-up motor (M901) begins to rotate to drive the pickup roller, feed roller, and separation roller, and an envelope is picked up.

The separation roller removes any unnecessary envelopes and the envelope travels to the printer. The registration assembly corrects any skew. The envelope travels through the printer paper path and is delivered to the output bin.

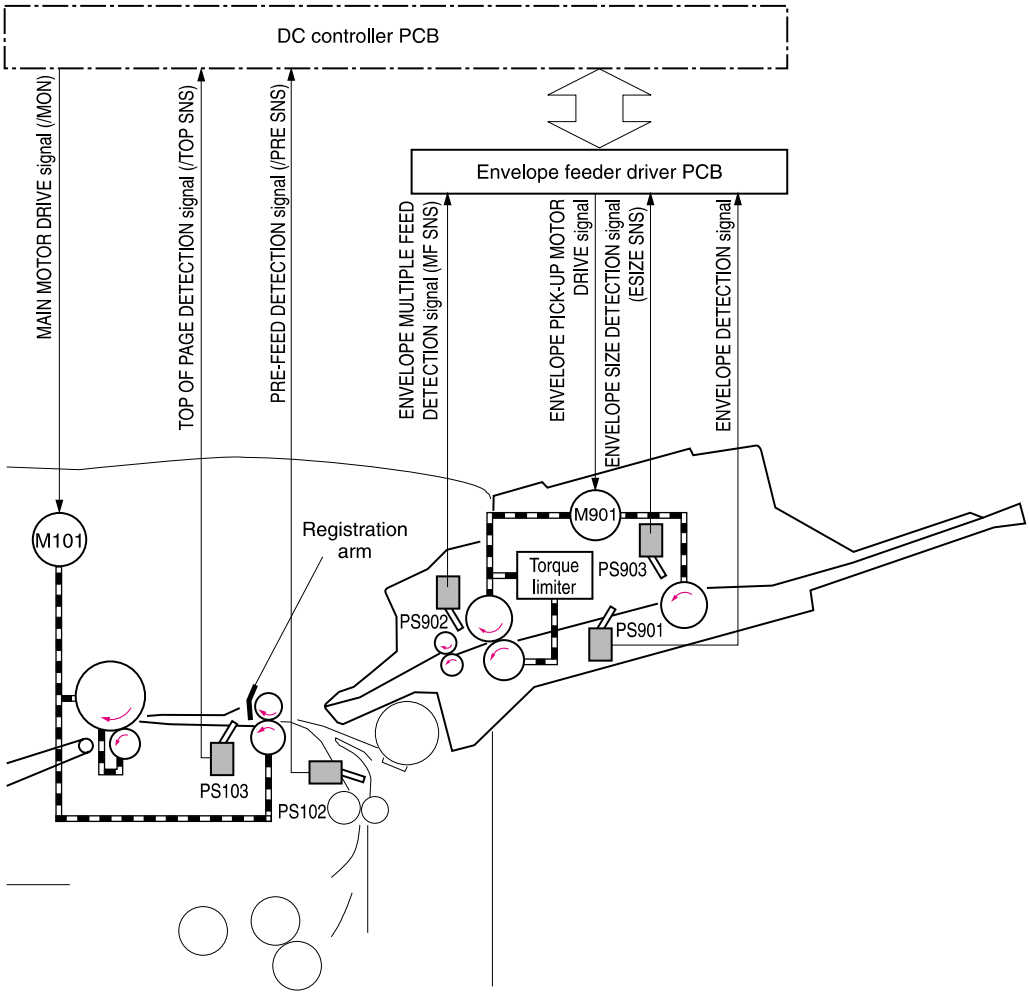

Figure 28. **Envelope feeder pickup and feed diagram**

Download Free Service Manual at http://printer1.blogspot.com

Envelope feeder jam detection

The envelope feeder uses the envelope multiple feed sensor (PS902) along with sensors in the printer to detect the presence of media and to determine whether the media is feeding properly or is jamming.

If a jam occurs in the envelope feeder, the error message `13.XX.YY` appears on the control-panel display. For more information see “Numerical printer messages” on page 274.

Envelope feeder pickup delay jam

If the pickup sensor (PS103) does not detect the *leading* edge of the envelope within a specific time after the envelope is picked up, it attempts to pick up the media several times before determining that a pickup jam has occurred.

If the pre-fed sensor inside of the printer (PS102) does not detect the *leading* edge of the envelope within a specific amount of time after the re-pick operation stops, the microprocessor on the DC controller PCA determines that a jam has occurred.

The transport process stops and a `13.XX.YY` message appears on the control-panel display. For more information about jam messages, see “Numerical printer messages” on page 274.

Envelope feeder pickup stationary jam

If the envelope multiple feed sensor (PS902) detects multiple fed envelopes after the pickup operation begins The transport process stops and a `13.XX.YY` message appears on the control-panel display. For more information about jam messages, see “Numerical printer messages” on page 274.

Download Free Service Manual at http://printer1.blogspot.com

Duplexer

The duplexer driver controls the operation of the duplexer. An 8-bit microprocessor in the duplexer driver controls the duplexer sequence and the communication with the DC controller PCA.

The duplexer driver drives the solenoid, motors, and fan according to commands that the DC controller PCA sends to the duplexer. The duplexer also communicates its status to the DC controller PCA.

The printer delivers a charge of +24 vdc to the duplexer, which then generates +5 v for the integrated circuits.

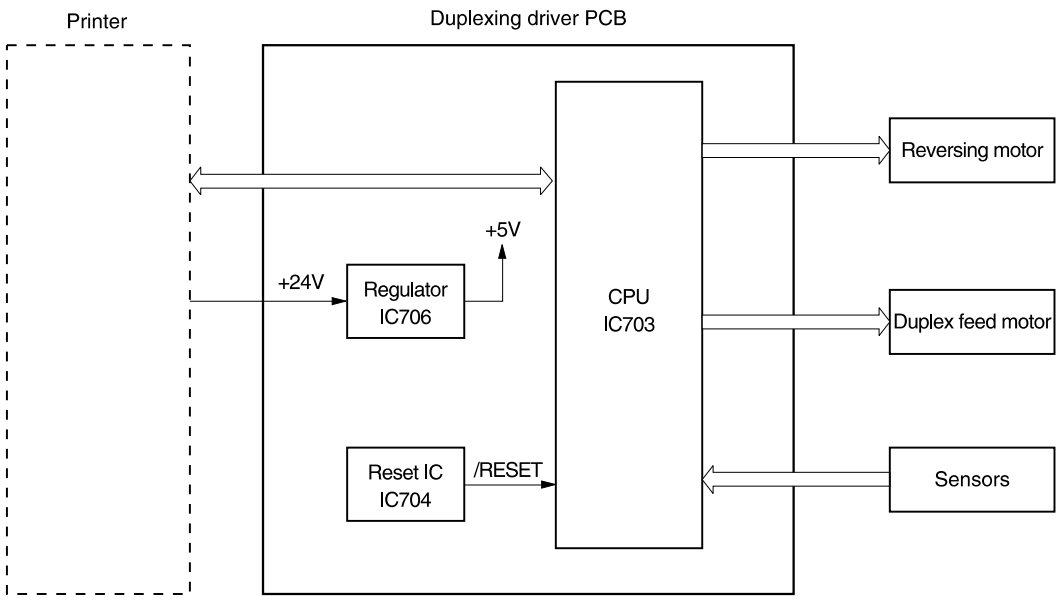

Figure 29. **Duplexer I/O block diagram**

Download Free Service Manual at http://printer1.blogspot.com

Reversing and duplexer pickup

The duplexer has two stepping motors: the reversing motor (M701) and the duplex feed motor (M702). The duplexer driver controls forward and reverse rotations of the motor.

The face-up output tray diverter, which is controlled by the duplexer solenoid, feeds print media to the duplexer.

Note The duplexer cannot be used if the face-up tray is open,.

When the trailing edge of the media passes the reverse sensor (PS703), the reversing motor changes direction. The oblique roller and feed roller then move the media so that its edge makes contact with the left panel to correct skew.

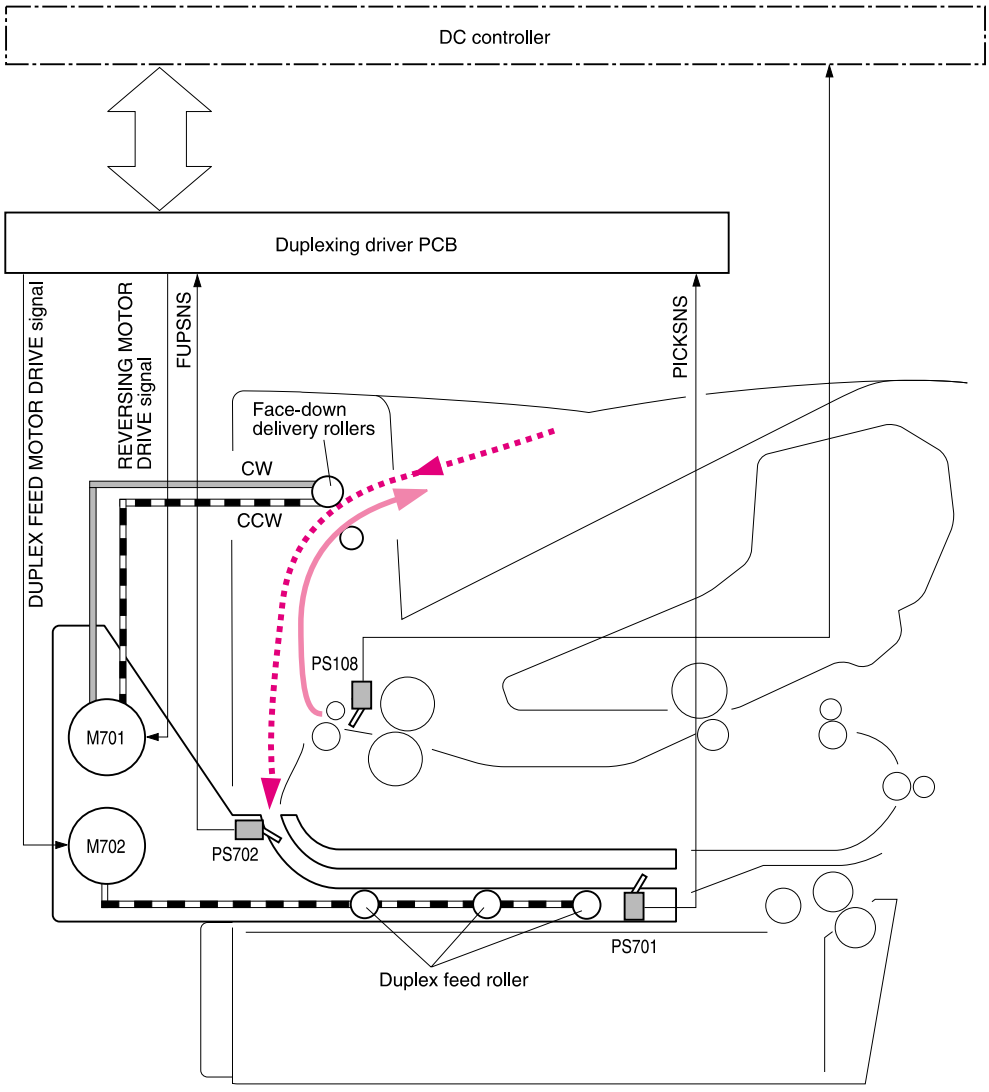

PS108 : Fixing delivery sensor (printer)
PS701 : Duplexing unit pick-up sensor
PS702 : Face-up sensor
M701 : Reversing motor
M702 : Duplex feed motor

PICKSNS : DUPLEXING UNIT PICK-UP DETECTON signal
FUSNS : FACE-UP DETECTION signal

Figure 30. **Duplexer pickup and reversing diagram**

Download Free Service Manual at http://printer1.blogspot.com

Duplexer jam detection

The following paper sensors detect whether or not the print media is present and is feeding normally.

- Tray 2 paper sensor (PS101)
- Pre-feed sensor (PS102)
- Top-of-page sensor (PS103)
- Face-down tray paper-full sensor (PS104)
- Tray 1 (multipurpose tray) paper sensor (PS105)
- Paper width sensor (PS106)
- Fuser delivery sensor 1 (PS108)

The microprocessor on the DC controller PCA detects a jam by using the sensor to check for media presence at a specific timing that is stored in the memory.

If the DC controller PCA detects that a jam has occurred, it stops print operation and an error message appears on the control-panel display. See “Alphabetical printer messages” on page 258 and “Numerical printer messages” on page 274.

Download Free Service Manual at http://printer1.blogspot.com

Stacker and stapler/stacker

The stacker delivers media from the printer to the stacker delivery bin. The stapler/stacker staples the media together, and then delivers it to the stapler/stacker delivery bin. The DC controller PCA controls the stacker and stapler/stacker. When the stacker or stapler/stacker feeds, the DC controller PCA sends page information (for example, the paper size or whether the page is the first or last page of the job) to the stacker or stapler/stacker.

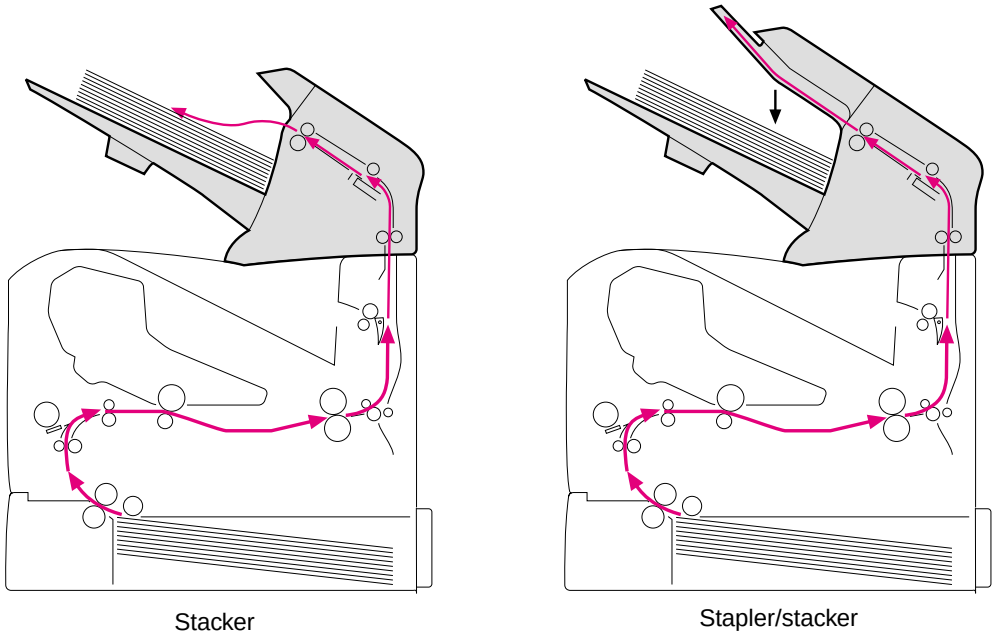

Figure 31. **Stacker and stapler/stacker paper path**

Download Free Service Manual at http://printer1.blogspot.com

The following diagram illustrates the power-on sequence for the stacker and stapler stacker.

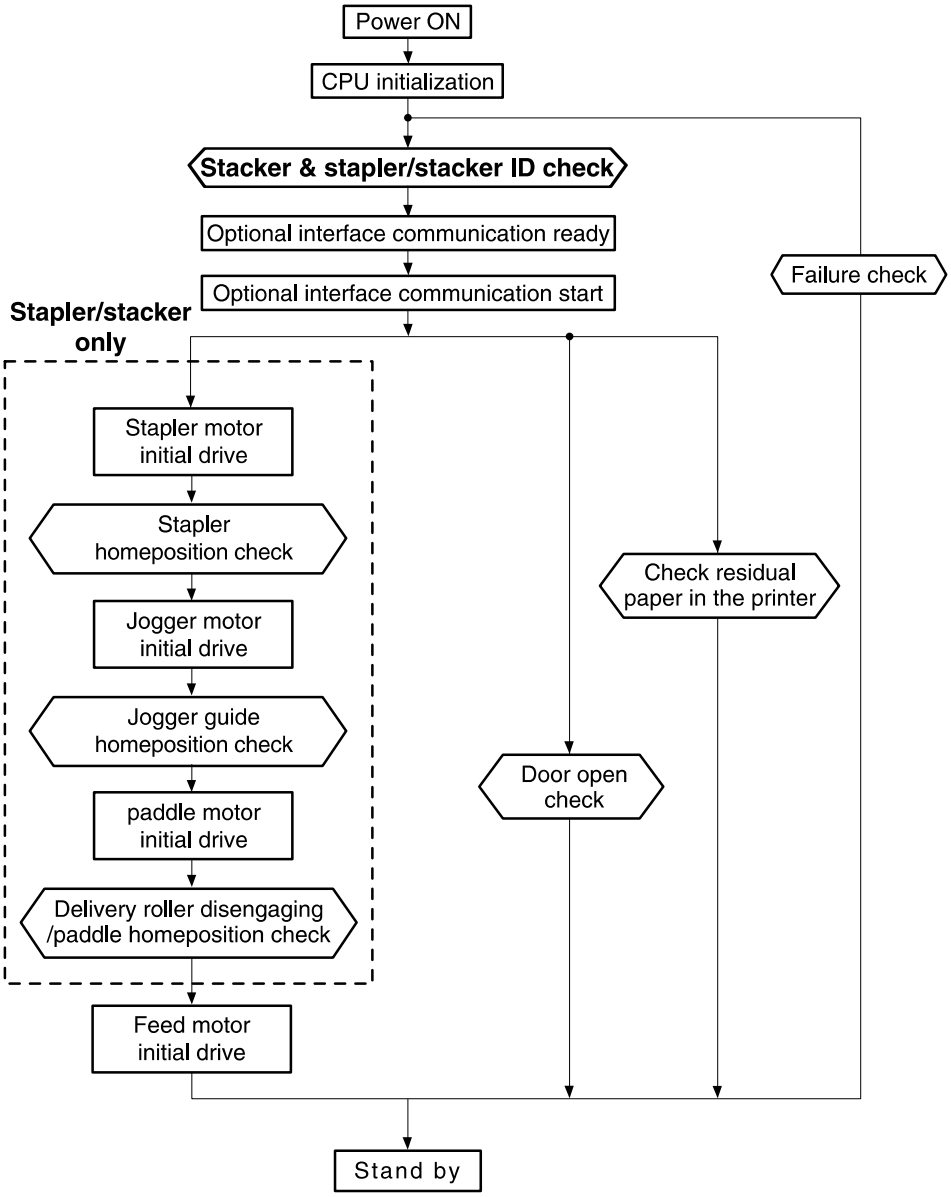

Figure 32. **Power-on sequence for the stacker and stapler/stacker**

Download Free Service Manual at http://printer1.blogspot.com

Stacker

The DC controller PCA controls the stacker and sends signals to the stacker driver PCA. The stacker driver PCA then controls the operation of the stacker components like the stacker motor, solenoid, and sensors. When the printer power is turned on, dc power from the printer's low-voltage supply circuit is supplied to the stacker. The stacker performs the power-on sequence (see figure 32 on page 102) and enters the standby mode. When it receives a signal from the DC controller PCA, the stacker driver PCA activates the motors and solenoids as needed to perform the stack operation.

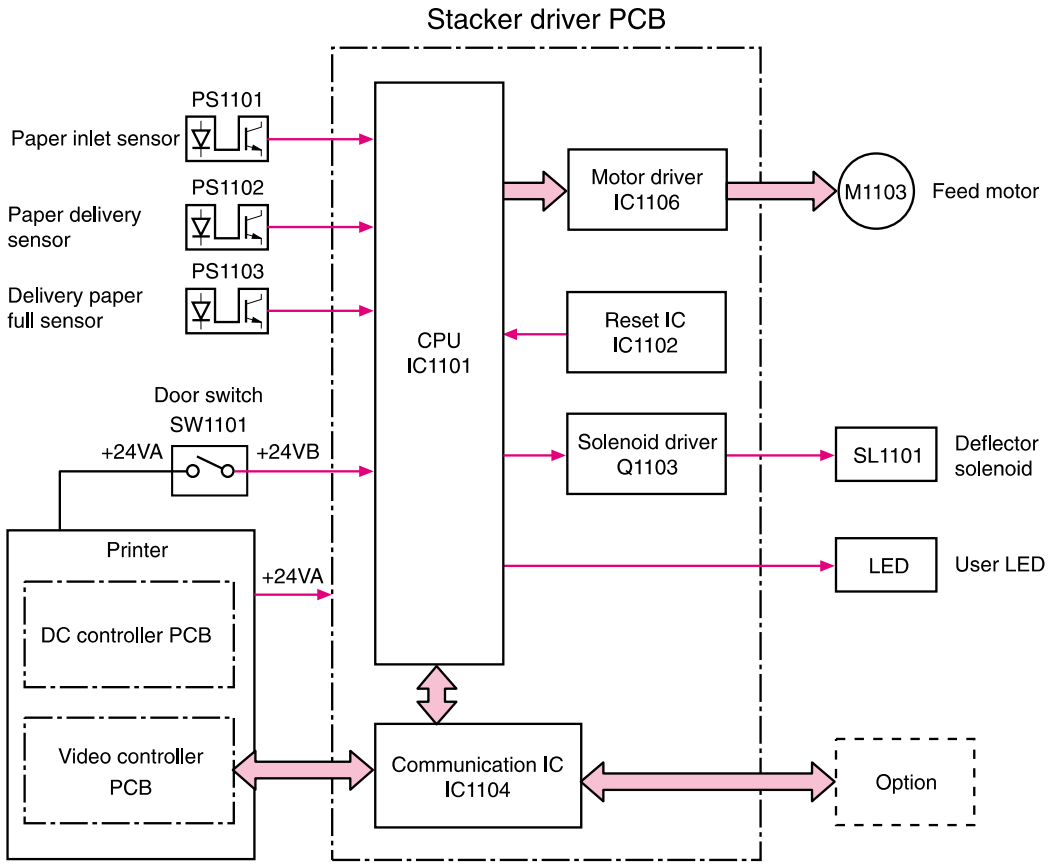

Figure 33. **Stacker driver PCA block diagram**

Download Free Service Manual at http://printer1.blogspot.com

Stacker feed and delivery

The stacker feed and delivery system consists of several feed rollers and guides that the stacker motor and solenoids drive. Sensors along the stacker paper path detect the arrival and passing of media and confirm the position of the jogger guide. The jogger guide helps to align the pages before placing them in the delivery bin.

Table 34. Stacker components

Component		Purpose
Motor	Feed motor (M103)	Rotates the feed and delivery roller
Solenoid	Deflector solenoid (SL1101)	Operates the delivery deflector
Sensor	Paper inlet sensor (PS1101)	Used for jam detection
	Paper delivery sensor (PS1102)	Used for jam detection
	Delivery paper full sensor (PS1106)	Detects that the delivery bin is full
Switch	Door open switch (SW1101)	Detects an open door

After the *leading* edge of the media reaches the fixing delivery sensor (PS108) in the printer, the DC controller PCA sends a signal to the stacker driver PCA. The stacker driver PCA activates the deflector solenoid (SL101) for a specific amount of time to move the delivery deflector into place in the printer which routes the media to the stacker rather than to the printer's top output bin. The stacker driver PCA also activates the stacker motor (at the same speed as the printer's main motor) to rotate the feed and delivery rollers).

The feed roller moves the media into the stacker. If the DC controller PCA sends a following-page signal (which means there is another page in the job), the stacker driver PCA activates the deflector solenoid (SL101) again. The delivery roller moves the media into the delivery bin.

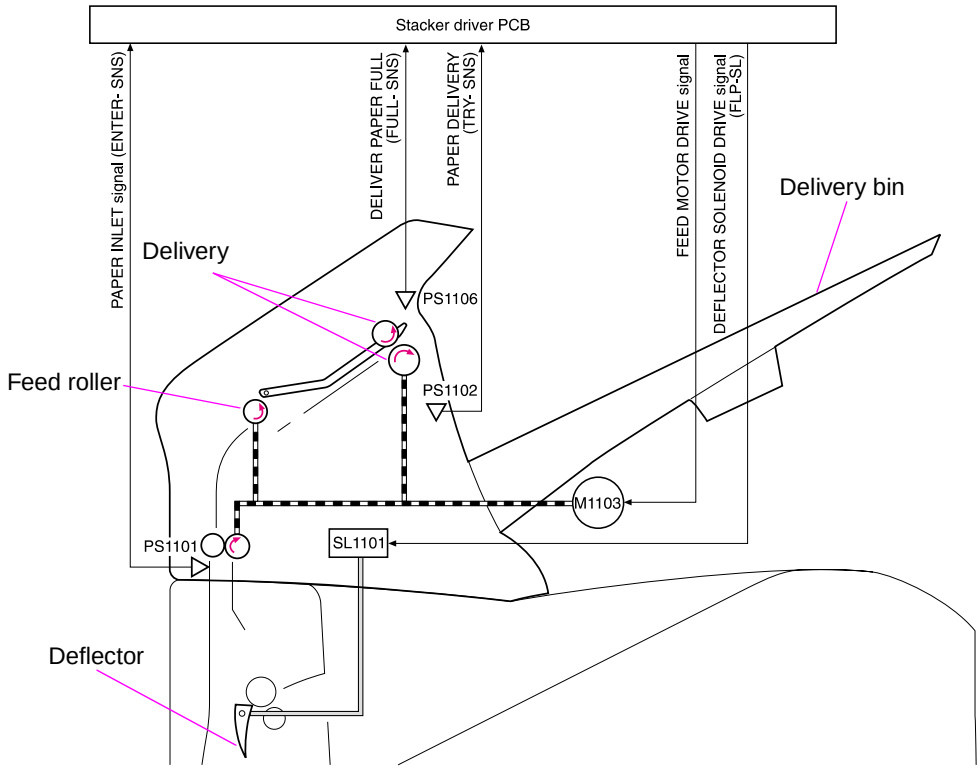

Figure 34. **Stacker feed delivery diagram**

Download Free Service Manual at http://printer1.blogspot.com

Stacker jam detection

The stacker uses the following sensors to detect the presence of media and to verify whether the media is feeding correctly or is jamming. For information about the location of these sensors, see "Stacker and stapler/stacker switches and sensors" on page 345.

- Paper inlet sensor (PS1101)
- Paper delivery sensor (PS102)

Stacker feed jam

If the paper inlet sensor (PS1101) does not detect the *leading* edge of the media within a specific time after the stacker driver has received the paper delivery signal, the DC controller PCA determines that a stacker feed delay jam has occurred.

The transport process stops and a `13.XX.YY JAM` message appears on the control-panel display. For more information about jam messages, see "Alphabetical printer messages" on page 258 and "Numerical printer messages" on page 274.

Stacker feed stationary jam

If the paper inlet sensor (PS1101) does not detect the *trailing* edge of the media within a specific time after the paper inlet sensor (PS1101) detected the *leading* edge of the media, the DC controller PCA determines that a stacker feed delay jam has occurred.

The transport process stops and a `13.XX.YY JAM` message appears on the control-panel display. For more information about jam messages, see "Alphabetical printer messages" on page 258 and "Numerical printer messages" on page 274.

Stacker residual media jam

If the paper inlet sensor (PS1101) or the paper delivery sensor (PS1102) detects media during the initial drive period, the DC controller PCA determines that a stacker feed delay jam has occurred.

The transport process stops and a `13.XX.YY JAM` message appears on the control-panel display. For more information about jam messages, see "Alphabetical printer messages" on page 258 and "Numerical printer messages" on page 274.

Note This jam *only* occurs if the paper delivery sensor (PS1102) detects media at the *start* of the initial drive.

Download Free Service Manual at http://printer1.blogspot.com

Stapler/stacker

The DC controller PCA controls the stapler stacker by sending signals to the stapler/stacker driver PCA. The stapler/stacker PCA controls the stapler/stacker motor, solenoids, sensors, and the stapler unit. When the printer power is turned on dc power from the printer's low-voltage supply circuit is supplied to the stapler/stacker. The stapler/stacker performs the power on sequence (see figure 32 on page 102) and enters the standby mode. When the DC controller PCA sends a signal, the stapler/stacker driver PCA activates the motors and solenoids as needed to perform the staple and stack operation.

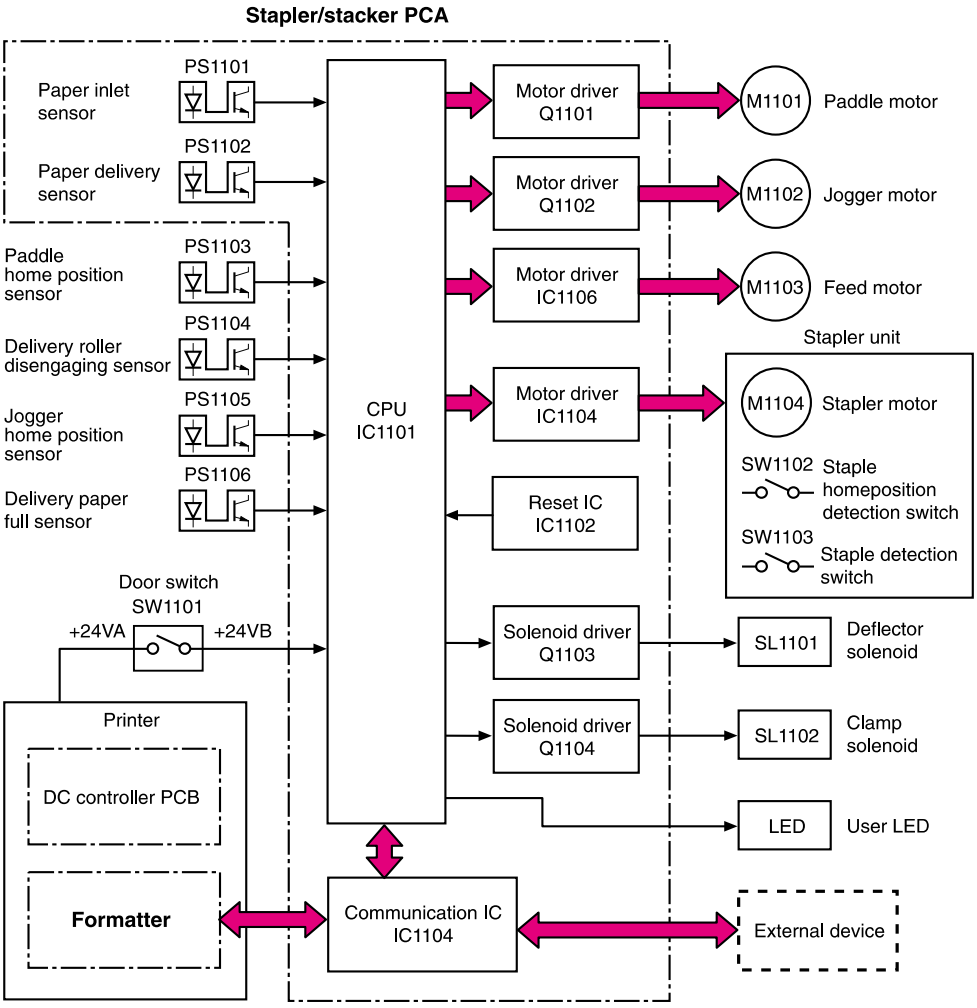

Figure 35. **Stapler/stacker driver PCA block diagram**

Download Free Service Manual at http://printer1.blogspot.com

Stapler/stacker feed and delivery

The stapler/stacker feed and delivery system consists of several feed rollers and guides that are driven by the stapler/stacker motors and solenoids. Sensors along the stapler/stacker paper path detect the arrival and passage of media and confirm the position of the jogger guide. The jogger guide helps to align the pages before stapling and dropping them into the delivery bin.

The stapler/stacker has two modes. The staple mode staples media together and drops them into the delivery bin. The stack mode drops the media directly into the delivery bin without stapling them together.

Table 35. Stapler/stacker components

Component		Purpose
Motor	Paddle motor (M1101)	• Rotates the paddle (clockwise) • Disengages the delivery roller (counterclockwise)
	Jogger motor (M1102)	Shifts the jogger guide. • Widens the jogger guide (clockwise) • Narrows the jogger guide (counterclockwise)
	Feed motor (M103)	Rotates the feed and delivery roller
	Stapler motor (M1104)	Rotates the staple cam
Solenoid	Deflector solenoid (SL1101)	Operates the delivery deflector
	Clamp solenoid (SL1102)	Operates the stapler clamp
Sensor	Paper inlet sensor (PS1101)	Detects jams
	Paper delivery sensor (PS1102)	Detects jams
	Paddle home sensor (PS1103)	Detects if the paddle is in the home position
	Delivery roller disengaging sensor (PS1104)	Detects the disengaging the delivery roller
	Jogger home position sensor (PS1105)	Determines if the jogger guide is in the home position
	Delivery paper full sensor (PS1106)	Detects a full delivery bin
Switch	Door open switch (SW1101)	Detects an open door
	Staple presence switch (SW1102)	Detects the presence of staples in the stapler cartridge
	Staple home position switch (SW1103)	Determines if the stapler cam is in the home position

Download Free Service Manual at http://printer1.blogspot.com

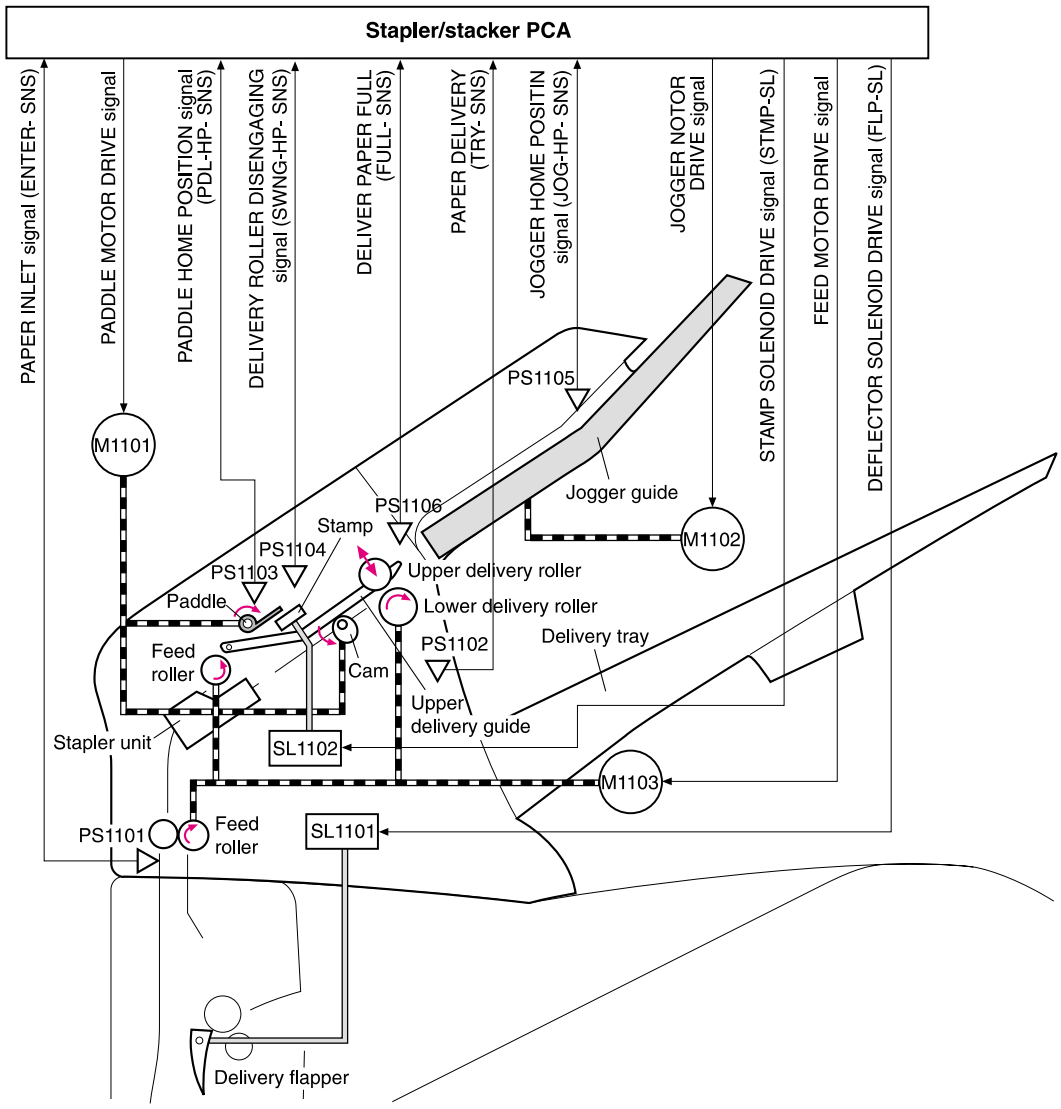

Figure 36. **Stapler/stacker motors, solenoids, and sensors block diagram**

Download Free Service Manual at http://printer1.blogspot.com

Staple mode feed and delivery

In this mode, two to fifteen pages of media are stapled into one set and the stacks are then delivered to the delivery bin.

After the leading edge of the media reaches the fixing delivery sensor (PS108) in the printer the DC controller PCA sends a signal to the stapler/stacker driver PCA. The stapler/stacker driver PCA activates the deflector solenoid (SL101) for a specific amount of time to move the delivery deflector into place, which routes the media to the stapler/stacker rather than the printer's top output bin.

The stapler/stacker driver PCA activates the paddle motor (M1101) to rotate (counterclockwise) the upper and lower delivery rollers to disengage them. It also activates the stacker motor (which rotates at the same speed as the printer's main motor) to rotate the feed and delivery rollers.

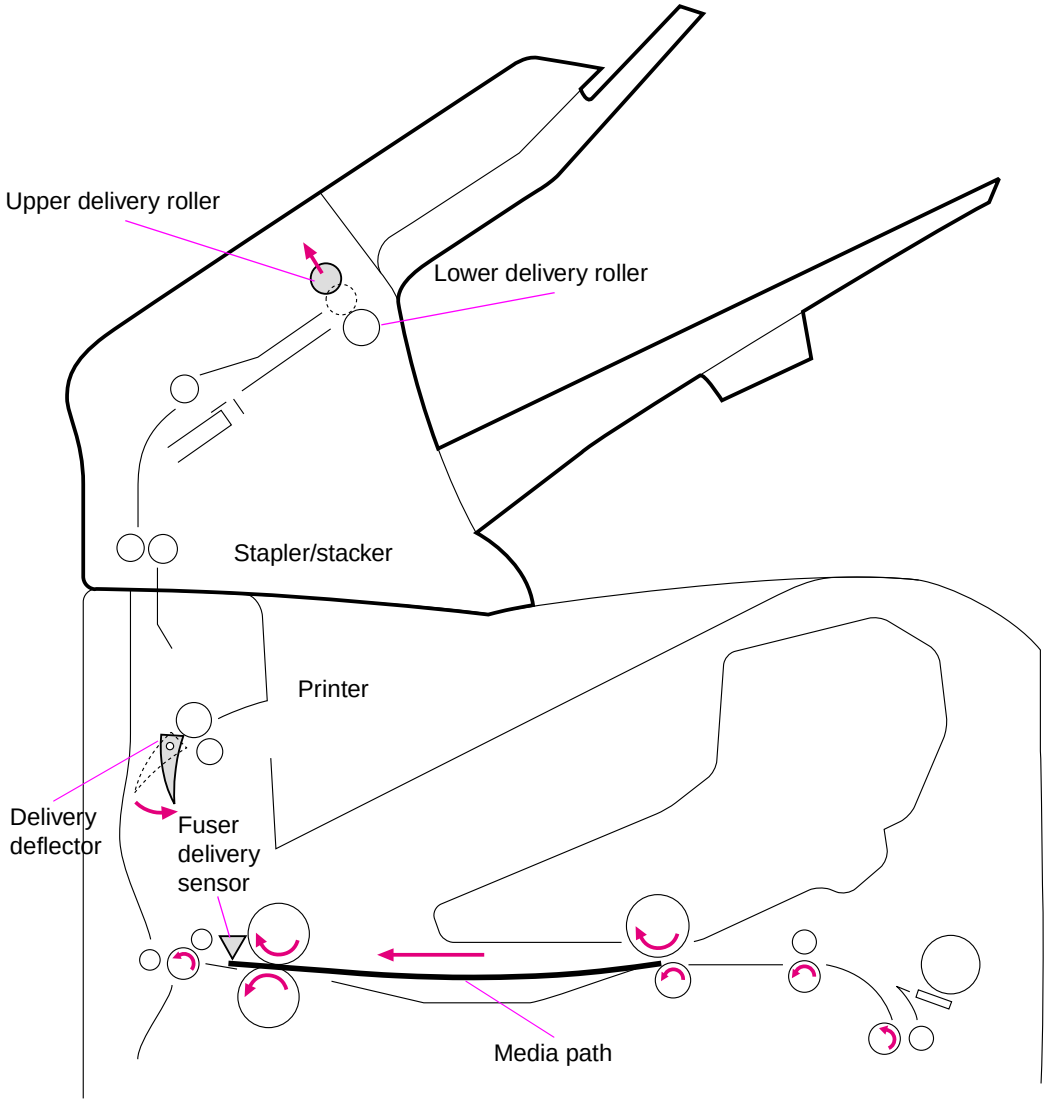

Figure 37. **Staple mode feed and delivery diagram (1 of 6)**

Download Free Service Manual at http://printer1.blogspot.com

The jogger guide motor (M1101) moves the jogger guides to the waiting position, and the stapler/stacker driver PCA again activates the paddle motor (M1101) counterclockwise to engage the upper and lower delivery rollers.

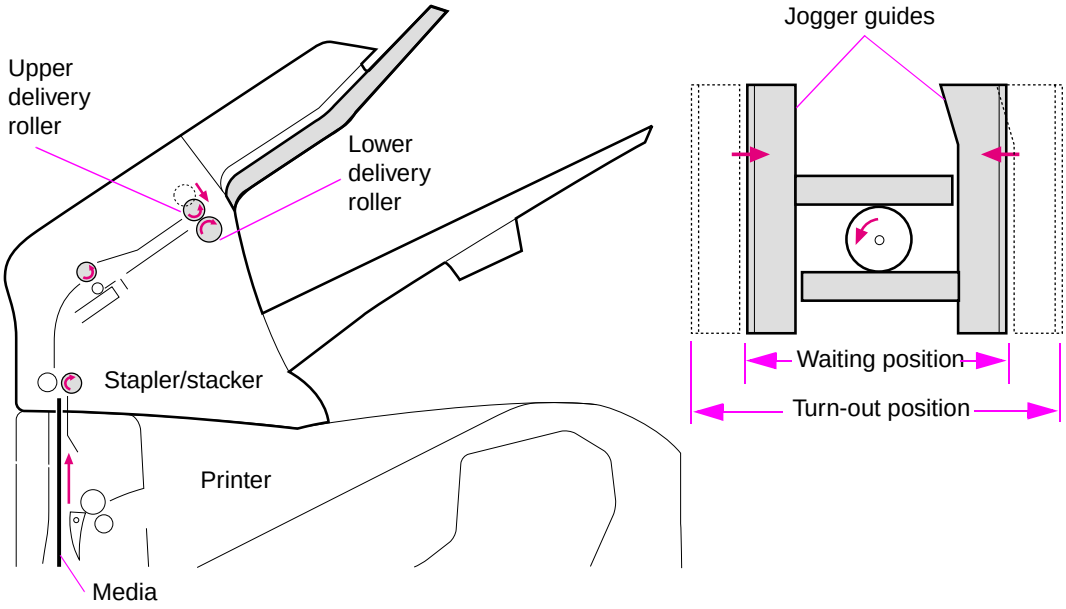

Figure 38. **Staple mode feed and delivery diagram (2 of 6)**

At a specific time after the paper inlet sensor (PS1101) detects the *leading* edge of the media, the stapler/stacker PCA changes the speed of the feed motor (M1103) to synchronize the feed rollers with the speeds of the other stapler/stacker motors and rollers. The stapler/stacker PCA then activates the paddle motor (M1101) counterclockwise to again disengage the upper and lower delivery rollers. The delivery deflector returns to its normal position.

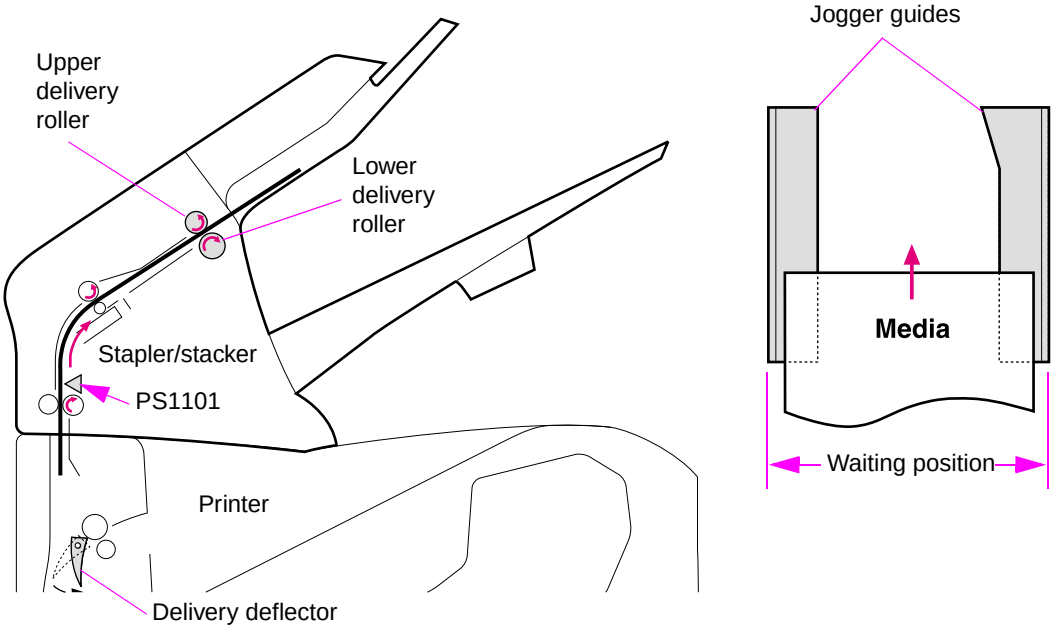

Figure 39. **Staple mode feed and delivery diagram (3 of 6)**

Download Free Service Manual at http://printer1.blogspot.com

At a specific time after the paper inlet sensor (PS1101) detects the *trailing* edge of the media, the stapler/stacker driver PCA activates the clamp solenoid (SL1102). The clamp keeps the page from being pushed out of position by the pages that follow.

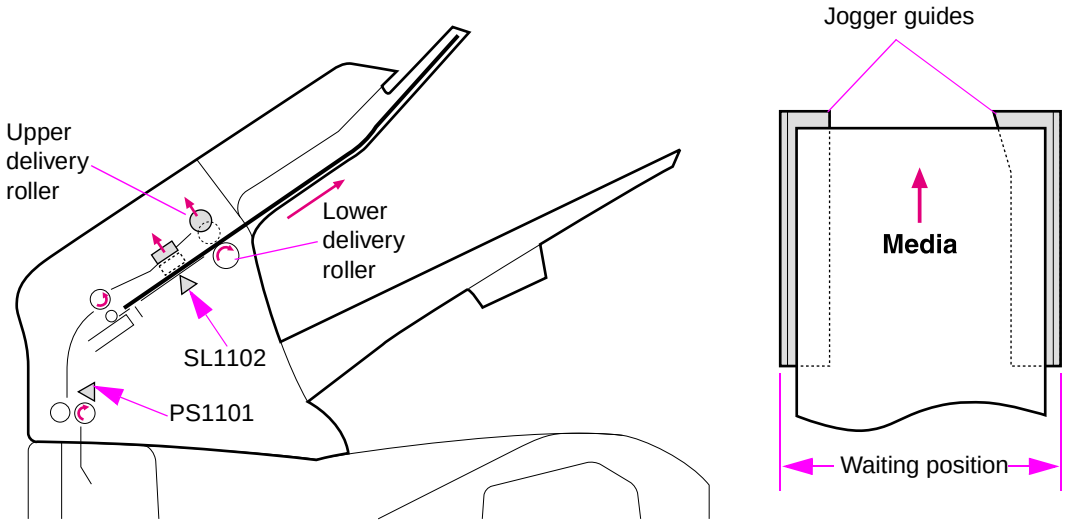

Figure 40. **Staple mode feed and delivery diagram (4 of 6)**

The stapler/stacker now operates according to the following conditions.

- Is this the last page in the staple job
  - **No**. The feed motor (M1101) changes speed and another page enters the stapler/stacker. The stapler/stacker driver PCA activates the jogger motor and the jogger guide moves to align the media stack horizontally. The stapler/stacker driver PCA activates the paddle motor and the paddle pushes the page up against a guide to align the media stack vertically. The delivery deflector moves into position to allow the next page to enter the stapler/stacker.
  - **Yes**. The feed motor (M1101) turns off. The stapler/stacker driver PCA activates the jogger motor and the jogger guides move inward to align the media stack horizontally. The stapler/stacker driver PCA activates the paddle motor and the paddle pushes the page up against a guide to align the media stack vertically. Then the pages are stapled.

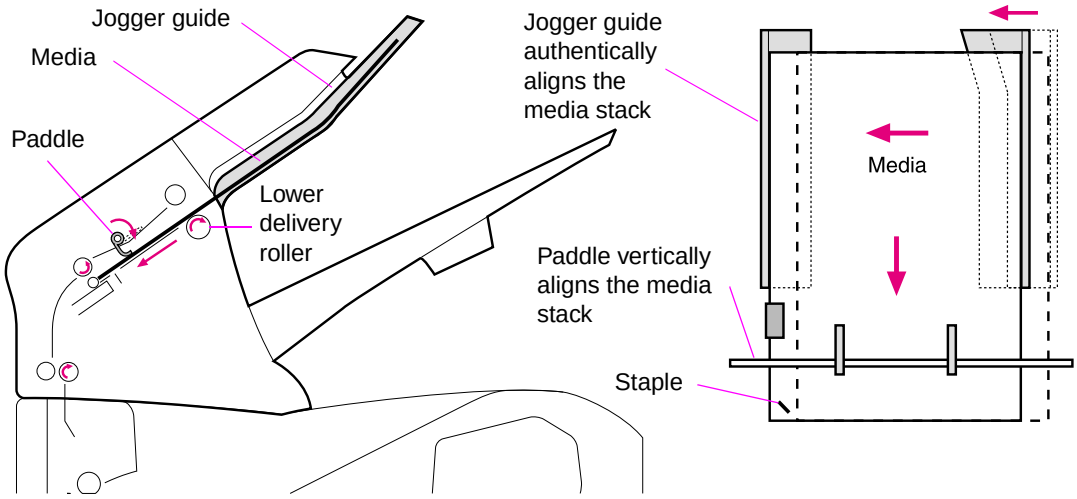

Figure 41. **Staple mode feed and delivery diagram (5 of 6)**

Download Free Service Manual at http://printer1.blogspot.com

After the pages are stapled, the stapler/stacker driver PCA activates the feed motor (M1103; counterclockwise) to again engage the upper and lower delivery rollers. The stapled stack is moved all of the way out onto the jogger guides. The stapler/stacker driver PCA activates the jogger motor (M1102) to move the jogger guide into the turn-out position and allow the stack to drop into the delivery bin.

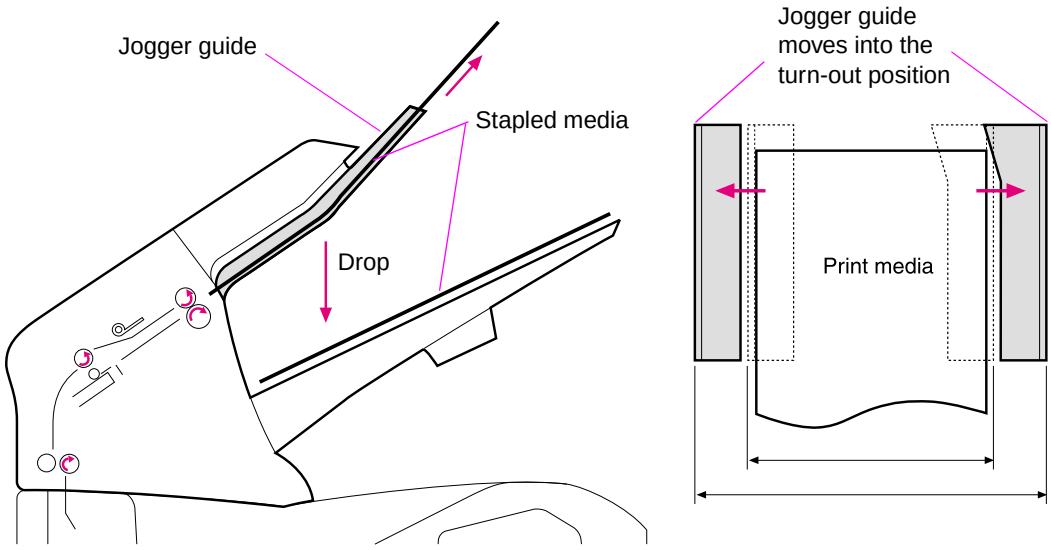

Figure 42. **Staple mode feed and delivery diagram (6 of 6)**

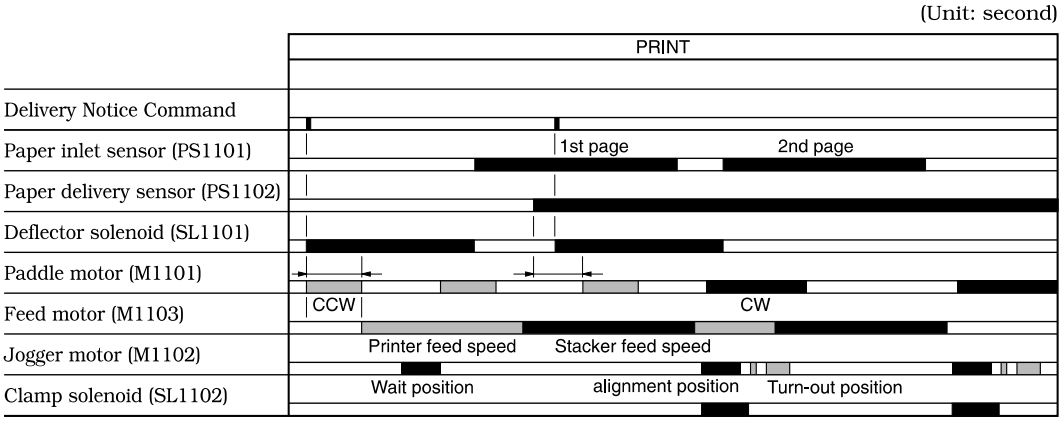

Figure 43. **Staple mode timing diagram**

Download Free Service Manual at http://printer1.blogspot.com

Stapler unit

The major components of the stapler unit are the stapler motor (M104), the staple cartridge, the staple-detection switch, and the staple-module home-position switch. The staple cartridge holds a maximum of 1,000 staples. The stapler/stacker driver PCA controls the stapler unit.

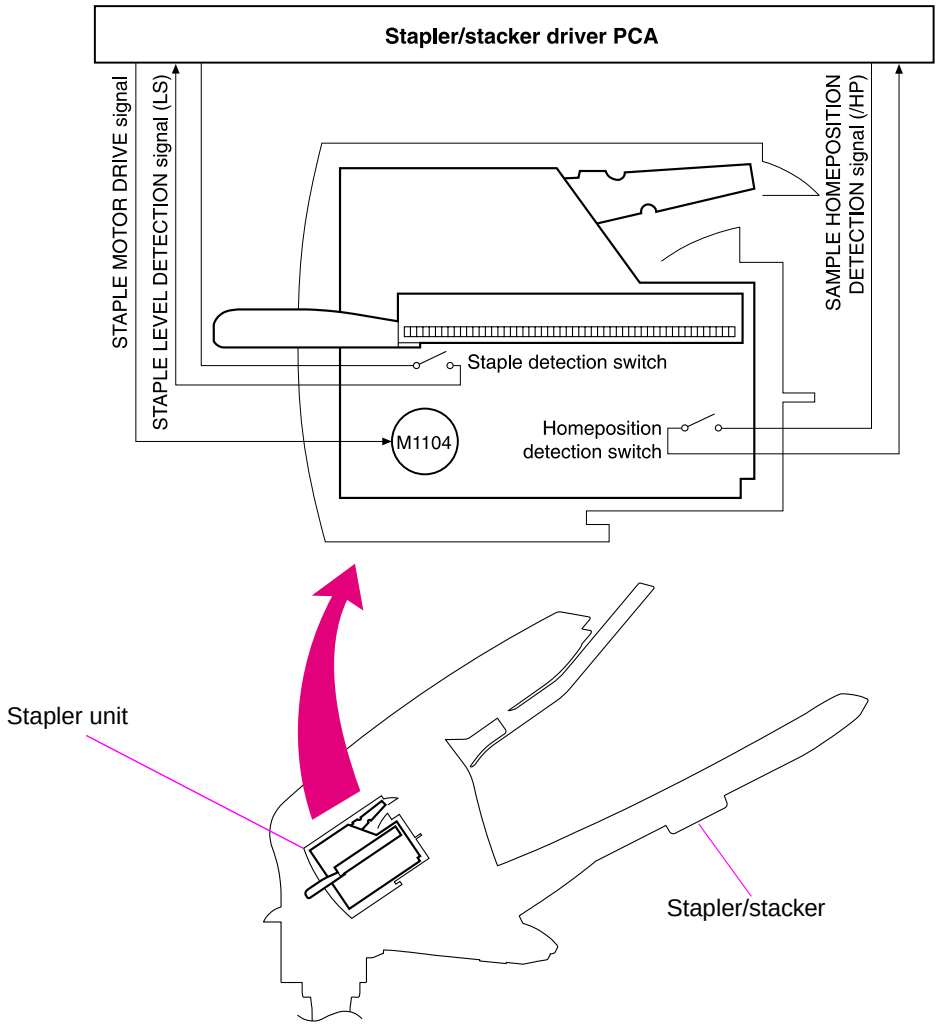

Figure 44. **Stapler unit I/O block diagram**

Download Free Service Manual at http://printer1.blogspot.com

Stapler unit operation

The stapler unit uses the stapler unit motor (M104), staple cam, staple press head plates, staple arm, and support base to staple media together. The staple mode is enabled by using the printer's settings (see "Stapler/stacker submenu" on page 51). The stapling procedure begins when media enters the staple guide and the DC controller PCA sends the end-of-job signal to the stapler/stacker driver PCA.

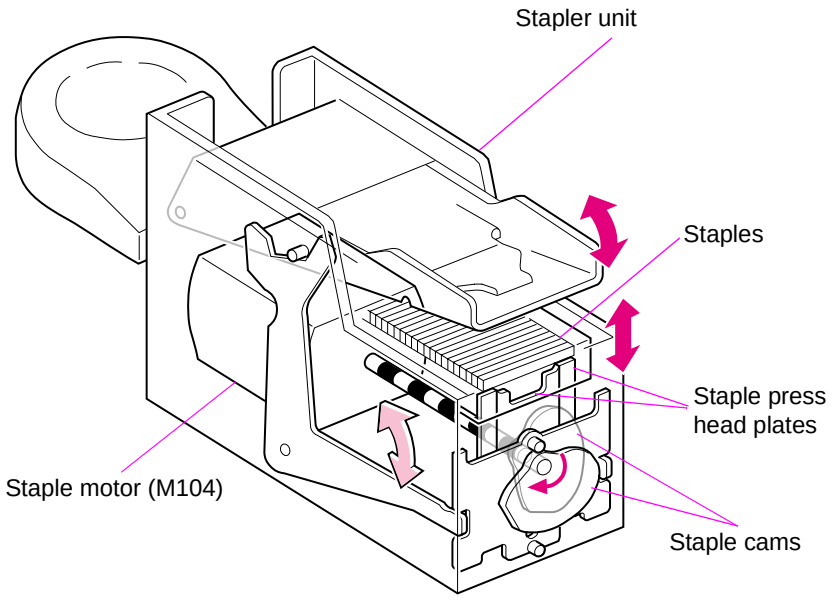

Figure 45. **Stapler unit**

After the paddle and jogger guides align the edges of the media, the stapler/stacker PCA activates the stapler unit motor (M104). The two staple cams begin to rotate.

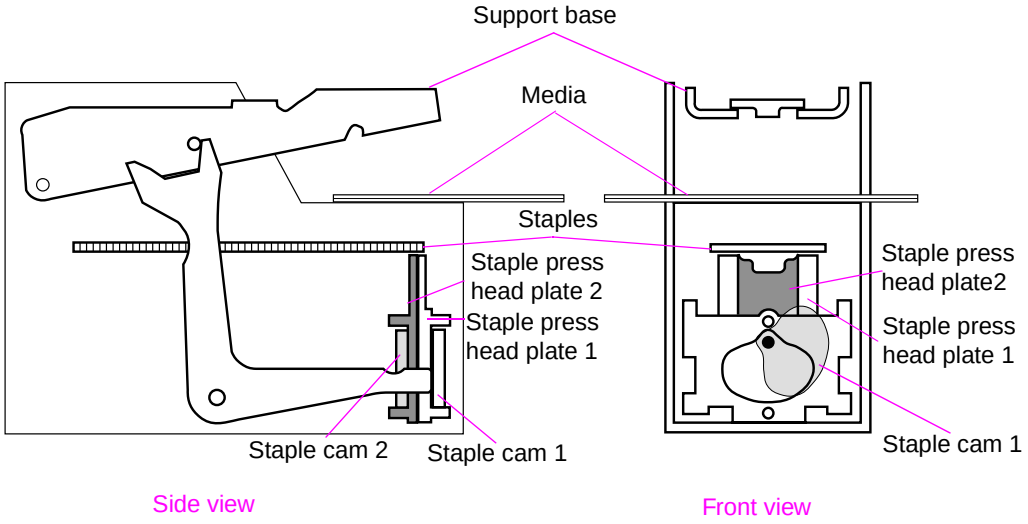

Figure 46. **Staple operation (1 of 3)**

Download Free Service Manual at http://printer1.blogspot.com

As staple cam 1 rotates, it raises the staple press head plate 1. This forms the flat staple into a “u” shape. While this is happening, the staple arm raises the swing guide.

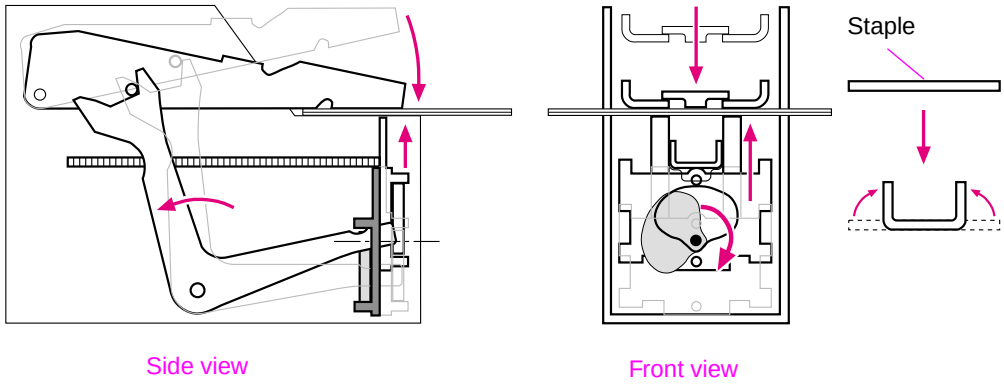

Figure 47. **Staple operation (2 of 3)**

As staple cam 2 rotates, it raises staple press head plate 2. This pushes the staple up and through the media. The staple arm raises the back end of the support base, bringing its front end in contact with the staple legs that protrude through the media and folding them to complete the staple operation.

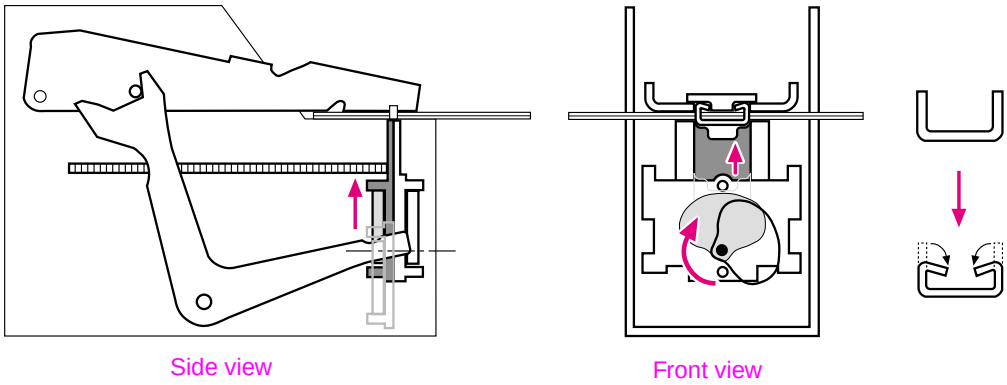

Figure 48. **Staple operation (3 of 3)**

Download Free Service Manual at http://printer1.blogspot.com

Staple level detection

The stapler/stacker driver PCA uses the staple-detection switch to detect the presence and number of staples in the stapler unit. A spring on the staple-detection switch holds the staple-detection flag in the raised position. When this flag is fully raised, the switch is open.

There is a slot cutout in the bottom of the staple cartridge. If the staple cartridge is mostly full of staples, the staples block the staple-detection flag's movement so that it cannot move to its raised position. The staple-detection switch is closed, and the stapler/stacker driver PCA determines that there are at least 70 staples in the cartridge. When less than 70 staples are left in the cartridge, the staple-detection flag is no longer blocked and moves to the raised position. The staple-detection switch opens, and the stapler/stacker driver PCA determines there is low-staple condition.

A low-staple message appears on the control-panel display. After the stapler/stacker PCA sends the staple command 70 more times, a staple out message appears on the control-panel display. See "Alphabetical printer messages" on page 258.

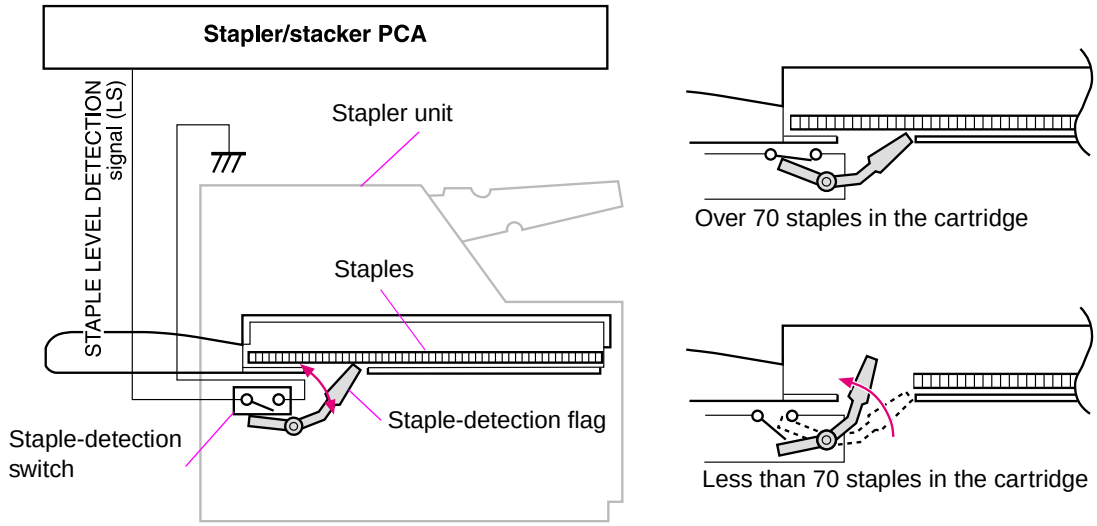

Figure 49. **Staple level detection**

Stack mode feed and delivery

In this mode, media is stacked in the delivery bin without being stapled.

After the *leading* edge of the media reaches the fixing delivery sensor (PS108),the DC controller PCA sends a signal to the stacker driver PCA. The stacker driver PCA activates the deflector solenoid (SL101) for a specific amount to move the delivery deflector into place which routes the media to the stacker rather than to the printer's top output bin. The stacker driver PCA also activates the stacker motor (which rotates at the same speed as the printer's main motor) to rotate the feed and delivery rollers.

The feed roller moves the media into the stacker. If the DC controller PCA sends a following-page signal (meaning there is another page in the job), the stacker driver PCA again activates the deflector solenoid (SL101). The delivery rollers move the media to the delivery bin.

Download Free Service Manual at http://printer1.blogspot.com

Stapler/stacker jam detection

The following sensors detect the presence of media in the stapler/stacker and determine whether the media is feeding properly or jamming. For information about the location of these sensors, see "Stacker and stapler/stacker switches and sensors" on page 345.

- Paper inlet sensor (PS1101)
- Paper delivery sensor (PS102)

Stapler/stacker feed jam

If the paper inlet sensor (PS1101) does not detect the *leading* edge of the media within a specific time after the stacker driver has received the paper delivery signal, the DC controller PCA determines that a stapler/stacker feed delay jam has occurred.

The transport process is stops and a `13.XX.YY JAM` message appears on the control-panel display. For more information about jam messages, see "Alphabetical printer messages" on page 258 and "Numerical printer messages" on page 274.

Stapler/stacker feed stationary jam

If the paper inlet sensor (PS1101) does not detect the *trailing* edge of the media within a specific time after the paper inlet sensor (PS1101) detected the *leading* edge of the media, the DC controller PCA determines that a stapler/stacker feed delay jam has occurred.

The transport process is stops and a `13.XX.YY JAM` message appears on the control-panel display. For more information about jam messages, see "Alphabetical printer messages" on page 258 and "Numerical printer messages" on page 274.

Stapler/stacker delivery jam

If the paper delivery sensor (PS1102) does not detect the *trailing* edge of the media within a specific time after the feed motor has been activated following the completion of the stapling operation, the DC controller PCA determines that a stapler/stacker feed delay jam has occurred.

The transport process is stops and a `13.XX.YY JAM` message appears on the control-panel display. For more information about jam messages, see "Alphabetical printer messages" on page 258 and "Numerical printer messages" on page 274.

Stapler/stacker residual media jam

If the paper inlet sensor (PS1101) or the paper delivery sensor (PS1102) detect media during the initial drive period, the DC controller PCA determines that a stapler/stacker feed delay jam has occurred.

The transport process is stops and a `13.XX.YY JAM` message appears on the control-panel display. For more information about jam messages, see "Alphabetical printer messages" on page 258 and "Numerical printer messages" on page 274.

Note This jam *only* occurs if the paper delivery senor (PS1102) detects media at the *start* of the initial drive.

Download Free Service Manual at http://printer1.blogspot.com

Image-formation system

The image-formation system is the main system in the printer. It consists of five stages:

- Electrostatic latent (potential) image formation
  During this operation a uniform negative charge is applied to the surface of the photosensitive drum in the print cartridge. The drum is then exposed to the laser beam from the laser/scanner which neutralizes portions of the drum to create the electrostatic latent image, which is invisable.
- Developing the image
  Toner is applied to the drum. The image is now visible.
- Transferring the image
  The toner is transferred to the media and the media is separated from the photosensitive drum.
- Fusing the image
  Heat and pressure are applied to the media and the toner is permanently bonded to the media.
- Cleaning the transfer charging roller and photosensitive drum
  Residual (left over) toner is cleaned off of the transfer charging roller (this toner is transferred to the photosensitive drum) and then off of the photosensitive drum.

When the DC controller PCA receives the print signal, it drives the main motor, which rotates the photosensitive drum (the HP LaserJet 4300 uses a separate print cartridge motor to rotate the drum), the developing cylinder, the primary charging roller, the transfer charging roller, and the fuser pressure roller.

The primary charging roller places a uniform negative charge on the surface of the photosensitive drum.Mogulated laser beams strike the drum to form an electrostatic latent image.

The latent image formed on the photosensitive drum changes to a visual image when toner on the developing cylinder is transferred to the drum. The transfer charging roller transfers the image to the media. The fuser applies heat and pressure to permanently bond the image on the media. Then, residual toner on the photosensitive drum surface is scraped off with the cleaning blade.

The cartridge has a toner sensor that detects the presence of the cartridge and the remaining toner level.

If the toner in the cartridge becomes lower than a specific level, or if there is no cartridge in the printer, an error message appears on the control-panel display. See “Alphabetical printer messages” on page 258 or “Numerical printer messages” on page 274.

Download Free Service Manual at http://printer1.blogspot.com

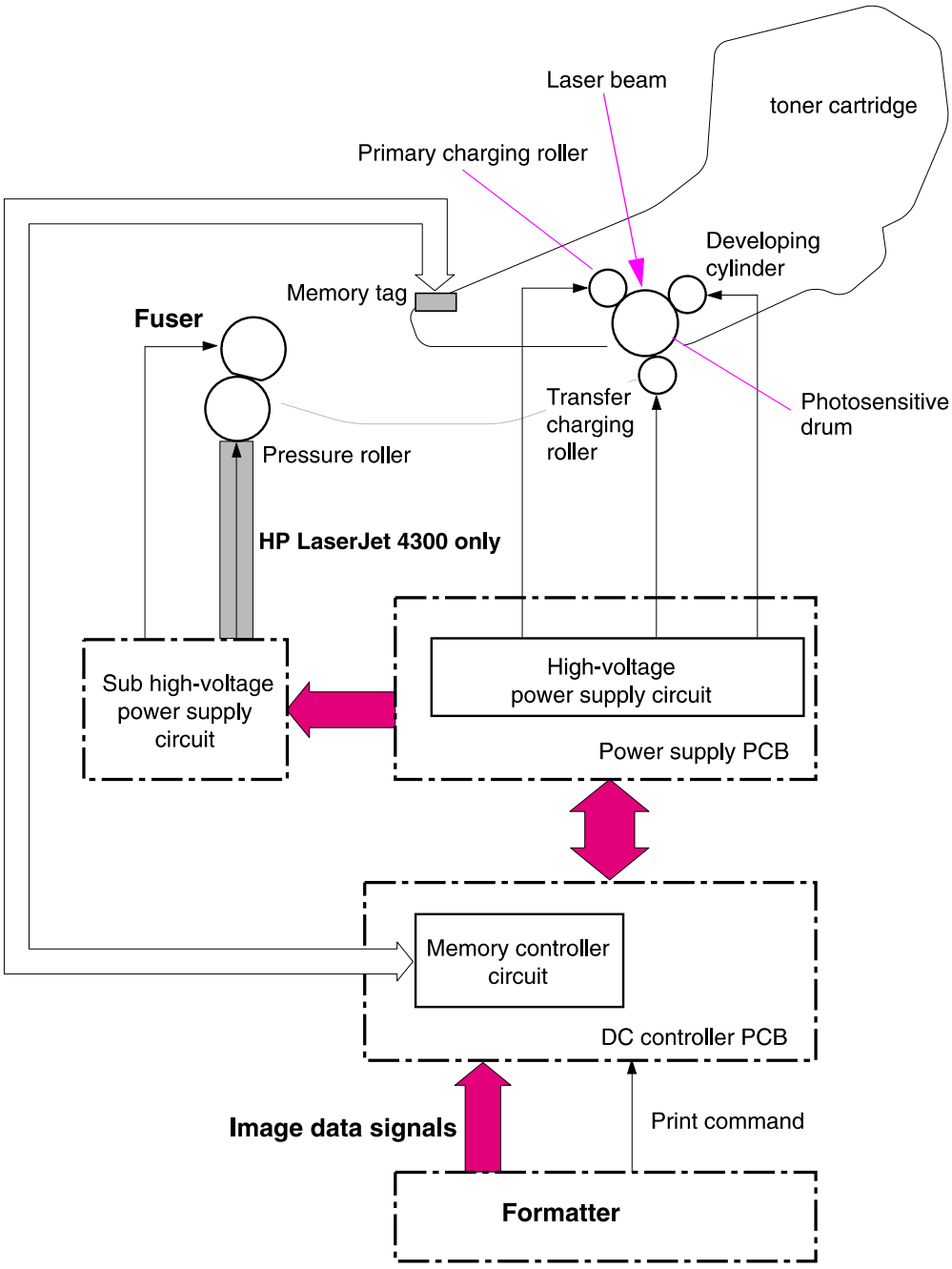

Figure 50. **Image formation block diagram**

Download Free Service Manual at http://printer1.blogspot.com

Electrostatic latent-image formation

Forming the electrostatic latent image on the photosensitive drum requires applying a uniform negative charge (bias) to the surface of the drum and then the exposing it to the laser beam. The laser beam naturalizes the section of the drum so that it attracts toner during the developing operation.

Primary charging

The conditioning process consists the primary charging roller applying a uniform negative charge on the surface of the drum. The primary charging roller is coated with conductive rubber that has an ac bias applied. This erases any residual charges and maintains a constant drum surface charge. The print density setting modifies the amount of dc voltage.

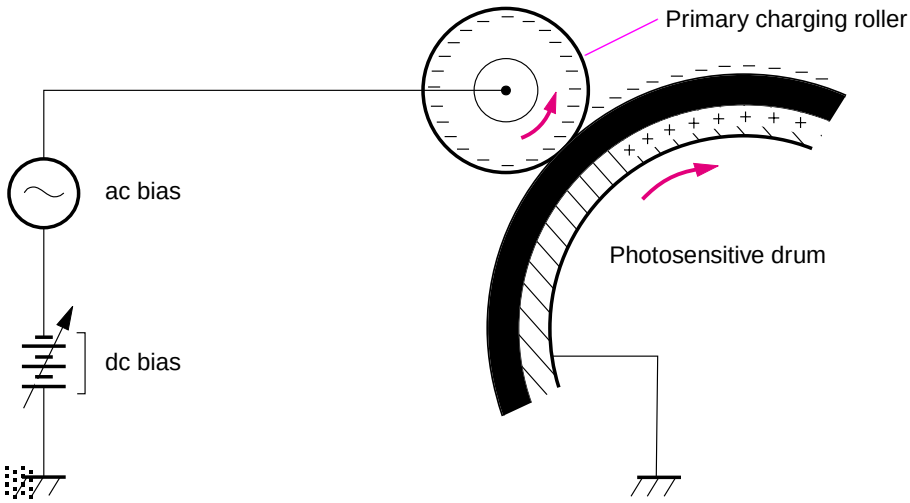

Figure 51. **Primary charging of the photosensitive drum**

Download Free Service Manual at http://printer1.blogspot.com

Writing the image

The laser/scanner contains two diodes in the laser unit. During the writing process, the modulated laser diodes project two beams onto the rotating six-sided scanning mirror. As the mirror rotates, the beams reflect off the mirror, through a set of focusing lenses, through a slot in the top of the toner cartridge, and onto the photosensitive drum. The beams sweep the drum from left to right, discharging the negative potential wherever the beams strike the surface. This creates a latent electrostatic image, which later is developed into a visible image.

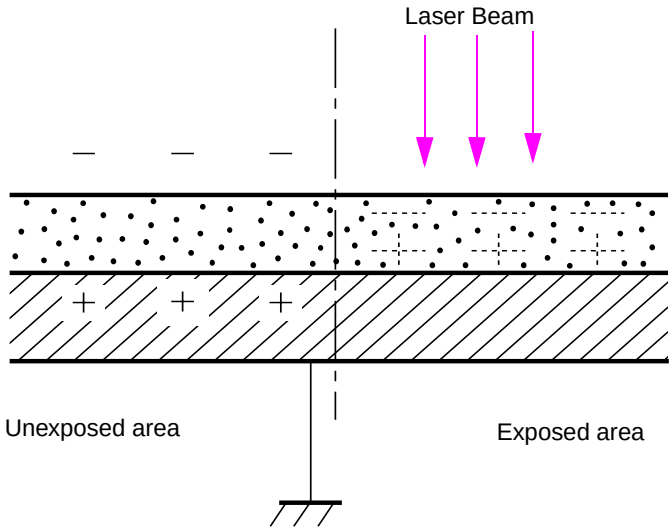

Figure 52. **Writing the image to the photosensitive drum**

Because the beams are sweeping the entire length of the drum and the drum is rotating, the entire surface area of the drum can be covered. The speed of the scanner motor (which turns the scanning mirror) and the speed of the main motor (which turns the drum) are synchronized, and each successive sweep of a beam is offset by 1/1200th of an inch. The beams can be turned on and off to place a dot of light every 1/1200th of an inch. This is how the printer achieves its true 1200 by 1200 dpi resolution. After the writing process, the drum surface has an invisible (latent) electrostatic image.

At the beginning of each sweep, the beams strike the beam detect mirror and PCB, generating the beam detect (BD) signal. The BD signal is sent to the DC controller PCA, where it is converted to an electrical signal this is used to synchronize the output of video data for one sweep (two scan lines) and to diagnose problems with the laser diode or scanner motor.

Download Free Service Manual at http://printer1.blogspot.com

Developing the image

The developing process makes the latent electrostatic image a visible image on the drum. The developing unit consists of a metallic cylinder that rotates around a fixed magnetic core inside the toner cavity. Toner is a powdery substance made of black plastic resin bound to iron particles, which is uniformly attracted to the magnetic core of the cylinder.

The toner particles obtain a negative surface charge by rubbing against the developing cylinder, which is connected to a negative dc supply. The negatively charged toner is attracted to the discharged (exposed, grounded) areas on the drum. An ac potential is applied to the developing cylinder to decrease the attraction between the toner and the magnetic core of the cylinder, and to increase the repelling action of the toner against the areas of the drum that have not been exposed to the laser beam. This ac potential improves density and contrast.

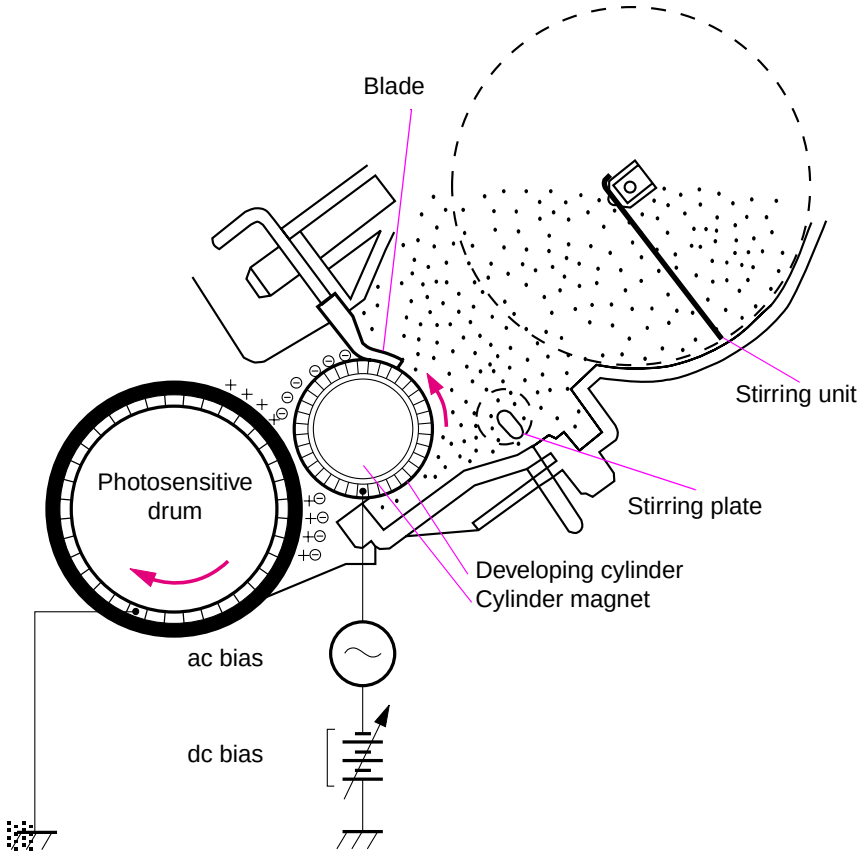

Figure 53. **Developing the image**

The print-density control in the print-quality menu adjusts the dc bias of the developing cylinder by changing the force of attraction between the toner and drum. A change in the dc bias causes either more or less toner to be attracted to the drum, which in turn either increases or decreases the print density. Both the primary and developer dc bias voltages are changed in response to the density setting.

Download Free Service Manual at http://printer1.blogspot.com

Transferring the image

During the transferring process the toner image on the drum surface is transferred to the paper. A positive charge that the transfer roller applies to the back of the media causes the negatively charged toner on the drum surface to be attracted to the sheet of media.

The small diameter of the drum, combined with the stiffness of the paper, causes the paper to peel away from the drum. The static eliminator teeth also help separate the paper from the drum. The static eliminator teeth weaken the attractive forces between the negatively charged drum surface and the paper.

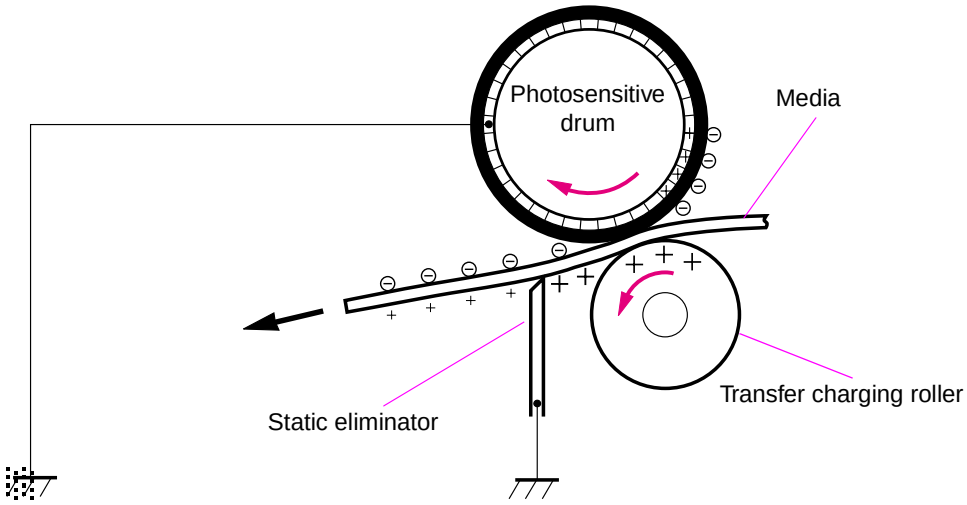

Figure 54. **Transferring the image**

Download Free Service Manual at http://printer1.blogspot.com

Fusing the image

The image is only held in place by electrostatic attraction when it is transferred from the drum to the media. The lightest touch will smear it. During the fusing process, heat and pressure fuse the image to the media to produce a permanent image. The media passes between a heated fusing roller and a soft pressure roller. This melts the toner and presses it into the media.

This printer utilizes an on-demand fusing method. This method has fast temperature-rising time, which shortens the wait time (the time it takes to heat the fuser to its operating temperature). It is not necessary to supply power to the fuser heater during the standby mode which conserves energy.

For the HP LaserJet 4200, a dc negative bias (charge) is applied to the fixing film. This stabilizes the toner so that it does not scatter the toner over the media and produce a blurred image.

For the HP LaserJet 4300, a dc negative bias (charge) is applied to the fixing film and a dc positive bias (charge) is applied to the pressure roller. This stabilizes the toner so that it does not scatter the toner over the media and produce a blurred image.

To prevent offset images, the surface of the fixing film is coated with fluorine for both printer models.

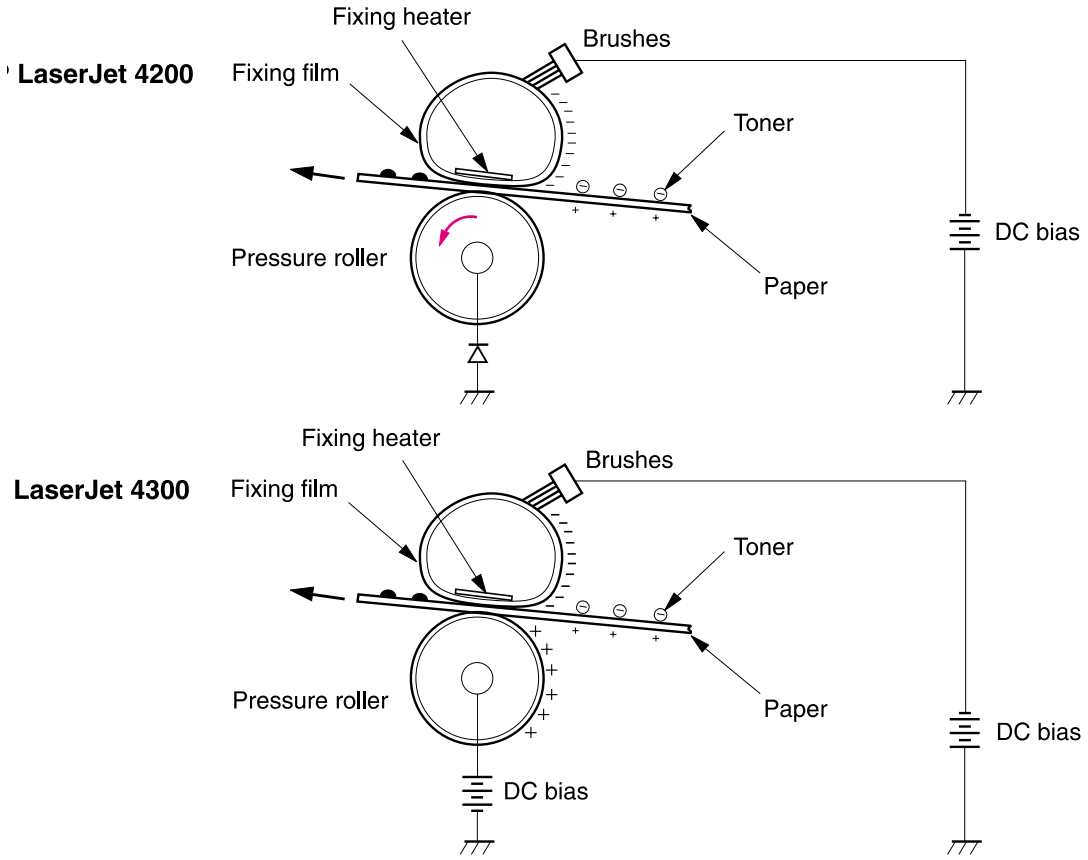

Figure 55. **Fusing the image**

Download Free Service Manual at http://printer1.blogspot.com

Cleaning the transfer charging roller and photosensitive drum

Residual (left over) toner is cleaned off of the transfer charging roller and photosensitive drum so that subsequent images are crisp and clear. Because not all of the toner is attracted to the media when the image is transferred from the drum, some toner remains on the drum. Toner may also remain on the transfer roller if a jam occurs and the transfer of toner to the media operation is not completed.

A dc negative bias (charge) is applied to the transfer charging roller opposite the photosensitive drum, which causes the residual toner to be attracted to the drum.

A cleaning blade is in contact with the surface of the drum at all times. As the drum rotates during printing, excess toner from the transfer charging roller and drum are scraped off and stored in the waste-toner receptacle.

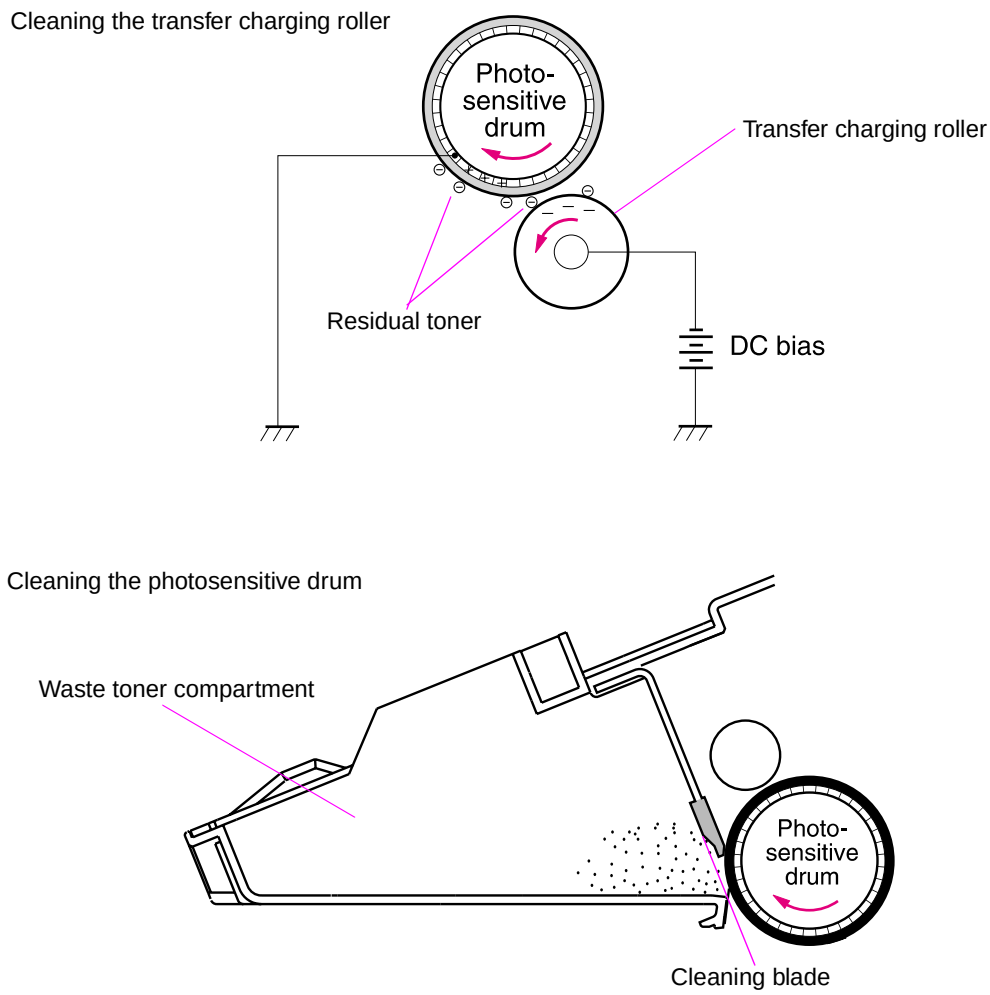

Figure 56. **Cleaning the transfer charging roller and photosensitive drum**

Download Free Service Manual at http://printer1.blogspot.com

Print cartridge memory chip

The print cartridge memory chip is a non-volatile memory device built into the print cartridge. It stores information about the cartridge. The DC controller PCA reads and writes memory data to the memory chip to monitor the print cartridge usage and condition. The DC controller PCA reads and writes to the memory chip at specific times. If the read-write process fails four times in a row, the DC controller PCA detects a print cartridge memory failure and a `10.00.00 SUPPLIES MEMORY ERROR` error message appears on the control-panel display (see "Numerical printer messages" on page 274).

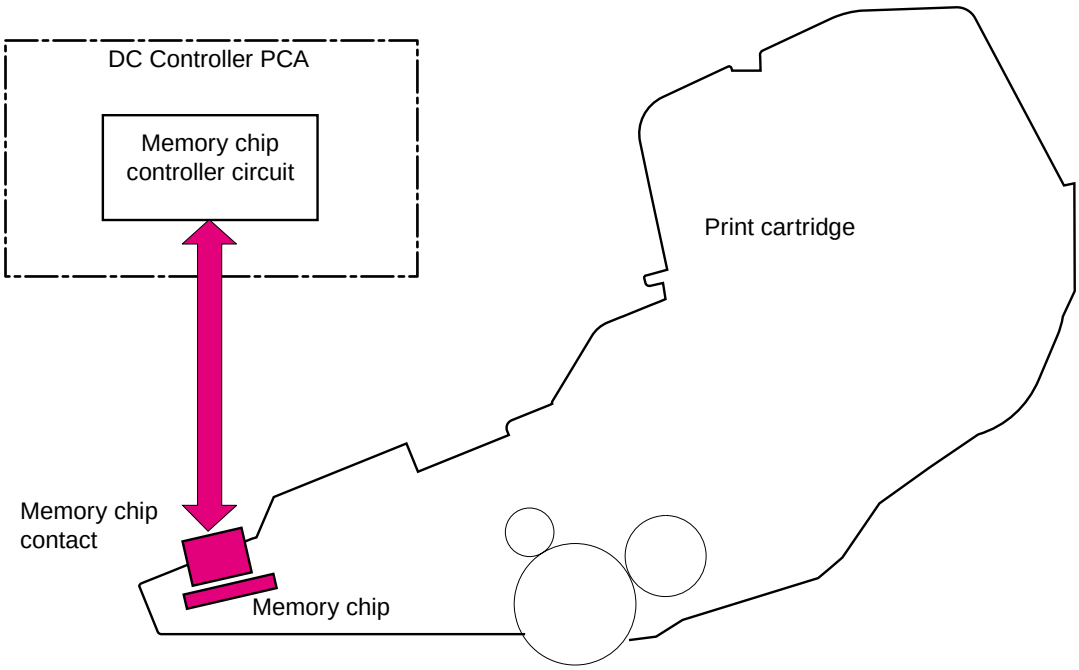

Figure 57. **Print cartridge memory chip**

Download Free Service Manual at http://printer1.blogspot.com

Formatter system

The formatter is responsible for the following procedures:

- Controlling the PowerSave mode
- Receiving and processing print data from the various printer I/Os
- Monitoring control panel functions and relaying printer status information (through the control panel and the bidirectional I/O)
- Developing and coordinating data placement and timing with the DC controller PCA
- Storing font information
- Communicating with the host computer through the bidirectional interface

The formatter receives a print job from the bidirectional interface and separates it into image information and instructions that control the printing process. The DC controller PCA synchronizes the image formation system with the paper input and output systems, and then signals the formatter to send the print image data.

The formatter also provides the electrical interface and mounting locations for two EIO cards, additional memory DIMMs, the hard-disk accessory, and the optional HP Fast Infrared Receiver.

PowerSave

This feature in the configuration menu conserves power after the printer has been idle for an adjustable period of time. When the printer is in PowerSave mode, the control panel backlight is turned off, but the printer retains all printer settings, downloaded fonts, and macros. The default setting is `POWERSAVE=ON`, with a 30-minute idle time. PowerSave can also be turned `OFF` from the resets menu on the control panel.

The printer exits PowerSave mode and enters the warm-up cycle when any of the following occurs:

- A print job, valid data, or a PML or PJL command is received at the parallel port, serial port, FIR port, or EIO card
- A control panel key is pressed
- The top cover is opened
- A paper tray is opened
- The engine test button is pressed

Note Printer error messages override the PowerSave message. The printer enters PowerSave mode at the appropriate time, but the error message continues to appear.

Resolution Enhancement technology

The formatter contains circuitry for Resolution Enhancement technology (REt), which modifies the standard video dot data on its way to the DC controller PCA to produce “smoothed” line edges. The REt can be turned on or off from the control panel or from some software applications. The default setting is medium.

Note The REt settings sent from software applications or printer drivers override the control-panel settings.

Download Free Service Manual at http://printer1.blogspot.com

EconoMode

The EconoMode setting uses up to 50 percent less toner than standard mode printing by reducing the dot density. However, EconoMode does not extend the life of toner cartridge components. EconoMode, which can be thought of as “draft mode,” can be selected from the control panel (print-quality menu) and through some software applications and printer drivers. The default setting is OFF.

CAUTION HP does not recommend full-time use of EconoMode. If EconoMode is used full-time, it is possible that the toner supply will outlast the mechanical parts in the toner cartridge.

Note EconoMode does not affect print speed or memory usage, or extend the life of the toner cartridge.

Input/output

Parallel interface

The formatter receives incoming data through its bidirectional interface (IEEE-1284). The I/O provides high-speed and two-way communication between the printer and the host, allowing the user to change printer settings and monitor printer status from the host computer. The user can configure the HIGH SPEED item in the control panel. The default setting, YES, makes it possible for the I/O to run at the higher speeds supported by most newer computers. When set to NO, the parallel interface runs at the slower mode that is compatible with older computers. The user can also configure the ADVANCED FUNCTIONS item. The default setting, ON, accommodates two-way parallel communications. The OFF mode disables the advanced functionality. The I/O is compatible with the bidirectional parallel interface standard.

Expanded I/O

The optional expanded I/O (EIO) card can be installed in the slots provided on the formatter. It provides automatic I/O switching between multiple computers or networks connected to the printer.

Flash

Optional flash is available in 2 MB and 4 MB flash memory DIMMs for storing forms, fonts, and signatures.

Hard-disk accessory

The optional hard-disk accessory can be mounted in one of the EIO slots on the rear of the formatter. The optional EIO-based hard disk is used for creating multiple original prints (mopies) and storing forms, fonts, and signatures.

CPU

The HP LaserJet 4200 series printer formatter incorporates a 300 MHz RISC processor.

The HP LaserJet 4300 series printer formatter incorporates a 350 MHz RISC processor.

Download Free Service Manual at http://printer1.blogspot.com

Printer memory

If the printer encounters difficulty managing available memory, a clearable warning message appears on the control panel.

Some printer messages are affected by the auto-continue and clearable warning settings from the configuration menu on the printer control panel. If `CLEARABLE WARNING=JOB` is set on the control panel, warning messages appear on the control panel until the end of the job from which they were generated. If `CLEARABLE WARNING=ON` is set, warning messages appear on the control panel until Go is pressed. If an error occurs that prevents printing and `AUTO CONTINUE=ON` is set, the printer goes offline for 10 seconds before it returns online. If `AUTO CONTINUE=OFF` is set, the message appears until Go is pressed.

Read-only memory

Besides storing microprocessor control programs, the read-only memory (ROM) stores dot patterns of internal character sets (fonts).

Random-access memory

The random-access memory (RAM) contains the page, I/O buffers, and the font storage area. It stores printing and font information received from the host system, and can also serve to temporarily store a full page of print-image data before the data is sent to the print engine. Memory capacity can be increased by adding DIMMs to the formatter. Note that adding memory (DIMMs) might also increase the print speed for complex graphics.

DIMM slots

The DIMM slots can be used to add memory, fonts, or firmware upgrades.

Firmware DIMM

To upgrade printer firmware, insert a new firmware DIMM in DIMM slot 1 (the uppermost slot) inside the formatter assembly. See “Firmware DIMM” on page 160.

CAUTION The firmware DIMM *must* be installed in slot 1 (formatter PCA location J1; top-most slot)

Nonvolatile memory

The printer uses nonvolatile memory (NVRAM) to store I/O and information about the print environment’s configuration. The contents of NVRAM are retained when the printer is turned off or disconnected.

Memory Enhancement technology

The HP Memory Enhancement technology (MEt) effectively doubles the standard memory through a variety of font- and data-compression methods.

Note The MEt is only available in PCL mode; it is not functional when printing in PS mode.

Download Free Service Manual at http://printer1.blogspot.com

PJL overview

Printer job language (PJL) is an integral part of configuration, in addition to the standard printer command language (PCL). With standard cabling, PJL allows the printer to perform functions such as:

- Two-way communication with the host computer through a bidirectional parallel connection. The printer can tell the host about such things as the control panel settings, and it allows the control panel settings to be changed from the host.
- Dynamic I/O switching allows the printer to be configured with a host on each I/O. The printer can receive data from more than one I/O simultaneously, until the I/O buffer is full. This can occur even when the printer is offline.
- Context-sensitive switching allows the printer to automatically recognize the personality (PS or PCL) of each job and configure itself to serve that personality.
- Isolation of print environment settings from one print job to the next. For example, if a print job is sent to the printer in landscape mode, the subsequent print jobs print in landscape only if they are formatted for landscape printing.

PML

The printer management language (PML) allows remote configuration and status readback through the I/O ports.

Control panel

The formatter sends and receives printer status and command data to and from a control panel PCA.

Download Free Service Manual at http://printer1.blogspot.com

6 Removing and replacing parts

Contents

Removal and replacement strategy 133
Required tools 133
Before performing service 133
After completing service 133
Screws used in the printer 134
Parts-removal tree 135
Printer input tray, and cabinet wheel locks 136
User-replaceable parts 137
Print cartridge 137
Transfer roller 138
Tray 1 pickup roller 139
Tray 1 separation pad 140
Tray 2 feed rollers 141
Covers, tray 1, and the rear output bin 143
Accessory covers and the tray 2 extension door 143
Formatter cover 145
Top cover 146
Right-side cover 149
Left-side cover 151
Tray 1 152
Rear output bin 155
Control-panel display 156
Control-panel overlay 156
Control-panel assembly 157
Internal components 160
Firmware DIMM 160
Formatter assembly 161
Fuser 162
Output delivery assembly 163
Duplexing pendulum assembly 165
Tray 2 media-size sensor 167
Main cooling fan (left side) 168
Cooling fan (right side; HP LaserJet 4300 series printer only) 170
Laser/scanner assembly 173
Print-cartridge motor (HP LaserJet 4300 series printer only) 175
Main motor 177
Tray 2 lifter-drive assembly 179
DC controller PCA 181
Paper-pickup assembly, ... 183
Main drive assembly 186
Power supply 188
Paper-feed belt assembly 191

Download Free Service Manual at http://printer1.blogspot.com

Tray 1 paper-pickup assembly 192
Paper feed assembly 195
Registration assembly 198
Transfer assembly 200
Accessories 204
500-sheet feeder assembly 204
500-sheet feed rollers 204
500-sheet feeder right-side cover 204
500-sheet feeder control PCA 207
500-sheet feeder media-size sensor 208
500-sheet feeder lifter-drive assembly 209
500-sheet feeder paper-pickup drive assembly 210
1,500-sheet feeder assembly 214
1,500-sheet feeder feed rollers 214
1,500-sheet feeder separation roller 214
1,500-sheet feeder door 215
1,500-sheet feeder rear cover 217
1,500-sheet feeder right-side cover. 218
1,500-sheet feeder control PCA 220
1,500-sheet feeder media-size sensor 221
1,500-sheet feeder lifter-drive assembly 222
1,500-sheet feeder paper-pickup drive assembly 225

Download Free Service Manual at http://printer1.blogspot.com

Removal and replacement strategy

This chapter describes how to remove, replace, and reassemble the major assemblies of the printer. Replacement is generally the reverse of removal. *To identify the left side and right side of the printer, face tray 1 on the front of the unit*.

WARNING! Unplug the power cord from the power outlet (at the wall receptacle) before attempting to service the product. If you do not follow this warning, severe injury can result. Certain functional checks during troubleshooting might require power to be supplied to the product. However, all power should be turned off and the product should be unplugged when you remove any product assemblies or components. Never operate or service the printer when the protective cover is removed from the laser/scanner assembly. The reflected beams, although invisible, can damage your eyes.

CAUTION The product contains components that are sensitive to electrostatic discharge (ESD). Always perform service work at an ESD-protected workstation. If an ESD-protected workstation is not available, discharge body static by grasping the printer chassis before touching an ESD-sensitive component. Ground the printer chassis *before* servicing the product.

Required tools

- #2 Phillips screwdriver
- small flat-blade screwdriver
- needle-nose pliers
- ESD mat (if available; see the ESD caution above)
- penlight (optional)
- Tape (optional)

CAUTION A PoziDriv screwdriver will damage screw heads on the product. Use a #2 Phillips screwdriver.

Before performing service

- If possible, print a menu map and configuration page. See the "Menu map" on page 240 and"Configuration page" on page 241.
- Remove all of the accessories and print media, the print cartridge, and tray 2 from the product.
- Unplug the power cord from the power outlet at the wall receptacle.
- Place the product on an ESD mat, if one is available. If an ESD-protected workstation is not available, discharge body static by grasping the printer chassis before touching an ESD-sensitive component. Ground the printer chassis *before* servicing the product

After completing service

- Reinstall the print cartridge (remove the print cartridge prior to transporting the printer back to the customer).
- Reconnect all cables to the product.
- Replace all of the accessories and load the media.
- Print a configuration page and verify that the latest firmware is installed on the printer. See "Downloading a remote firmware update" on page 63.

Download Free Service Manual at http://printer1.blogspot.com

Screws used in the printer

This table describes the screws used in the printer and provides guidelines to help determine where each type of screw is used. The screws can vary in length depending on the thickness of the material that is being fastened.

Always note where each type of screw is located and replace each one in its original location.

Hint When you are disassembling the product, place the screws into the chassis holes from which they were removed. This prevents their loss, and ensures that the proper type and length of screw for each location is used when the product is reassembled.

Table 36. Common fasteners used in this product

Drawing and description	Purpose
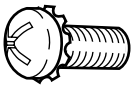 Phillips machine screw with captive star washer	This screw is used to fasten metal to metal when good electrical contact is needed. This screw also provides high resistance to loosening.
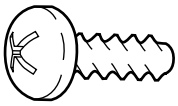 Phillips screw with self-tapping threads	This screw is used to fasten sheet metal or plastic to plastic frames (the deep, coarsely spaced threads provide an increased holding capability while decreasing the possibility of stripping the target hole).
Reinstal note: To install a self-tapping screw, first turn it counterclockwise to align it with the existing thread pattern, and then carefully turn it clockwise to tighten it. You will feel resistance and hear the screw click when it engages the existing threads in the hole. Do not overtighten the screw. If a self-tapping screw-hole becomes stripped, repair the screw-hole or replace the affected assembly.	
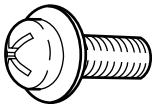 Phillips washer-head machine screw with a broad, flat washer attached to the screw head	This screw is used to fasten sheet metal parts to the sheet metal chassis. It spans large clearance holes and distributes the load by increasing the bearing surface.
Screw measurement guide 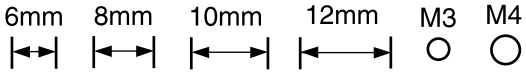	

Download Free Service Manual at http://printer1.blogspot.com

Parts-removal tree

Use the following diagram to determine the order in which parts must be removed.

- Print cartridge
  - Transfer roller
- Control-panel overlay
- Tray 1
- Tray 2 feed rollers
- Rear output bin
- Formatter cover
  - Firmware DIMM
  - Formatter assembly (2 machine screws)
- Accessory covers and the tray 2 extension door
  - Fuser
  - Tray 1 pickup roller
  - Tray 1 separation pad
  - Top cover
    - Control-panel assembly
    - Right-side cover[1]
      - Tray 2 media-size sensor
      - Tray 2 lifter-drive assembly
      - Cooling fan (right side; HP LaserJet 4300 only)[2]
      - Laser/scanner
      - Paper-pickup assembly[3]
      - Print-cartridge motor (HP LaserJet 4300 only)[4]
      - Main motor
      - DC controller assembly[5]
        - Main drive assembly[6]
      - Components listed with superscripts [1, 2, 5, 6]
        - Registration-roller assembly
    - Left-side cover[7]
      - Output delivery assembly[8]
        - Duplexing pendulum assembly
      - Main cooling fan (left side)
      - Power supply[9]
        - Paper-feed assembly
      - Tray 1 pickup assembly[10]
      - Components listed with superscripts [1, 3, 4, 5, 6, 7, 8, 9, 10]
        - Transfer assembly

Note Some components in the parts-removal tree have a superscript number listed next to the component name (for example, “Right-side cover[1]”). The superscript indicates that this component must be removed to gain access to the transfer assembly and to the registration roller assembly. Components with superscript letters are removed in numerical order.

Note: The formatter assembly and fuser are only listed once, but they must be removed to gain access to some of the other components.

Download Free Service Manual at http://printer1.blogspot.com

Printer input tray, and cabinet wheel locks

When the printer and input trays are placed on the cabinet stand, the printer and trays must be locked together to prevent them from tipping over. This is not necessary (but it is recommended) if the printer and trays are placed on a level work surface. When servicing the printer and accessories, unlatch the locking mechanism and separate the printer and its accessory components.

The cabinet stand includes lock for the wheels at its base. Make sure that the wheels are locked when the printer is in place. The wheels should be unlocked *only* when the printer is being relocated.

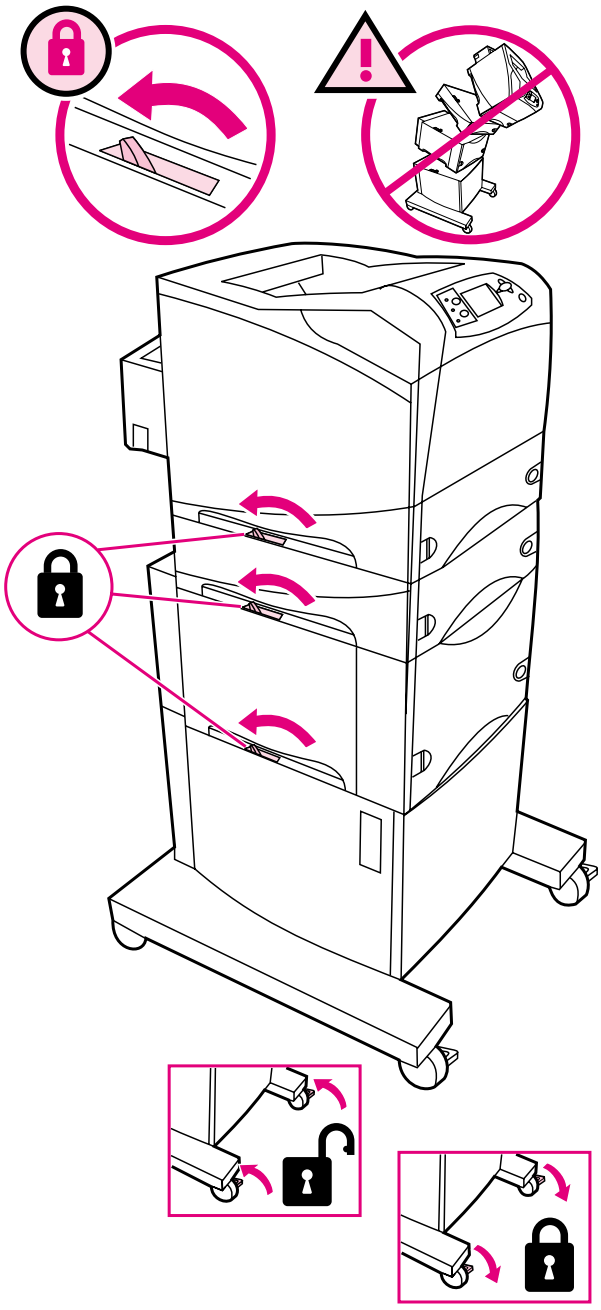

Figure 58. **Location of printer, input trays, and cabinet wheel locks**

Download Free Service Manual at http://printer1.blogspot.com

Print cartridge

1. Open the control-panel door.

Figure 59. **Print cartridge (1 of 2)**

2. Firmly grasp the print cartridge and pull it up and out of the printer.

CAUTION Do not expose the print cartridge to bright light or direct sunlight for long periods of time. This can damage the cartridge, which will result in print-quality defects. If the cartridge must be removed from the printer for an extended amount of time, cover it and keep it out of bright light or direct sunlight.

Figure 60. **Print cartridge (2 of 2)**

Download Free Service Manual at http://printer1.blogspot.com

Transfer roller

1. Open the control-panel door and tray 1.

CAUTION Do not touch the black rubber on the roller. Skin oils on the roller can cause print-quality problems. The use of disposable gloves is recommended when you remove the transfer roller.

2. Use a flat-blade screwdriver to lift the left end of the metal shaft out of place near the blue gear. Slide the transfer roller to the left to remove it.

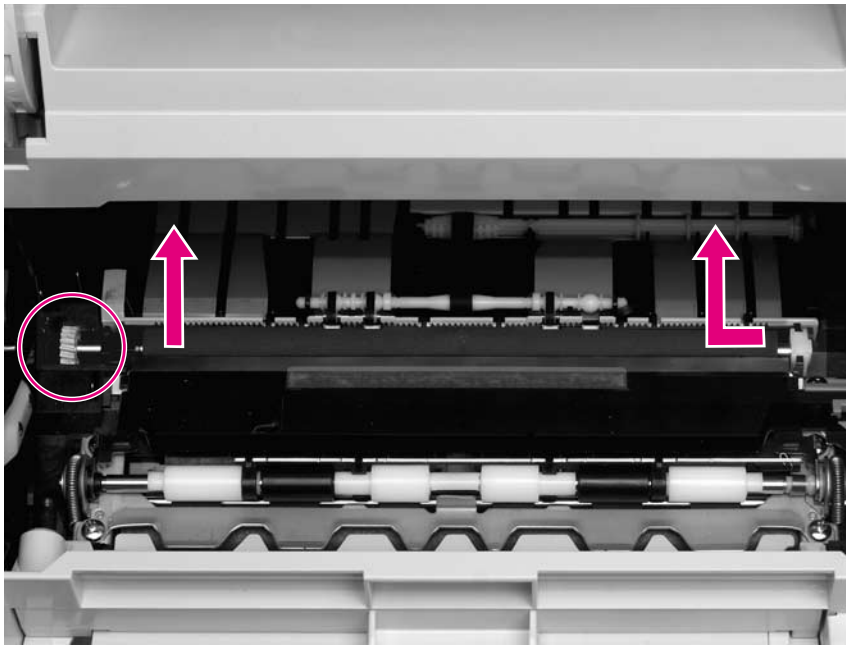

Figure 61. **Transfer roller**

Reinstall note When you install the transfer roller, make sure that the black collar on the left side is oriented correctly, with the open end face down (the solid end is face up).

Download Free Service Manual at http://printer1.blogspot.com

Tray 1 pickup roller

Note If the optional envelope feeder accessory is installed, press the release button that is on the left side and remove it. Then proceed to step 2.

1. Remove the front accessory cover (callout 1).

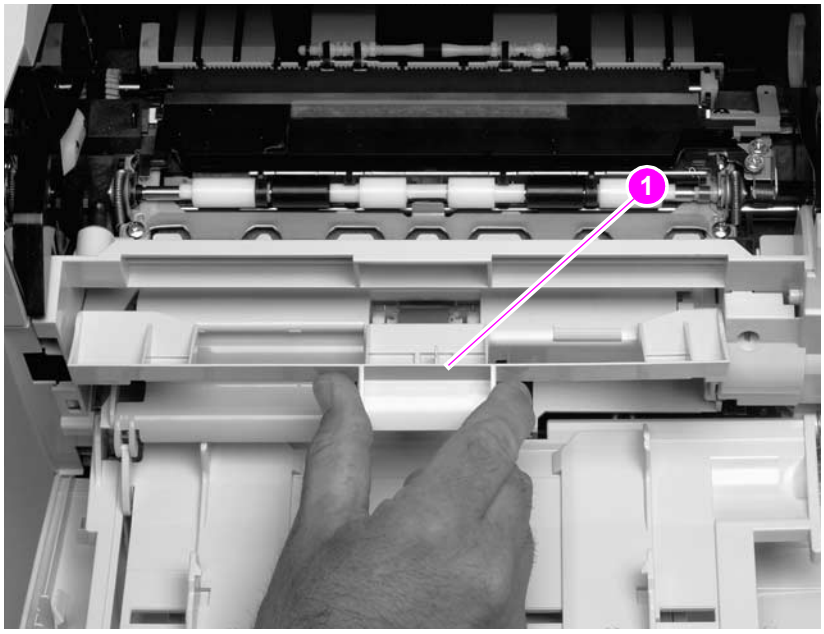

Figure 62. **Tray 1 pickup roller (1 of 2)**

2. Release the pickup roller by sliding apart the latches that are located on each side at the top of the roller. Lift the roller out of the opening.

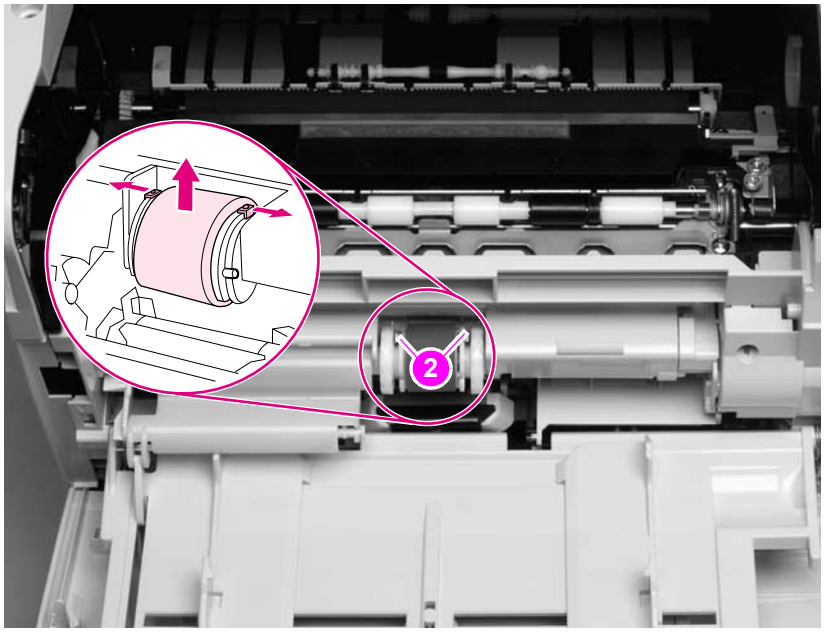

Figure 63. **Tray 1 pickup roller (2 of 2)**

Reinstall note When you install the pickup roller, place the two pivot pins in the lower mounting slots (callout 2) and rotate the roller into the printer until it snaps into place.

Download Free Service Manual at http://printer1.blogspot.com

Tray 1 separation pad

Note If the optional envelope feeder accessory is installed, press the release button that is on the left side and remove it. Then proceed to step 2.

1. Remove the front accessory cover (not shown). See "Accessory covers and the tray 2 extension door" on page 143.
2. Insert the tip of a a small flat-blade screwdriver under the tray 1 separation pad.
3. Carefully twist the screwdriver to dislodge the separation pad. Remove the tray 1 separation pad.

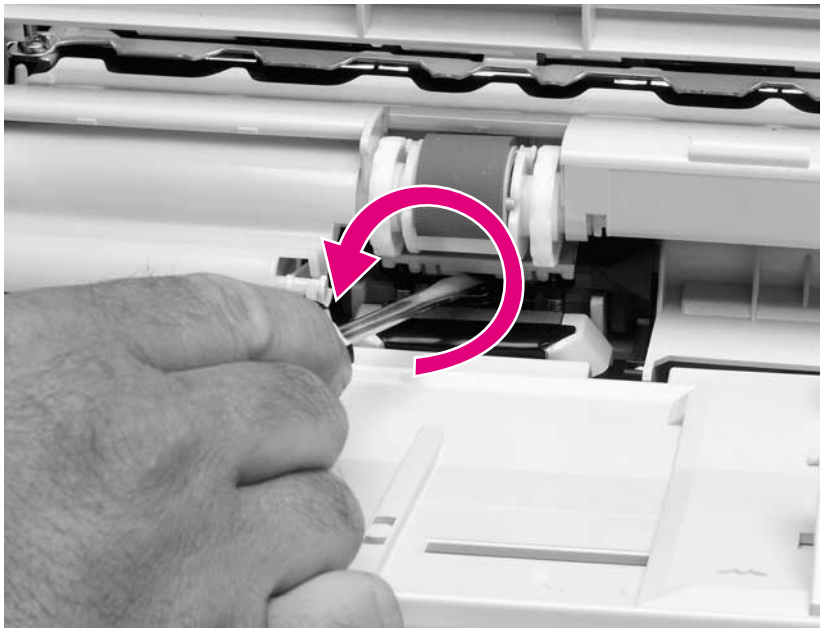

Figure 64. **Tray 1 separation pad**

Download Free Service Manual at http://printer1.blogspot.com

Tray 2 feed rollers

1. Remove tray 2 and place it on a level work surface. Locate and open the cover (arrow) that is next to the roller in tray 2.

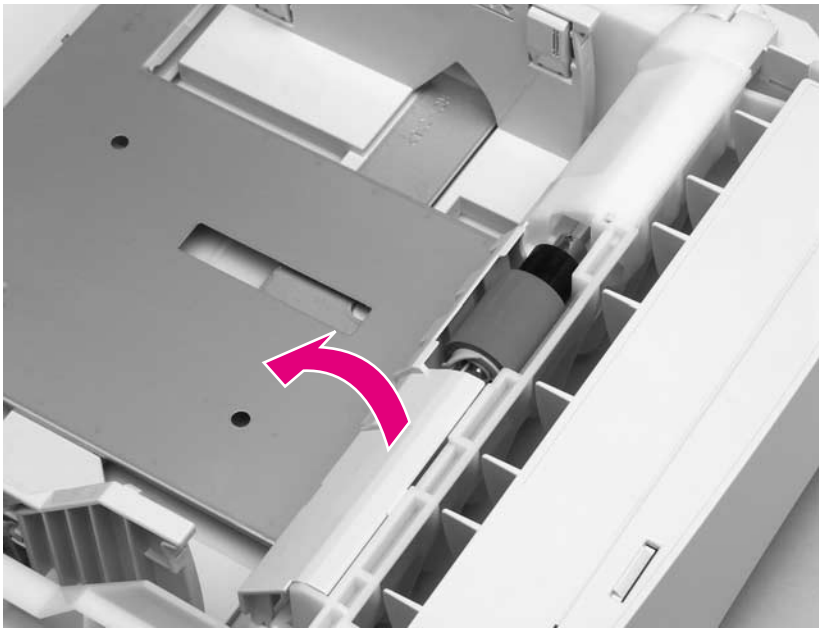

Figure 65. **Tray 2 feed rollers (1 of 4)**

2. Pinch the blue latch that is on the left side of the roller. Slide the roller off of the shaft (arrows).

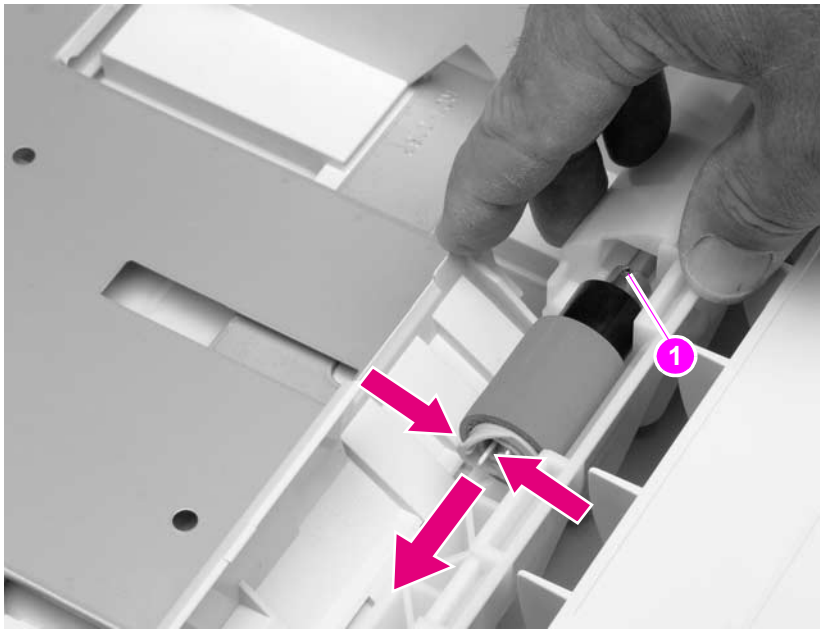

Figure 66. **Tray 2 feed rollers (2 of 4)**

CAUTION When you install the roller, make sure that it locks into place. Verify that the roller is correctly oriented, and that the round, black spacer next to the roller is correctly positioned against the locking pin on the shaft (callout 1).

Download Free Service Manual at http://printer1.blogspot.com

WARNING! Do not allow the front of the printer to extend beyond the edge of the work surface. The printer can become unbalanced and fall, which can cause damage to the printer or personal injury to the service technician.

3. Move the front of the printer to the edge of the work surface for better access to the feed roller. To find the rollers, look up into the inside of the opening that was created when you removed tray 2.

Figure 67. **Tray 2 feed rollers (3 of 4)**

4. Pinch the blue latch on the left side of the feed roller. Slide the roller off of the shaft. You might need to rotate the roller in order to pinch the latch.

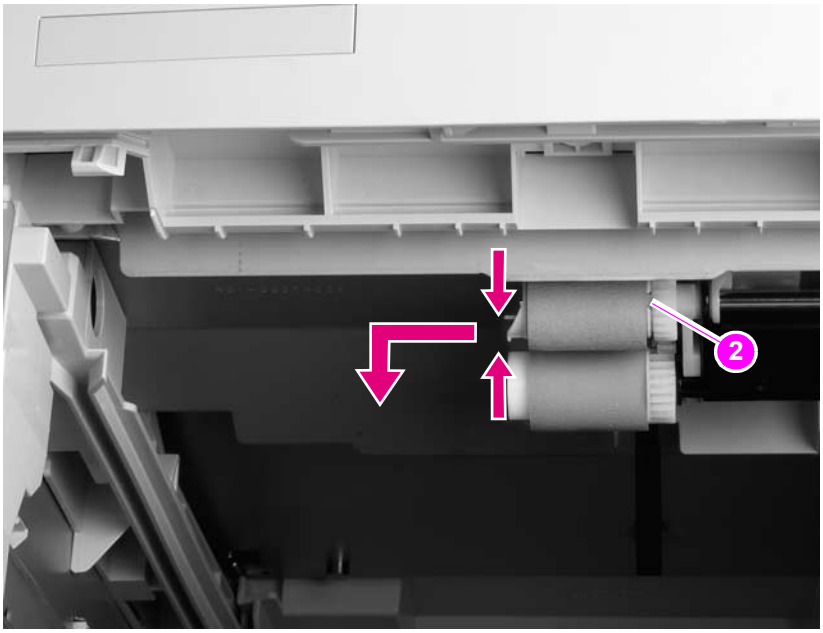

Figure 68. **Tray 2 feed rollers (4 of 4)**

5. Repeat the previous step for the remaining white pickup roller.

Reinstall note When you install a roller, make sure that it locks into place on the tabs that are on the drive gear (callout 2).

Download Free Service Manual at http://printer1.blogspot.com

Covers, tray 1, and the rear output bin

Accessory covers and the tray 2 extension door

Note Accessory covers will not be in place if any installed accessories (for example, the optional stapler/stacker) have been removed to service the printer.

1. Grasp the top accessory cover (the mounting position for the optional stapler/stacker or stacker). Rotate the cover toward the front of the printer to release it, and then lift it up to remove it.

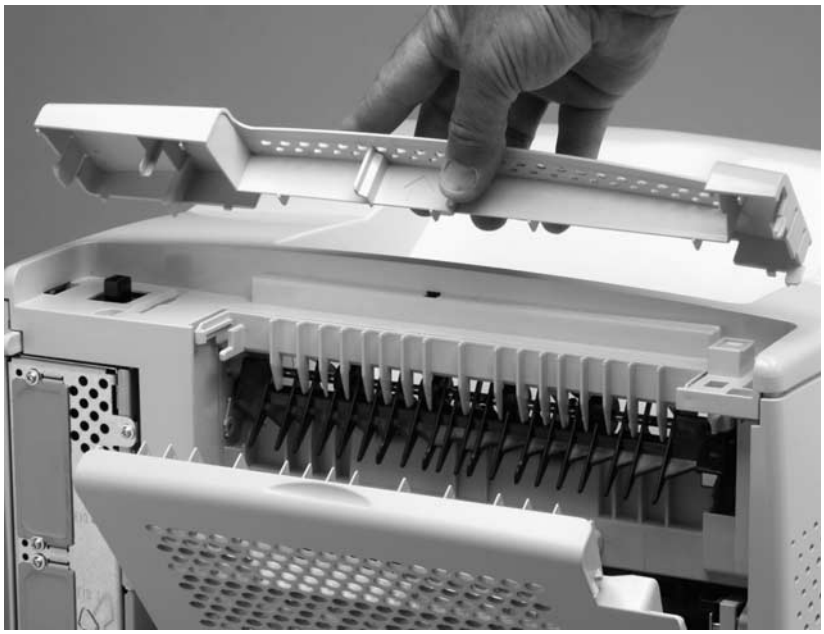

Figure 69. **Accessory covers (1 of 4)**

2. Open tray 1. Grasp the front accessory cover (the mounting position for the optional envelope feeder) and pull it straight out of the printer.

Figure 70. **Accessory covers (2 of 4)**

Download Free Service Manual at http://printer1.blogspot.com

3. Grasp the rear accessory cover (the mounting position for the optional duplexer) and pull it straight out of the printer.

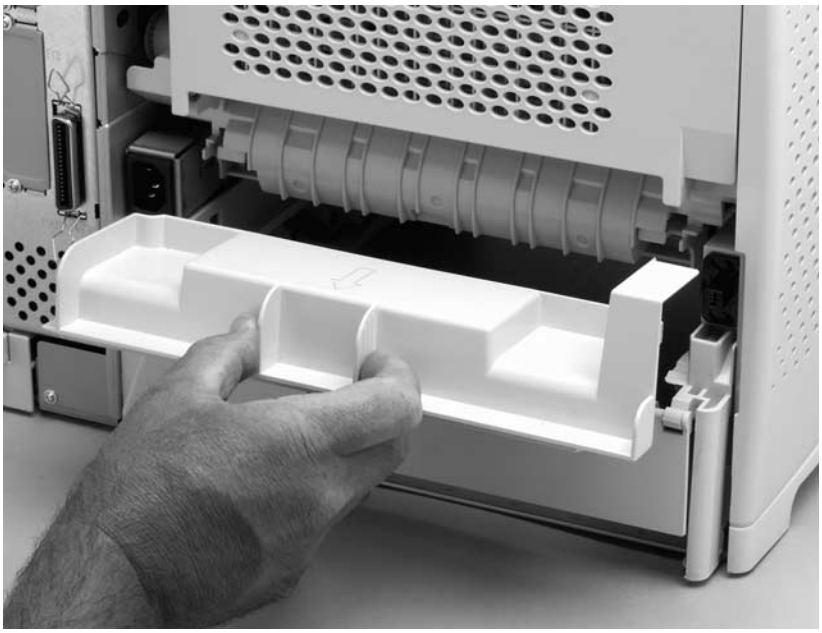

Figure 71. **Accessory covers (3 of 4)**

4. Rotate the tray 2 extension door to the horizontal position. Lift up on the right side of the door to unlock its pivot bar. Slide the left-side pivot pin out of its retainer and remove the door.

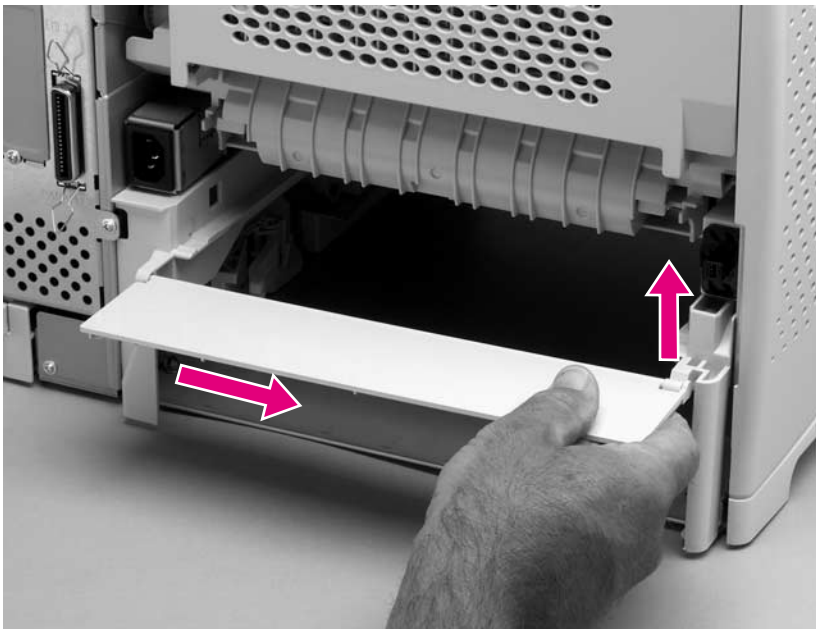

Figure 72. **Accessory covers (4 of 4)**

Download Free Service Manual at http://printer1.blogspot.com

Formatter cover

1. Grasp the formatter cover.
2. Pull the cover straight back and away from the printer.

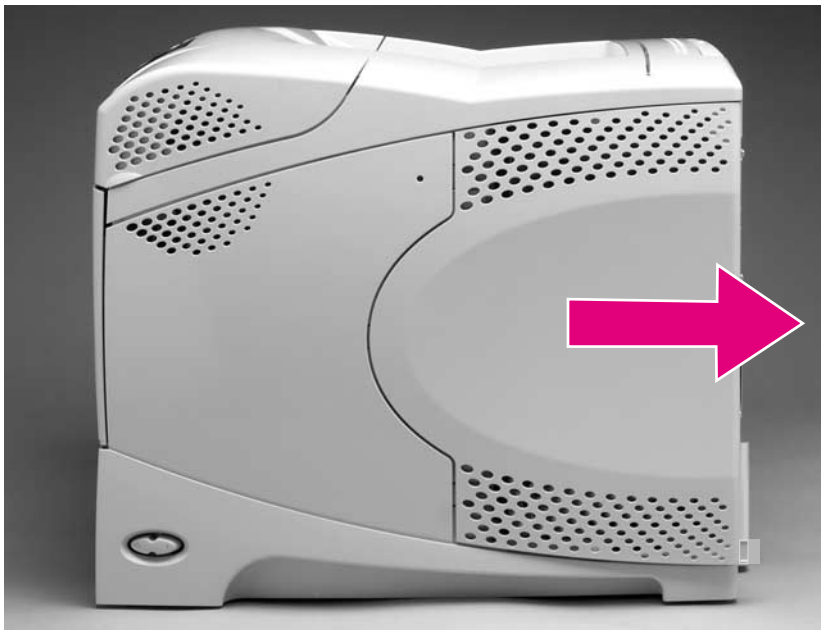

Figure 73. **Formatter cover**

Download Free Service Manual at http://printer1.blogspot.com

Top cover

Note If the optional stapler/stacker or stacker accessory is installed, lift it straight up and off of the printer to remove it. Then proceed to step 2.

1. Remove the top accessory cover. See "Accessory covers and the tray 2 extension door" on page 143.
2. Remove the two rear mounting screws (callout 1).

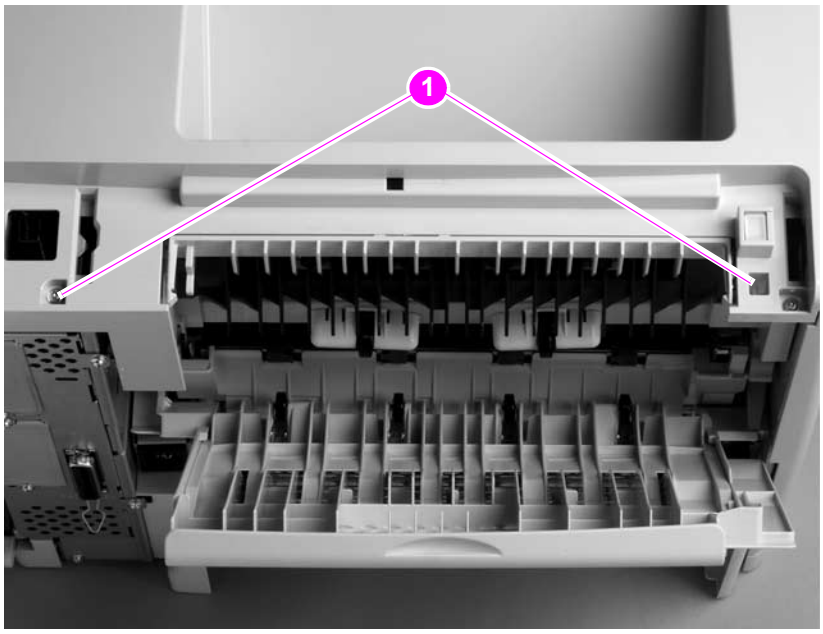

Figure 74. **Top cover (1 of 5)**

3. Open the print-cartridge door. Remove the front two mounting screws (callout 2).

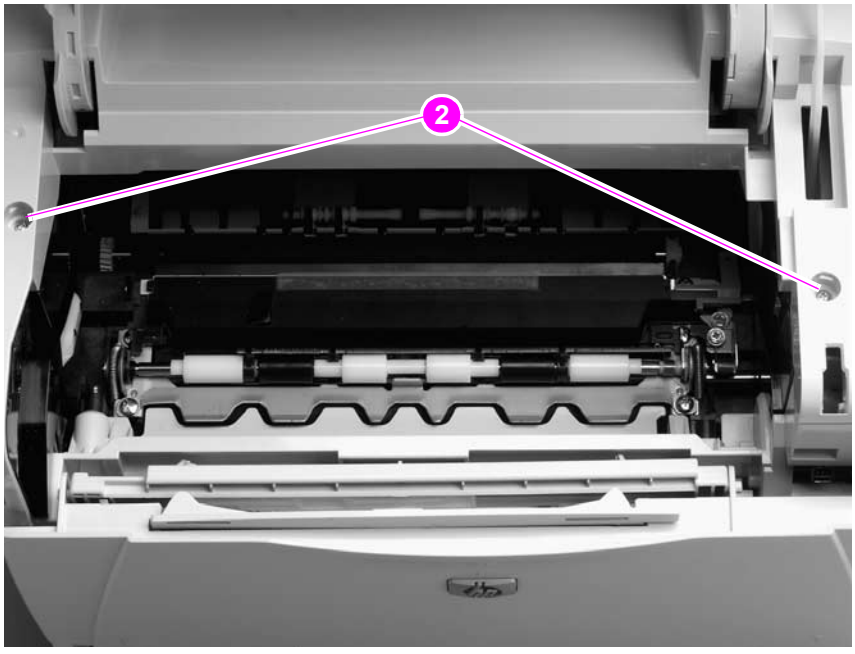

Figure 75. **Top cover (2 of 5)**

Download Free Service Manual at http://printer1.blogspot.com

4. Use needle-nose pliers to release the print-cartridge drive-arm (callout 3).

Hint Push the drive-arm back into the printer to avoid damaging it when you remove the top cover.

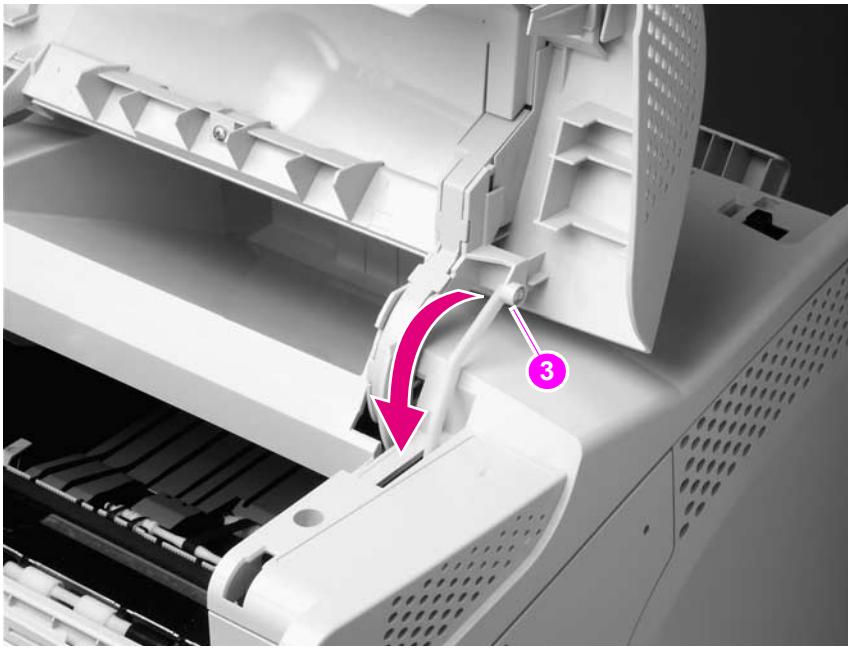

Figure 76. **Top cover (3 of 5)**

5. Open tray 1 and the rear door. Grasp the top cover and carefully rotate the left edge up and away from the printer. Do not apply stress to the control-panel wire-harness (callout 4) when rotating the top cover away from the printer.

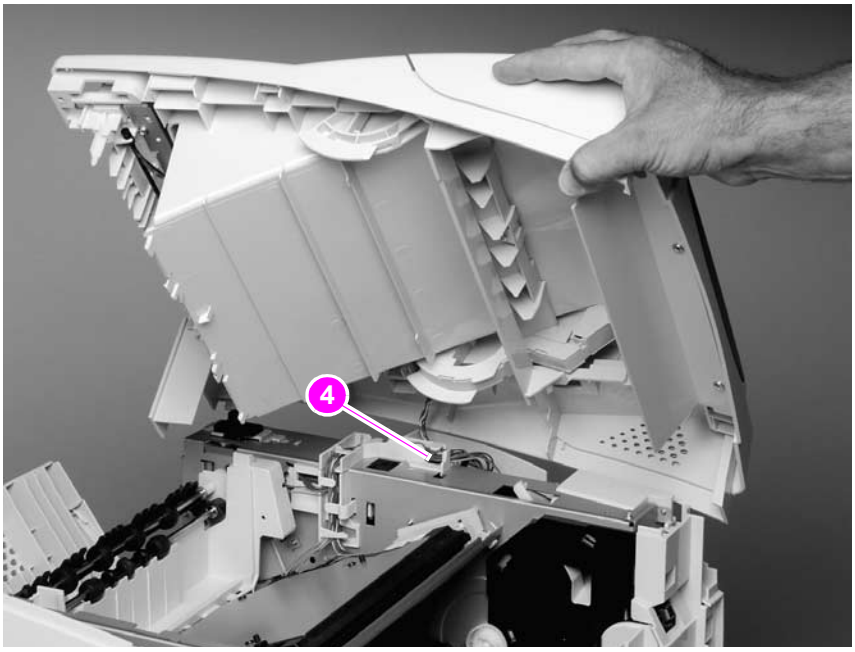

Figure 77. **Top cover (4 of 5)**

Download Free Service Manual at http://printer1.blogspot.com

6. Disconnect the control-panel wire-harness (callout 5) from the DC controller PCA. Remove the top cover.

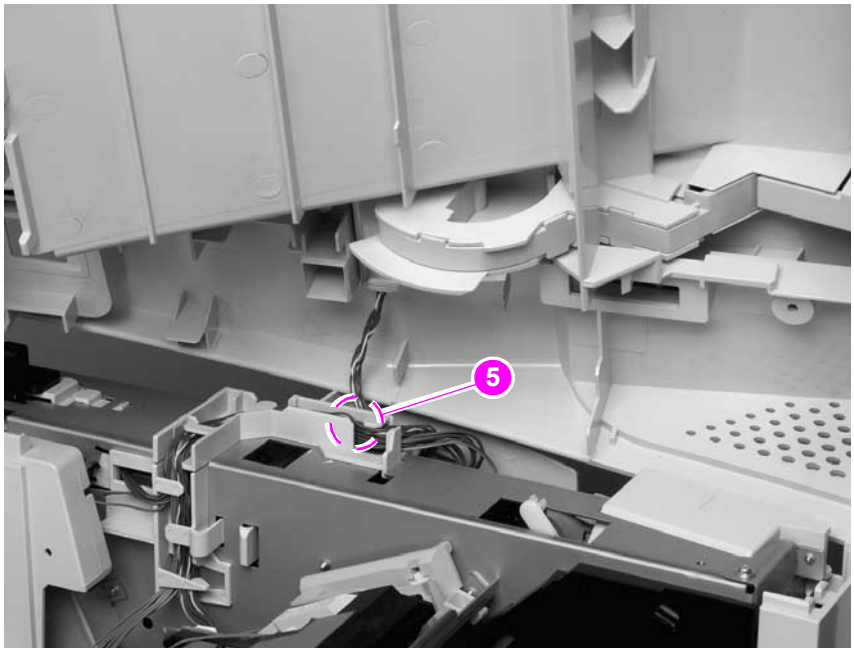

Figure 78. **Top cover (5 of 5)**

CAUTION When the top cover is re-installed, make sure that the wire-harnesses are properly routed through the cable guides. If the wire-harnesses are not properly routed, they can be damaged when the top cover is installed.

Hint The control-panel wire-harness connector can easily be disconnected when you install the top cover. If the control panel does not work after the top cover is installed, verify that the wire-harness connector is fully seated into its DC controller PCA connector.

Download Free Service Manual at http://printer1.blogspot.com

Right-side cover

1. Remove the following assemblies:
   - Formatter cover. See “Formatter cover” on page 145.
   - Top cover. See “Top cover” on page 146.
2. Release the upper right-side cover-locking tab near the formatter (callout 1).

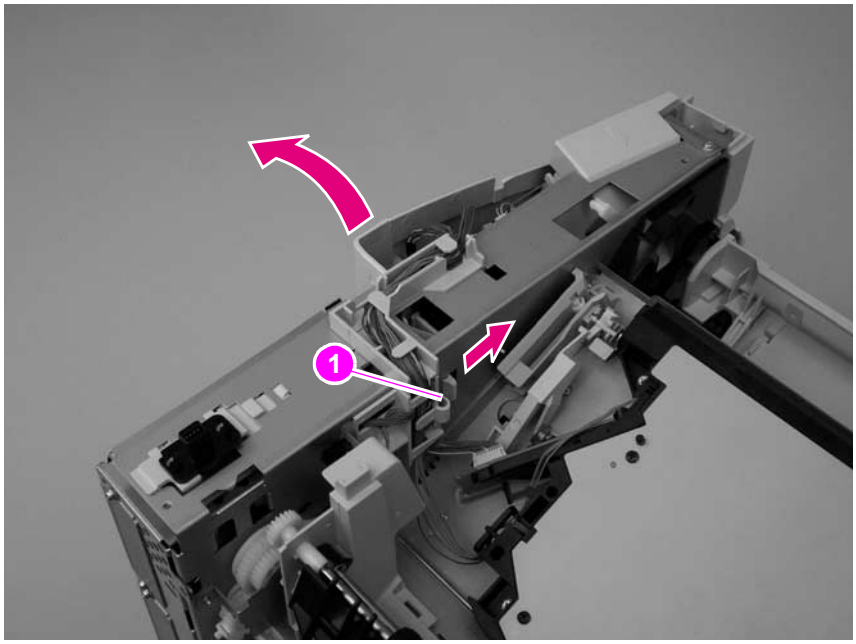

Figure 79. **Right-side cover (1 of 4)**

3. Locate the arrow that is embossed on the tray-number indicator. Use a small flat-blade screwdriver to push in on the lower cover-locking tab to release it.

Figure 80. **Right-side cover (2 of 4)**

Download Free Service Manual at http://printer1.blogspot.com

4. Locate the arrow (callout 2) that is embossed on the pickup gear cover near the optional envelope feeder power connector (not shown; open tray 1 to locate this arrow). Use a small flat-blade screwdriver to push in on the locking tab to release it

Figure 81. **Right-side cover (3 of 4)**

5. Open the formatter door and rotate the right-side cover away from the printer and lift it up to remove it.

Figure 82. **Right-side cover (4 of 4)**

Reinstall note When you install the right-side cover, verify that the power-switch arm locks onto the switch connecting rod (callout 3).

Download Free Service Manual at http://printer1.blogspot.com

Left-side cover

1. Remove the top cover. See "Top cover" on page 146.
2. Release the upper (callout 1) and front left-side cover-locking tabs.

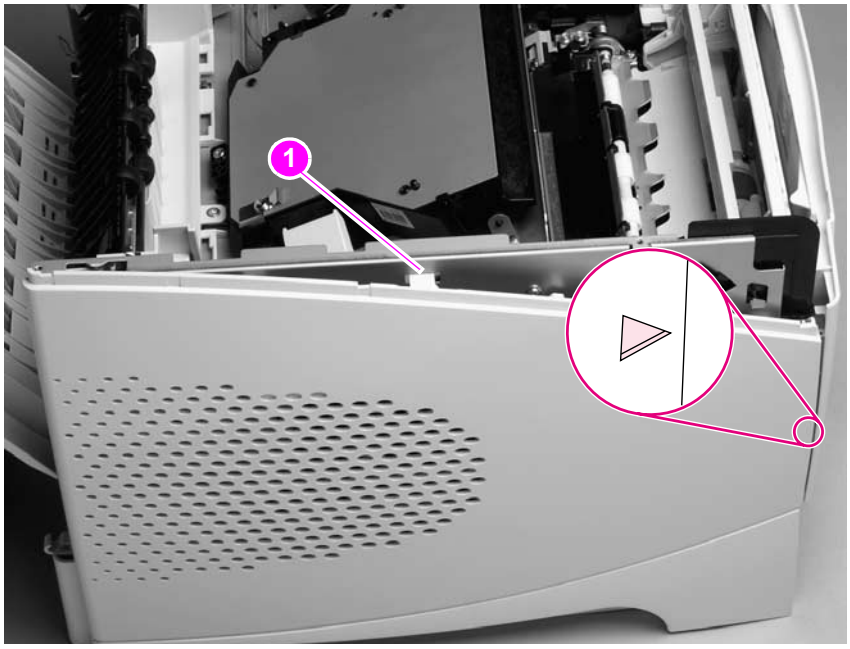

Figure 83. **Left-side cover (1 of 2)**

3. Rotate the top of the cover away from the printer and lift the cover up to remove it.

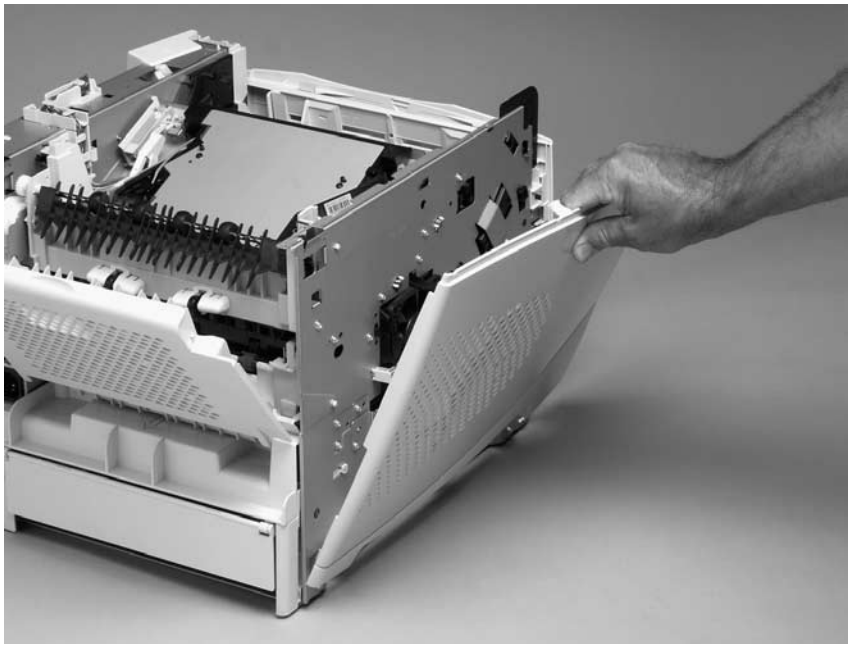

Figure 84. **Left-side cover (2 of 2)**

Download Free Service Manual at http://printer1.blogspot.com

Tray 1

1. Open tray 1. Use your fingers to gently pry the paper-guide slide-pin hinges out of the hinge slots on the tray 1 door to release the pins.

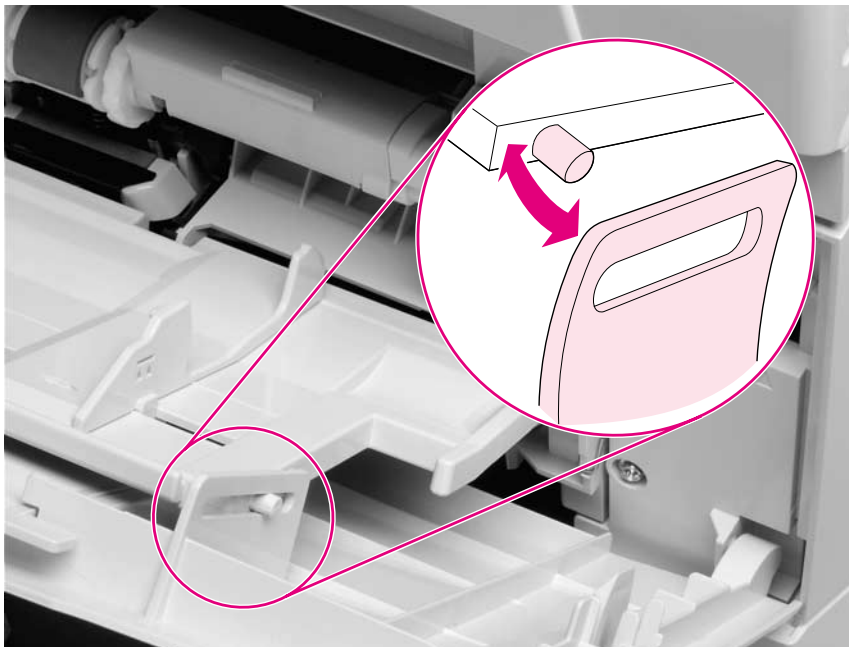

Figure 85. **Tray 1 (1 of 6)**

2. Slide the tray 1 door to the right and remove it.

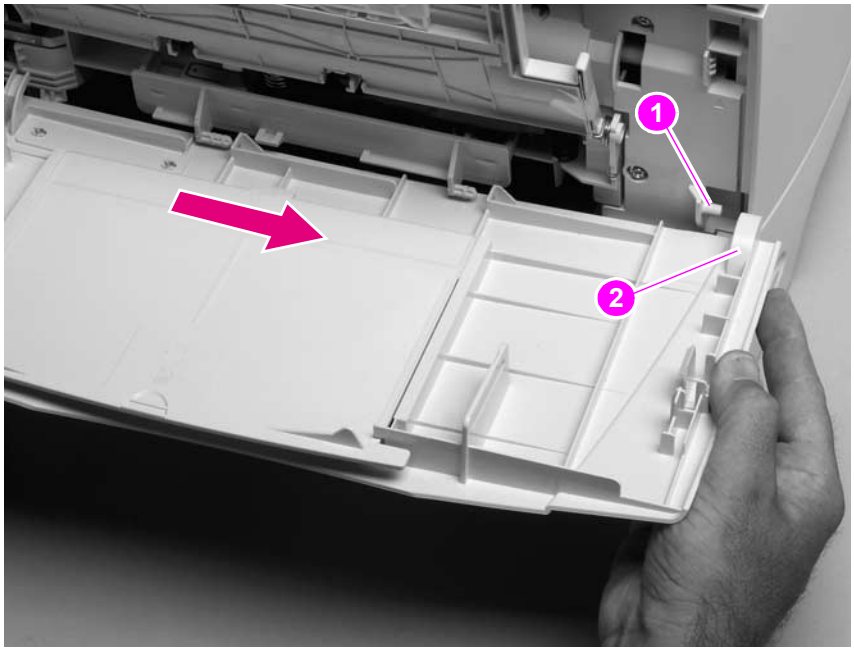

Figure 86. **Tray 1 (2 of 6)**

Reinstall note When you install the tray 1 door, the door-stop pin (callout 1) must be installed in the stop receptacle on the door (callout 2) so that the door will open and close properly.

Download Free Service Manual at http://printer1.blogspot.com

3. Firmly pull both sides of the tray 1 sensor arm cover down to release it from the shaft.

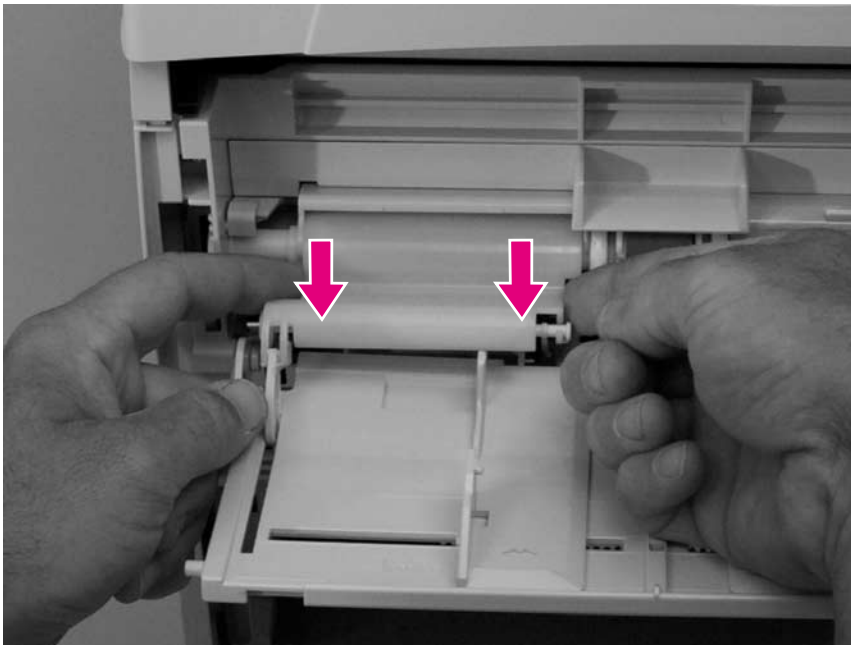

Figure 87. **Tray 1 (3 of 6)**

Reinstall note When the tray 1 sensor cover is installed, verify that the sensor arms move freely.

Note Be sure to look at how the spring (callout 3) is positioned before removing it.

4. Rotate tray 1 upward and release the return spring (callout 3) from the bottom of tray 1.

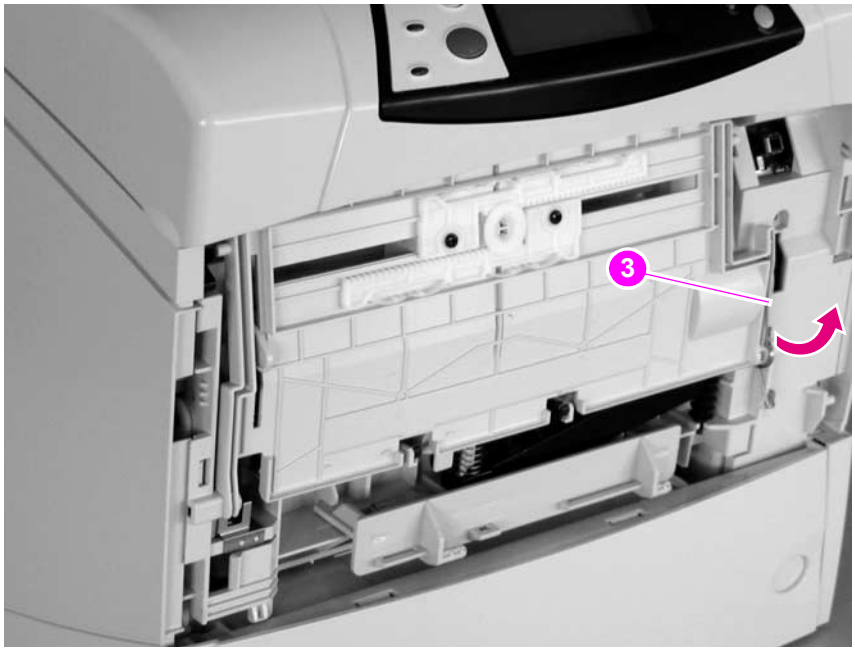

Figure 88. **Tray 1 (4 of 6)**

Download Free Service Manual at http://printer1.blogspot.com

5. Rotate the paper guide down and away from the printer to release the left paper-guide hinge.

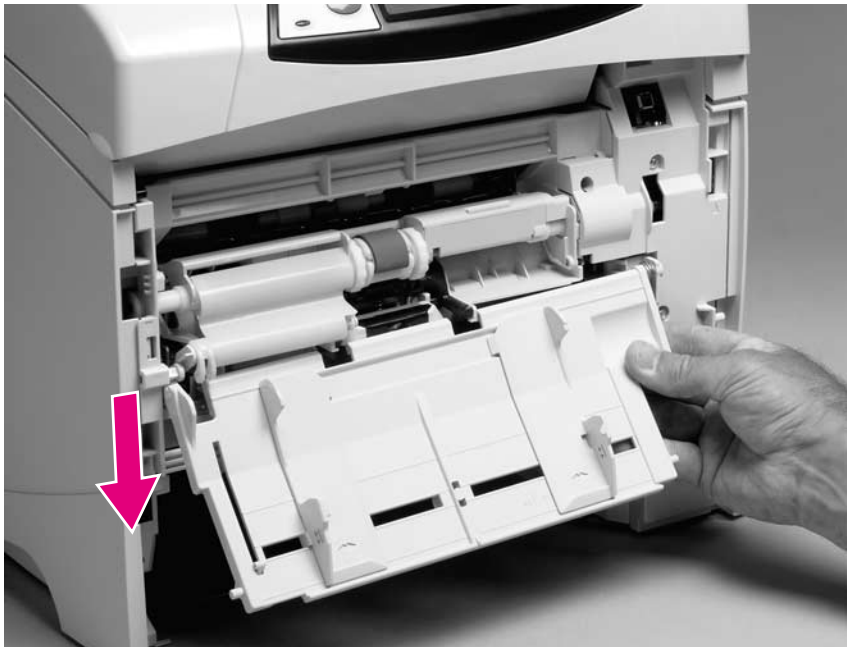

Figure 89. **Tray 1 (5 of 6)**

6. Slide the paper guide to the left to remove it.

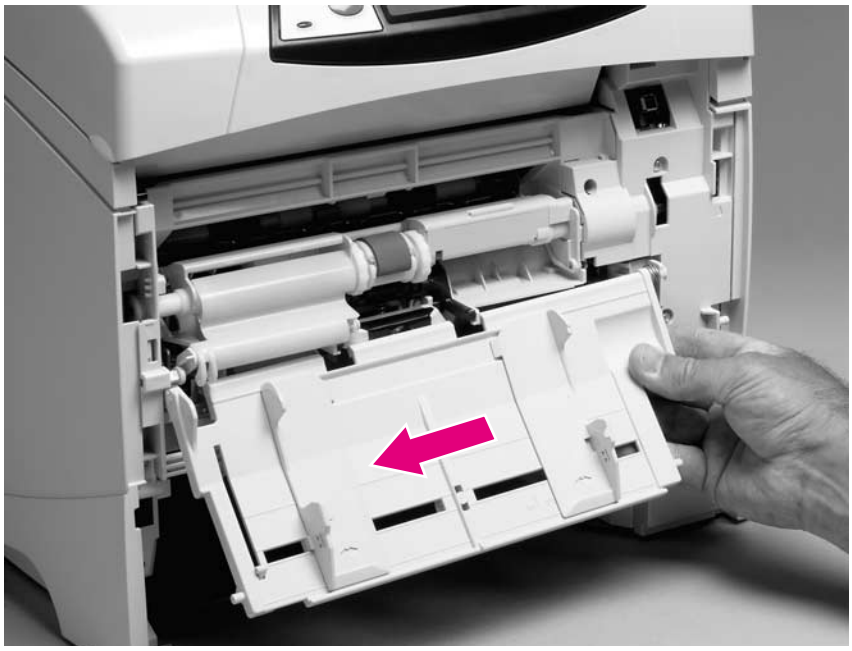

Figure 90. **Tray 1 (6 of 6)**

Hint Tape the return spring in place on tray 1 so that you will not lose it.

Reinstall note When installing the tray 1 paper guide, hook the short end of the return spring in the small notch located below the right-side hinge-pin receptacle.

Download Free Service Manual at http://printer1.blogspot.com

Rear output bin

Note If the optional duplexer accessory is installed, lift it up slightly and pull it away from the printer to remove it.

1. Open the rear output bin. Use your finger to squeeze the hinge pin (formatter side) out of its mounting hole.

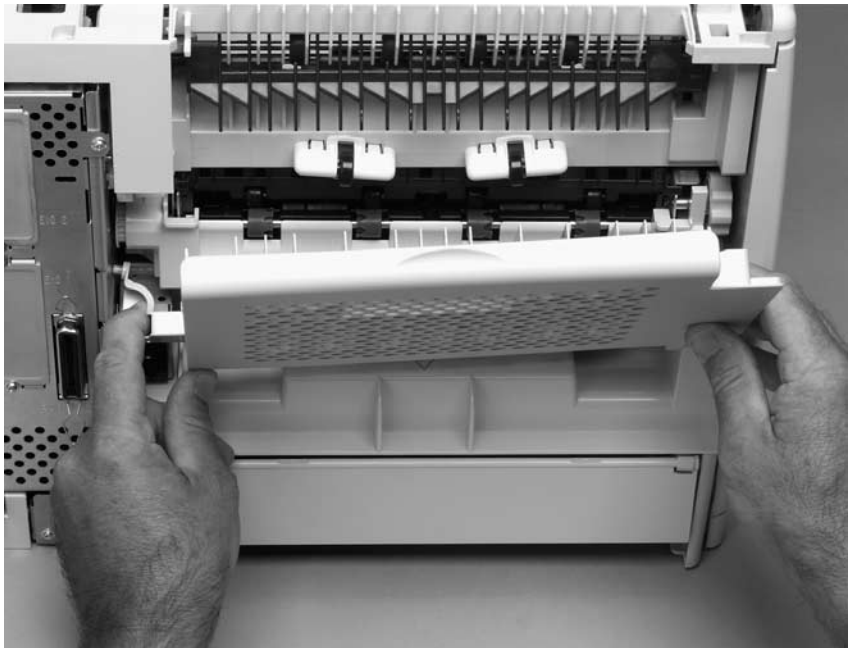

Figure 91. **Rear output bin (1 of 2)**

2. Rotate the output bin away from the printer until the right hinge pin is released, and then remove the output bin.

Figure 92. **Rear output bin (2 of 2)**

Download Free Service Manual at http://printer1.blogspot.com

Control-panel display

Control-panel overlay

1. Use a small flat-blade screwdriver to carefully pry the top of the control-panel overlay (circled; callout 1) away from the printer.
2. Remove the overlay.

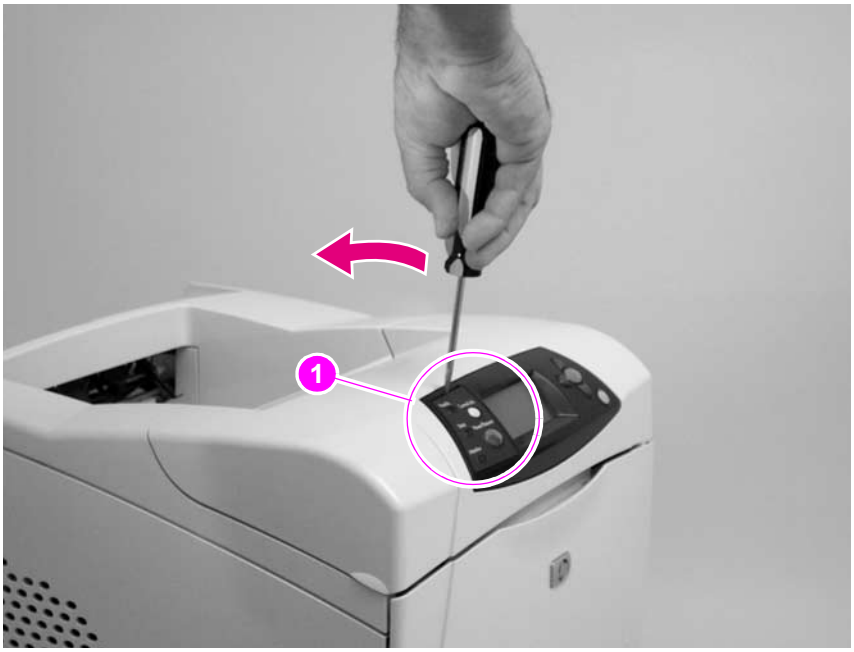

Figure 93. **Control-panel overlay**

Download Free Service Manual at http://printer1.blogspot.com

Control-panel assembly

CAUTION *Always* remove the top cover *before* attempting to remove the control panel. If you drop any of the control-panel mounting screws into the printer when you remove the control panel, they might be difficult to recover. Severe damage to the printer can result if the power is turned on when loose screws are inside the unit.

1. Remove the top cover. See "Top cover" on page 146.
2. Place the top cover upside-down on a padded work surface.
3. Remove six screws (callout 1).

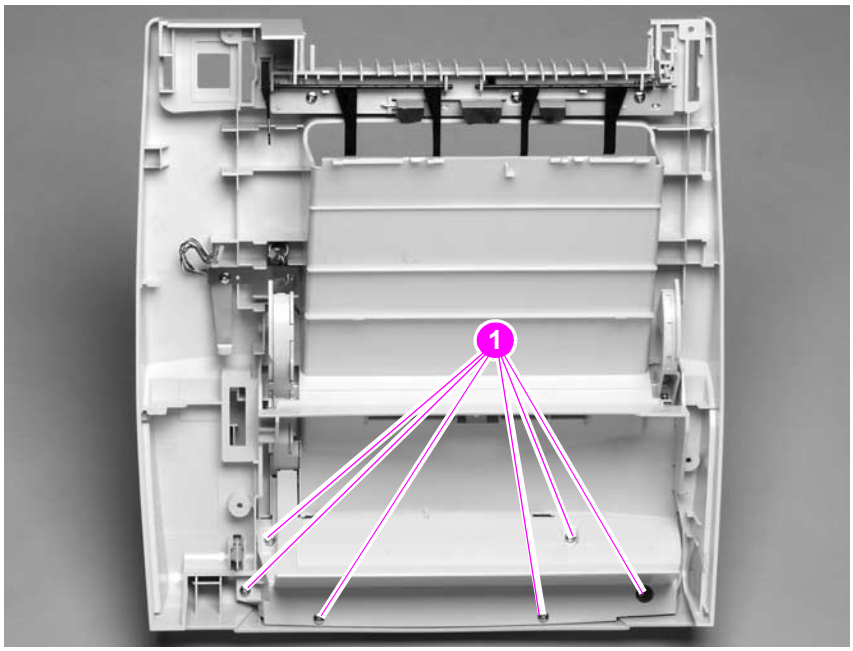

Figure 94. **Control-panel assembly (1 of 4)**

Download Free Service Manual at http://printer1.blogspot.com

4. Raise the top cover so that the print cartridge door begins to open. This allows the door-open flag (callout 2) on the print cartridge door to clear the opening (callout 3) in the top cover. Remove the control panel PCA cover.

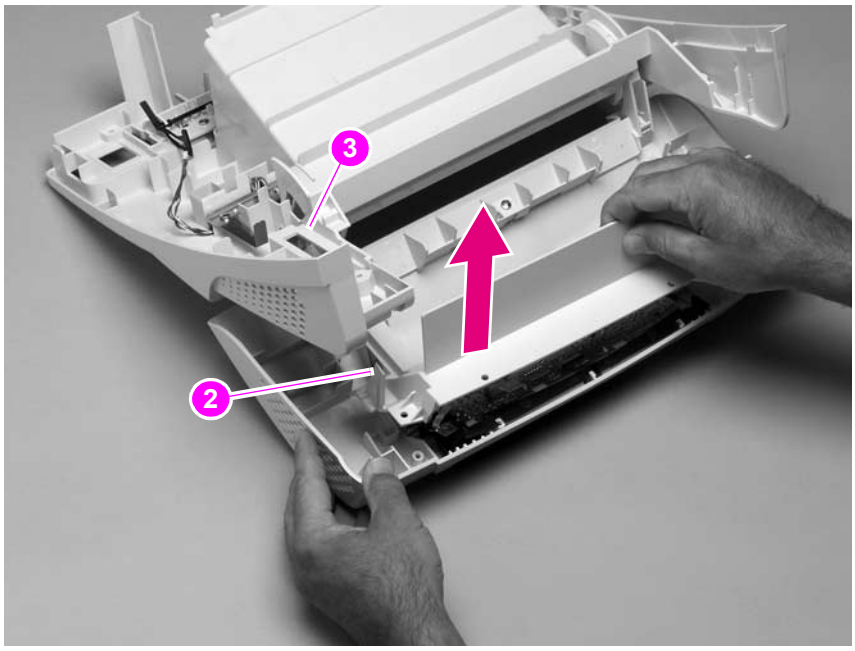

Figure 95. **Control-panel assembly (2 of 4)**

5. Remove the grounding-strip screw and clip (callout 4).

Reinstall note When you install the grounding strip (callout 5), do not forget to replace the protective clip. If the grounding strip is installed without the clip, tightening the screw will damage the grounding strip.

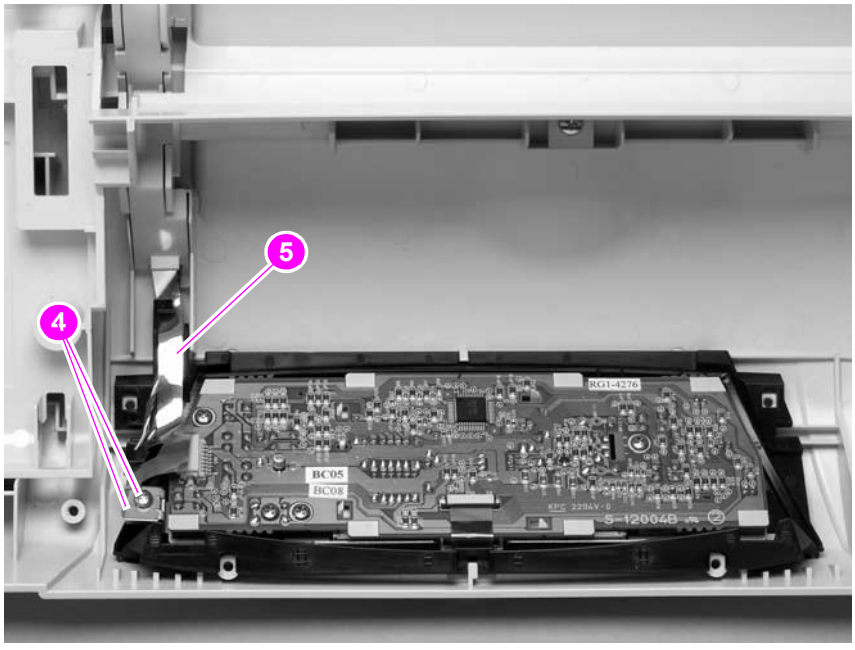

Figure 96. **Control-panel assembly (3 of 4)**

Download Free Service Manual at http://printer1.blogspot.com

CAUTION The product contains components that are sensitive to electrostatic discharge (ESD). Always perform service work at an ESD-protected workstation.

6. Use your fingers to gently pry the front of the print-cartridge door away from the control-panel display to release the retainer clip (callout 6). Unplug the control-panel wire-harness (callout 7). Remove the control panel.

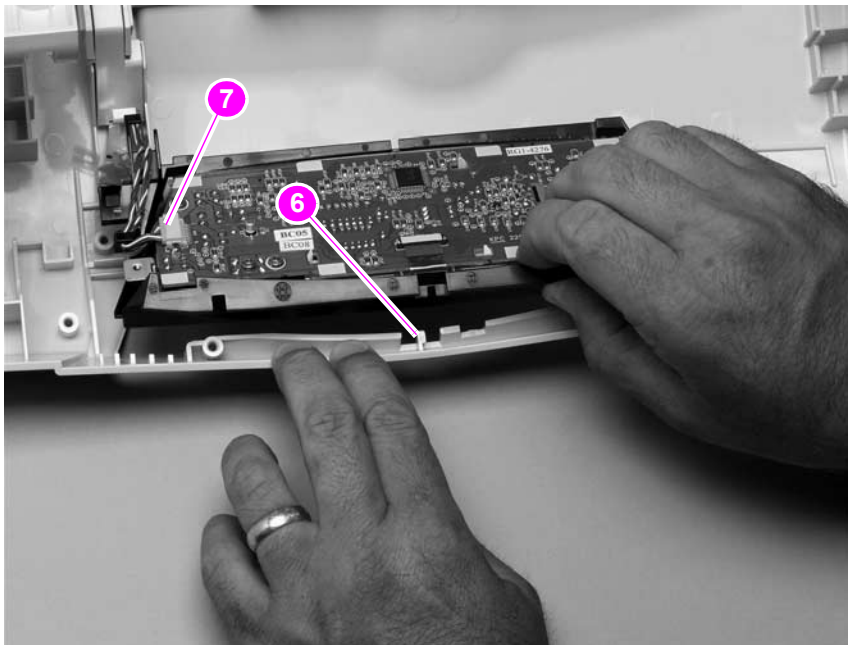

Figure 97. **Control-panel assembly (4 of 4)**

Reinstall note When the control-panel display is installed, verify that the wire-harness is placed in the cable guide under the grounding strip.

Download Free Service Manual at http://printer1.blogspot.com

Firmware DIMM

CAUTION The product contains components that are sensitive to electrostatic discharge (ESD). Always perform service work at an ESD-protected workstation. If an ESD-protected workstation is not available, discharge body static by grasping the printer chassis before touching an ESD-sensitive component. Ground the printer chassis *before* servicing the product

1. Remove the formatter cover. See "Formatter cover" on page 145.

Hint If possible, print a menu map and a configuration page. See "Menu map" on page 240 and "Configuration page" on page 241. Use the information on the these pages to restore any user-set printer configuration options after you install the replacement DIMMs.

2. Open the formatter door.
3. Push the DIMM locking arms away from the DIMM to release it. Remove the DIMM.

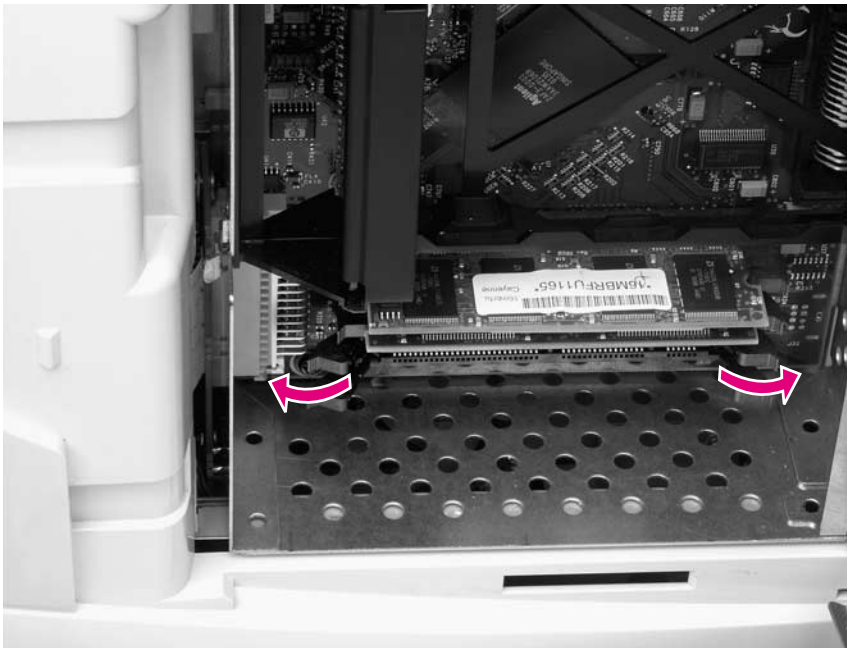

Figure 98. **Firmware DIMM**

Reinstall note The firmware DIMM *must* be installed in slot 1 (formatter PCA location J1; topmost slot).

If you are installing additional DIMMs, the second DIMM must be installed in slot 2 (formatter location J2; second slot down from the top). If another DIMM is installed, the third DIMM must be installed in slot 3 (formatter location J3; third slot down from the top). If another DIMM is installed, the fourth DIMM must be installed in slot 4 (formatter location J4; bottom slot). The printer will not recognize DIMMs if they are not installed in the correct order.

Download Free Service Manual at http://printer1.blogspot.com

Formatter assembly

Hint If possible, print a menu map and a configuration page. See"Menu map" on page 240 and "Configuration page" on page 241. Use the information on the these pages to restore any user-set product configuration options after you install a replacement formatter.

1. Remove the formatter cover. See "Formatter cover" on page 145.
2. Remove two screws (callout 1).
3. Slide the formatter assembly toward the rear of the printer to release it. Remove the formatter assembly.

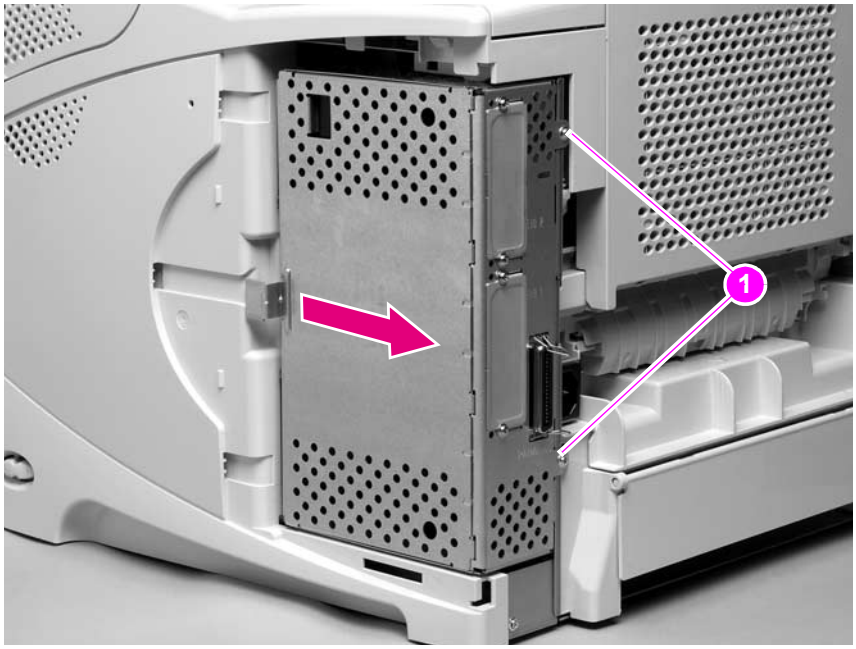

Figure 99. **Formatter assembly**

Reinstall notel If you install a *replacement* formatter perform a NVRAM initialization. See "NVRAM initialization" on page 251. Then use the control-panel display to access the service menu and enter the total page count, the maintenance count, the service ID, the cold reset paper size, and the serial number. See "Service menu (service PIN codes)" on page 249. Finally, reset the printer's display language to the customer's choice. See "Setting the control-panel display language" on page 38.

Download Free Service Manual at http://printer1.blogspot.com

Fuser

WARNING! The fuser is very hot. After turning the printer power off, allow the fuser to cool for at least 30 minutes before removing it.

1. Remove the rear output bin. See "Rear output bin" on page 155.
2. Squeeze the blue fuser release tabs (callout 1).

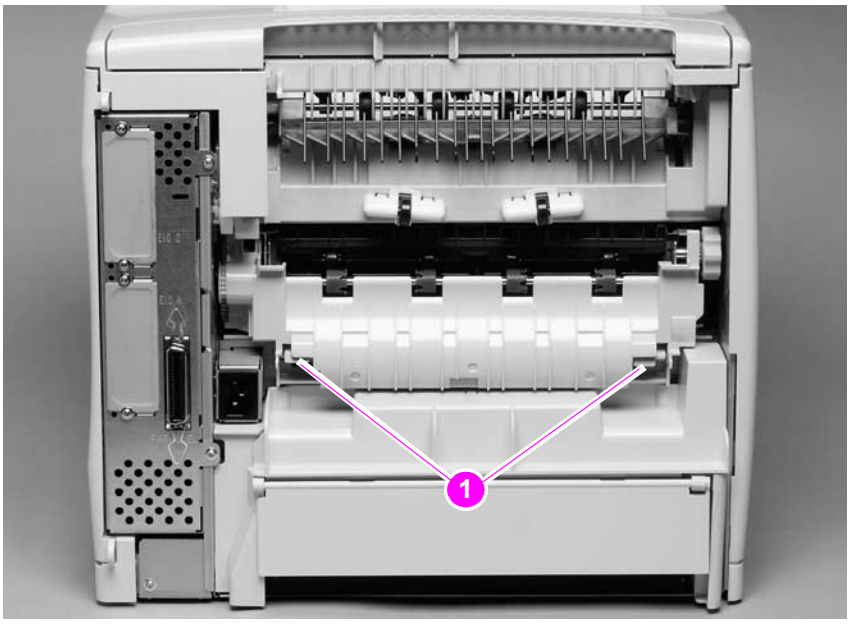

Figure 100. **Fuser (1 of 2)**

3. Pull the fuser straight back and out of the printer.

CAUTION Do not drop or jar the fuser. It can easily be damaged if it is mishandled.

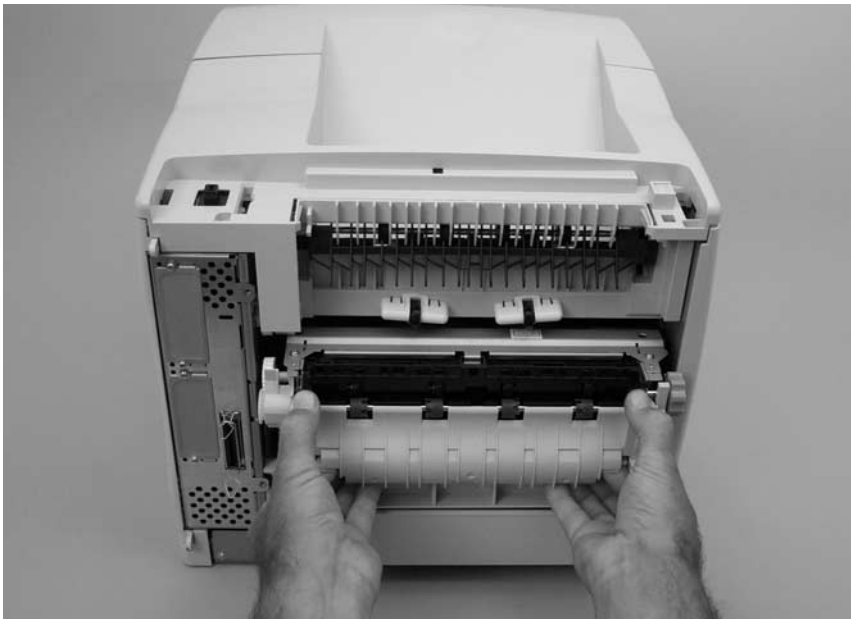

Figure 101. **Fuser (2 of 2)**

Hint When you replace the fuser, make sure that it is fully seated into the printer. You should hear both sides snap into place.

Download Free Service Manual at http://printer1.blogspot.com

Output delivery assembly

1. Remove the following assemblies:
   - Top cover. See "Top cover" on page 146.
   - Rear output bin. See "Rear output bin" on page 155.

2. Release the locking pin on the shaft lock and rotate the lock toward the rear of the printer until the inner retaining tab (gear side) aligns with the hole in the output delivery assembly frame. Slide the shaft lock to the right and remove it to release the gear shaft from the output delivery assembly.

Hint Snap the shaft lock back into place on the assembly so that you will not lose it. Remove the shaft lock when you reinstall the output delivery assembly. When the output delivery assembly is installed, verify that the locking pin on the shaft lock is fully seated in the hole on the output delivery assembly.

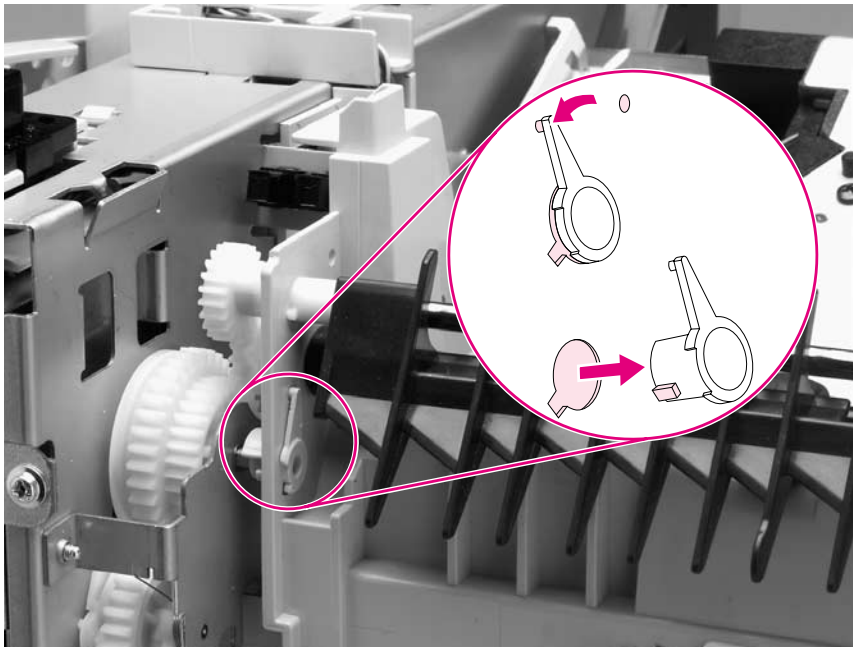

Figure 102. **Output delivery assembly (rear view, formatter side; 1 of 2)**

Download Free Service Manual at http://printer1.blogspot.com

CAUTION The rear face-down output-bin-sensor (callout 1) wire is routed through a notch (callout 2) on the output delivery system at the gear end of the assembly. When you remove the assembly, make sure that this wire-harness is carefully removed from the notch and is not damaged.

3. Lift up the gear end of the assembly slightly and move the assembly toward the formatter assembly to remove it.

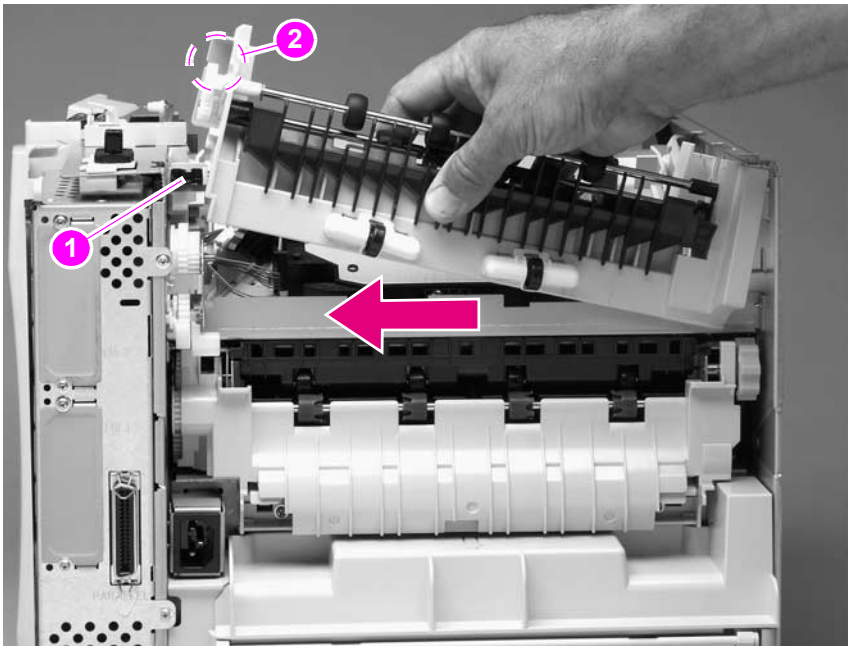

Figure 103. **Output delivery assembly (2 of 2)**

Download Free Service Manual at http://printer1.blogspot.com

Duplexing pendulum assembly

Note The duplexing pendulum assembly is part of the paper-path switching mechanism when the optional duplexer accessory is installed. It also drives the output delivery assembly.

1. Remove the following assemblies:
   - Top cover. See "Top cover" on page 146.
   - Rear output bin. See "Rear output bin" on page 155.
   - Formatter assembly. See "Formatter assembly" on page 161.
   - Output delivery assembly. See "Output delivery assembly" on page 163.
2. Remove two screws (callout 1).

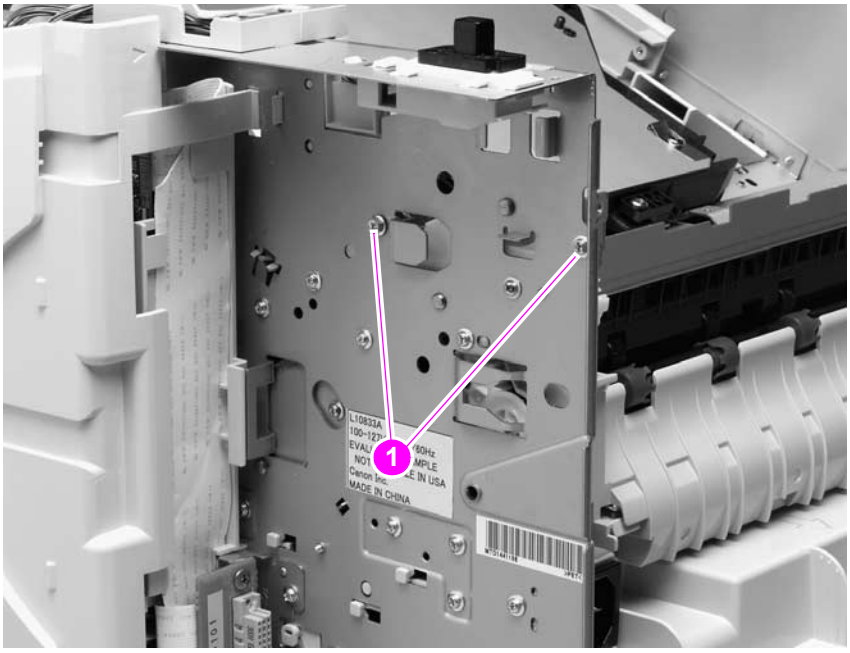

Figure 104. **Duplexing pendulum assembly (1 o 2)**

Download Free Service Manual at http://printer1.blogspot.com

CAUTION The gears in this assembly are not captive when the assembly is removed. They can easily slide off of the shafts. Handle the assembly carefully and place it gear-side up on your workstation to prevent the gears from coming off of the shafts.

3. Pull the duplexing pendulum assembly toward the laser/scanner until the upper gear-drive shaft clears the hole in the chassis, and then remove the assembly.

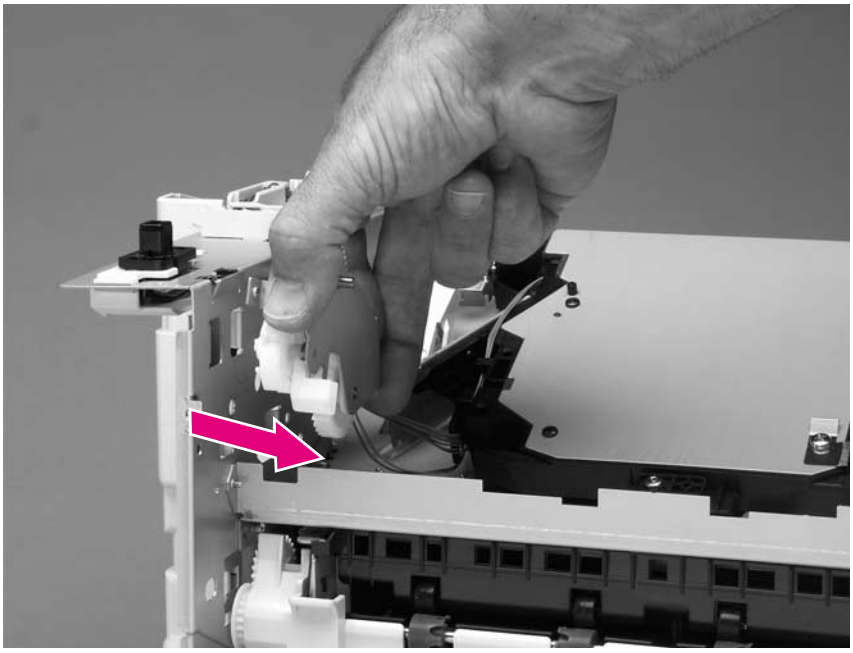

Figure 105. **Duplexing pendulum assembly (2 of 2)**

Download Free Service Manual at http://printer1.blogspot.com

Tray 2 media-size sensor

1. Remove the following assemblies:
   - Top and right-side covers. See"Top cover" on page 146 and "Right-side cover" on page 149.
   - Formatter assembly. See "Formatter assembly" on page 161.
2. Unplug the sensor connector (callout 1). Remove two screws (callout 2).

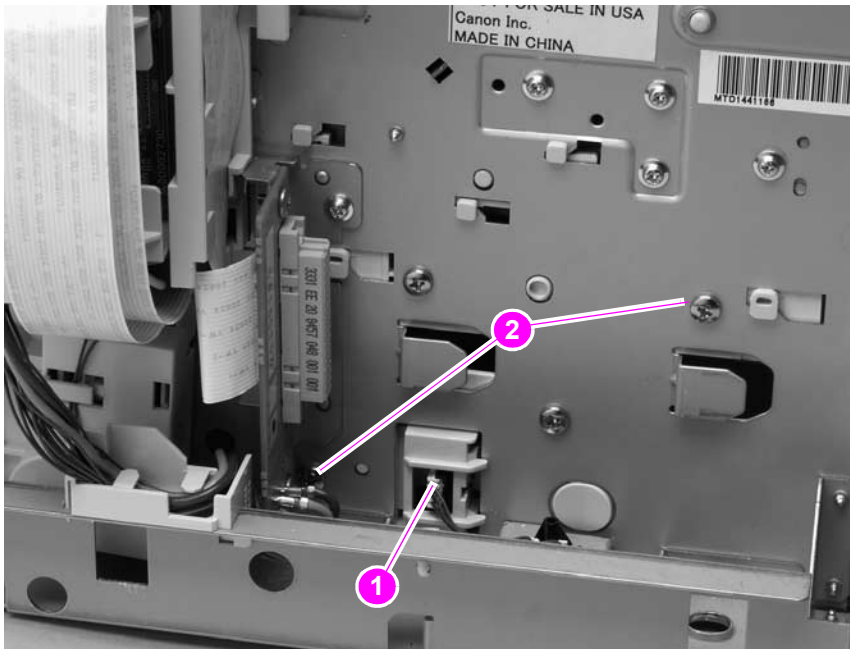

Figure 106. **Tray 2 media-size sensor (1 of 2)**

3. Depress the locking tab (callout 3), and slide the sensor toward the front of the printer to release it. Remove the sensor.

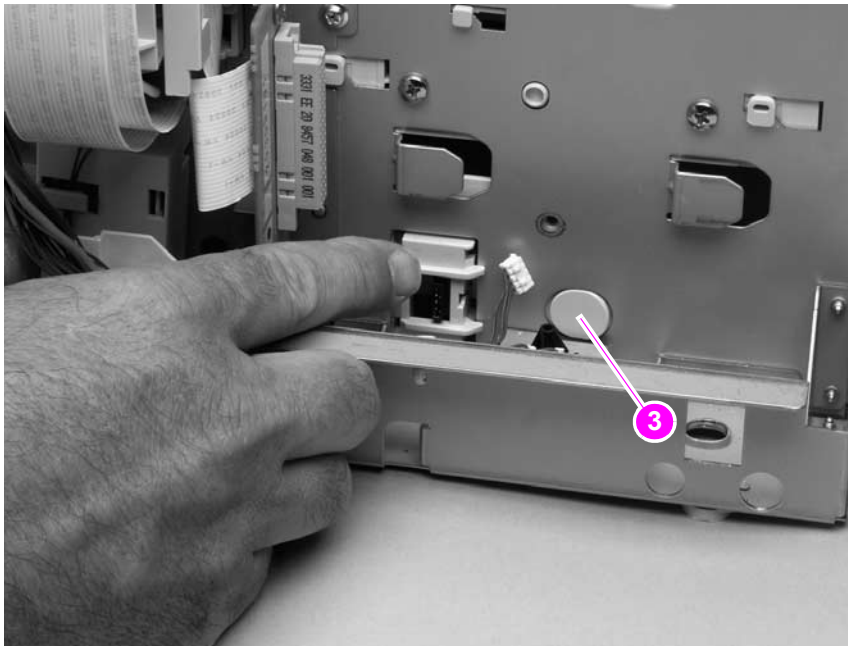

Figure 107. **Tray 2 media-size sensor (2 of 2)**

Download Free Service Manual at http://printer1.blogspot.com

Main cooling fan (left side)

1. Remove the following assemblies:
   - Top cover. See "Top cover" on page 146.
   - Left-side cover. See "Left-side cover" on page 151.
2. Remove two screws (callout 1). Remove the power-supply shield (callout 2).

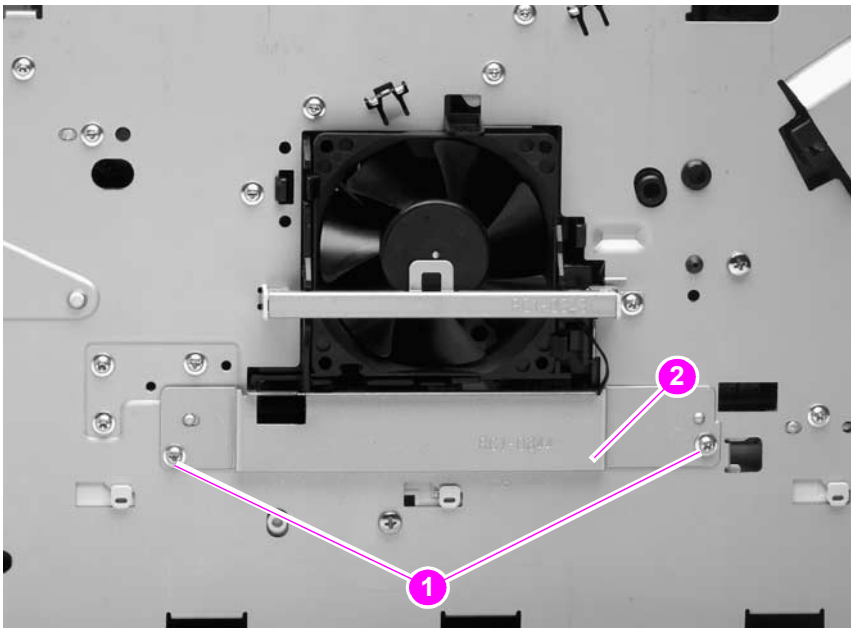

Figure 108. **Main cooling fan (1 of 4)**

3. Unplug the fan connector (callout 3) and thermistor sensor connector (callout 4) from the power supply.

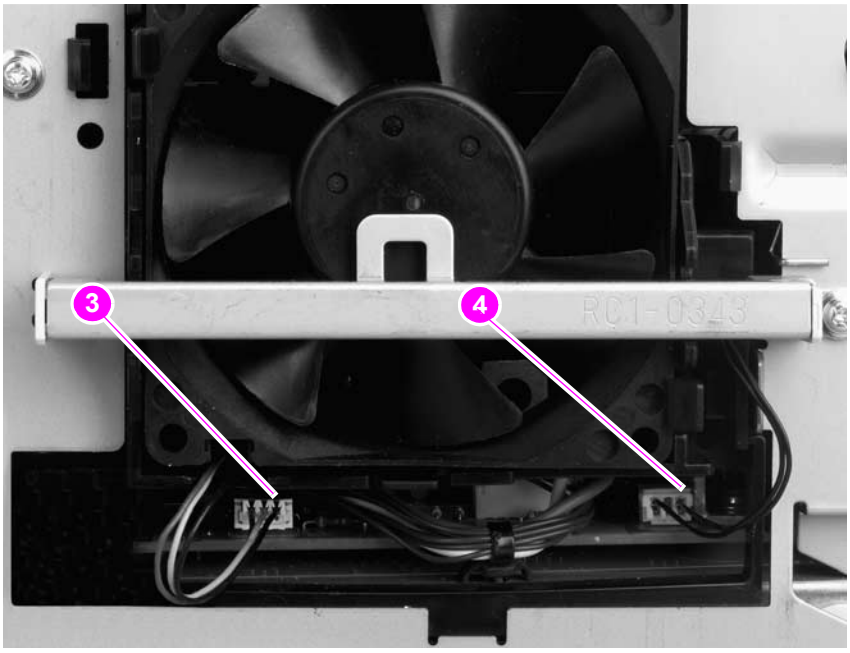

Figure 109. **Main cooling fan (2 of 4)**

Download Free Service Manual at http://printer1.blogspot.com

4. Remove one screw (callout 5). Slide the thermistor sensor bar (callout 6) to the right to release it. Remove the thermistor sensor bar.

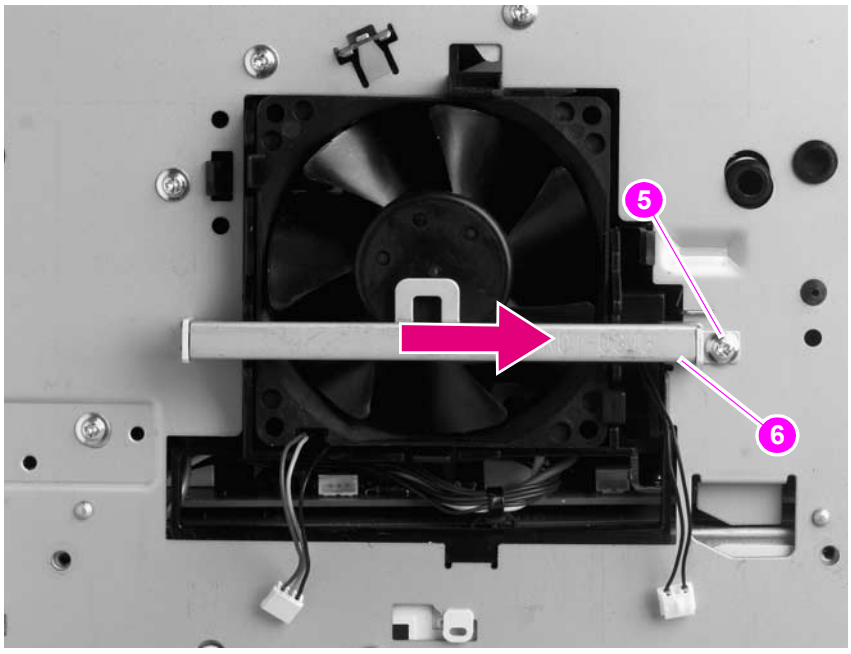

Figure 110. **Main cooling fan (3 of 4)**

5. Release the two fan-locking tabs (callout 7). Slide the fan out of its mounting bracket.

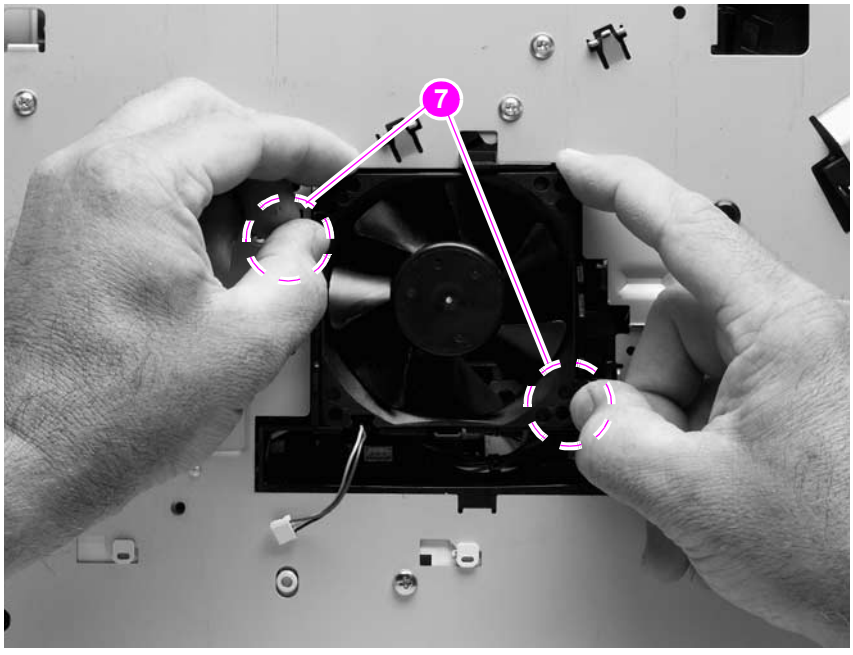

Figure 111. **Main cooling fan (4 of 4)**

Reinstall note When you install the fan, the air *must* flow into the printer. Verify that the airflow arrows that are embossed on the fan body point *into* the printer.

CAUTION When you install the fan, do not apply too much pressure to the wire-harness connectors when they are connected to the power supply. Too much pressure might snap off the soldered connectors on the power supply.

Download Free Service Manual at http://printer1.blogspot.com

Cooling fan (right side; HP LaserJet 4300 series printer only)

Note This fan is not installed in the HP LaserJet 4200 series printer.

1. Remove the following assemblies:
   - Top cover. See "Top cover" on page 146.
   - Right-side cover. See "Right-side cover" on page 149.
2. Gently pry back the two retaining tabs (callout 1) and slip the anti-static bar (callout 2) bar off of them.

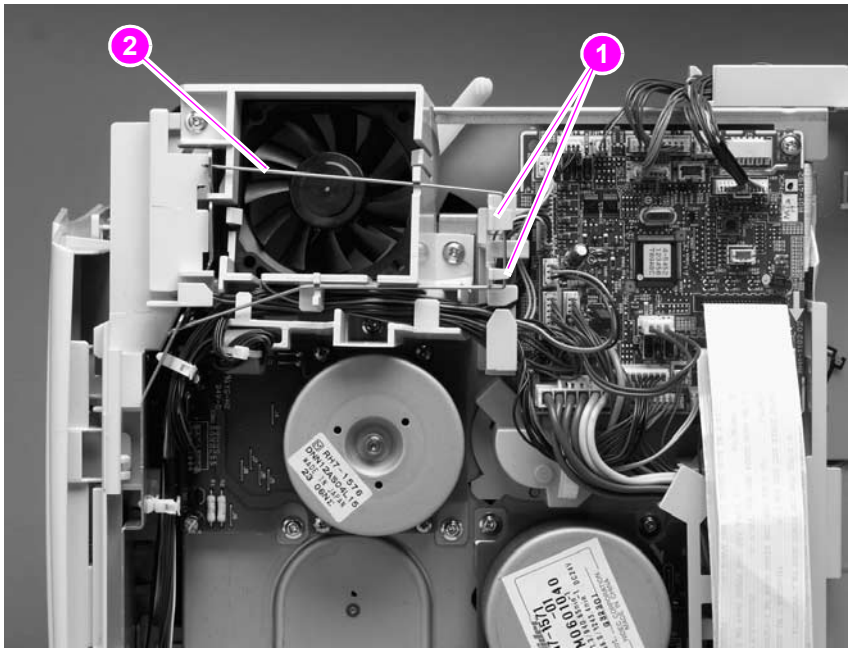

Figure 112. **Cooling fan (HP LaserJet 4300 series only; 1 of 5)**

3. Rotate the anti-static bar away from the printer to release it. Remove the anti-static bar.

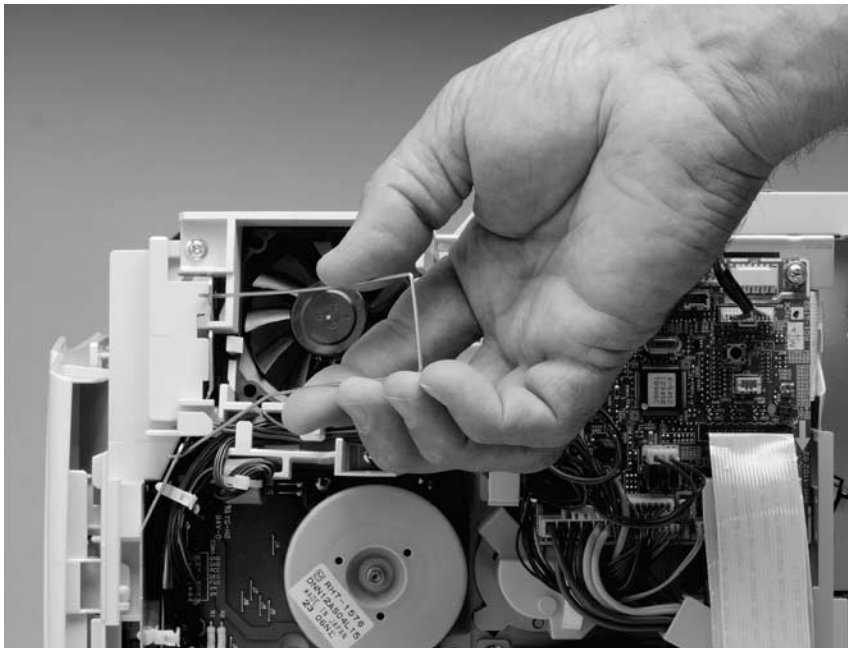

Figure 113. **Cooling fan (HP LaserJet 4300 series only; 2 of 5)**

Download Free Service Manual at http://printer1.blogspot.com

4. Unplug the fan connector from the DC controller PCA (location J78; callout 3) and unweave it from the harness guide (callout 4).

Hint It might be necessary to unplug various connectors or release some wire-harness retainer clips to provide enough slack in the wire-harnesses to unweave them easily from the harness guide.

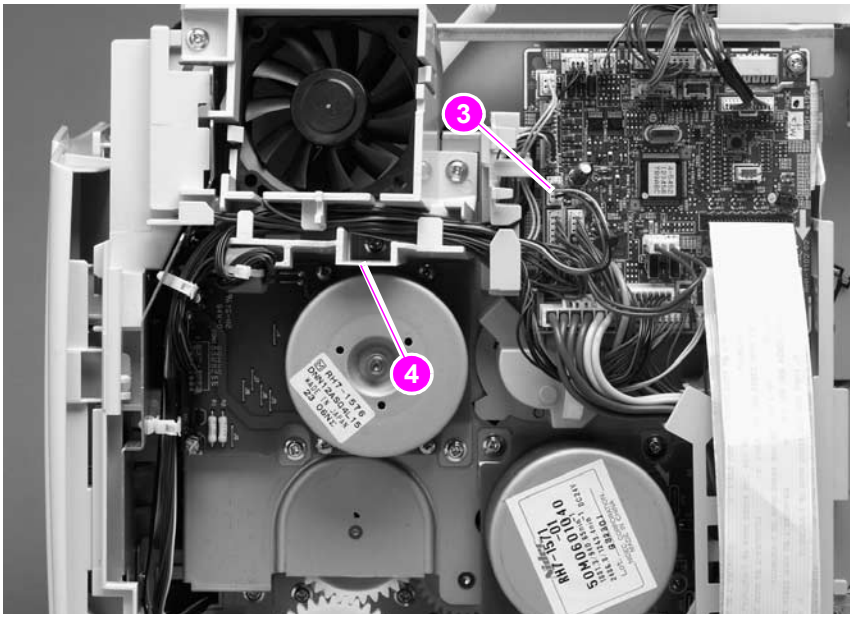

Figure 114. **Cooling fan (HP LaserJet 4300 series only; 3 of 5)**

5. Use a screwdriver to push against the fan through the fan duct, from inside the printer. Release the two retaining tabs (callout 5) and push the fan out of the duct bracket.

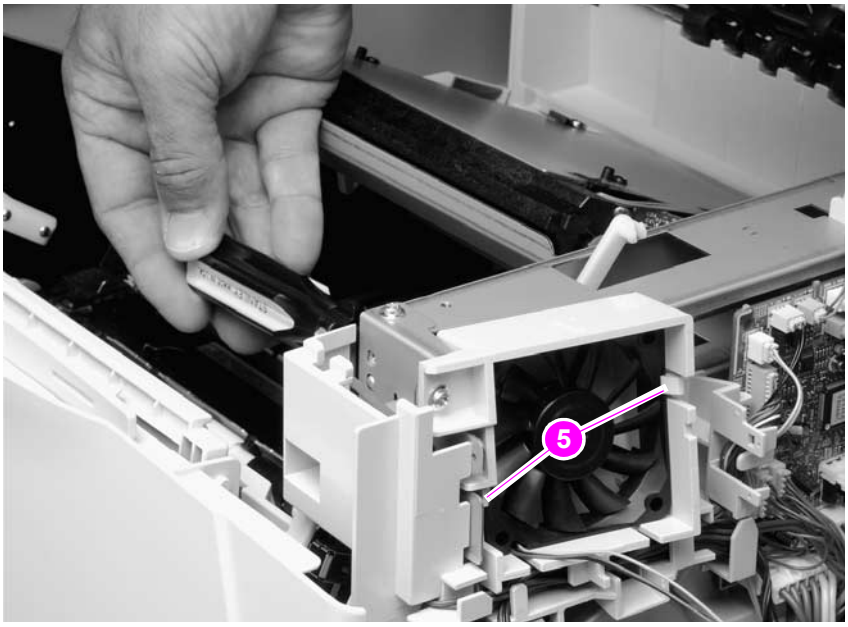

Figure 115. **Cooling fan (HP LaserJet 4300 series only; 4 of 5)**

Reinstall note When you install the fan, the air *must* flow into the printer. Verify that the airflow arrows that are embossed on the fan body point *into* the printer. Verify that each harness connector on the DC controller PCA is fully seated. These connectors can become partially unplugged when the harnesses are unwoven from the guide on the fan duct.

Download Free Service Manual at http://printer1.blogspot.com

6. If it is necessary to remove the fan duct (for example, if the main drive assembly is going to be removed), unweave the remaining wire-harness (callout 6) from the harness guide (callout 7). Remove two screws (callout 8) and remove the fan-duct bracket.

Hint It might be necessary to unplug various connectors or release some wire-harness retainer clips to provide enough slack in the wire-harnesses to unweave them easily from the harness guide.

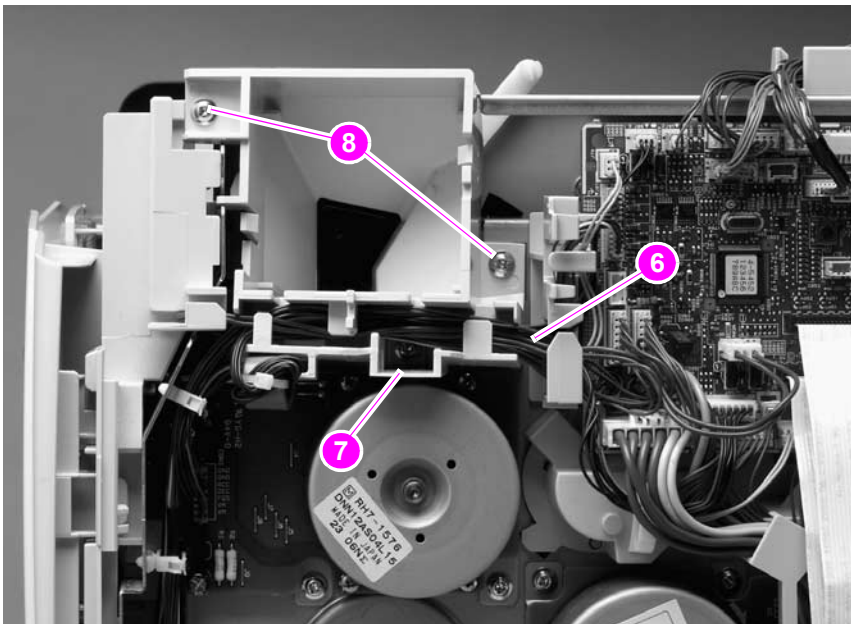

Figure 116. **Cooling fan (HP LaserJet 4300 series only; 5 of 5)**

Download Free Service Manual at http://printer1.blogspot.com

Laser/scanner assembly

1. Remove the following assemblies:
   - Top cover. See "Top cover" on page 146.
   - Right-side cover. See "Right-side cover" on page 149.
2. Unplug the laser/scanner wire-harness connector from the DC controller PCA (location J84; callout 1). Remove the laser/scanner wire-harness from the wire guide (callout 2).

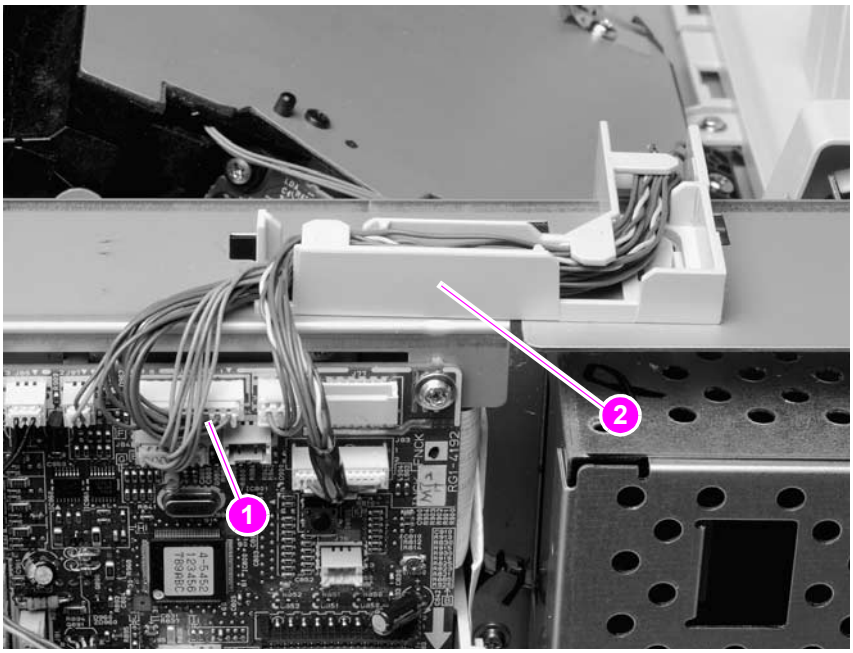

Figure 117. **Laser/scanner (1 of 4)**

3. Unplug the laser/scanner wire-harness (callout 3) from the laser/scanner PCA

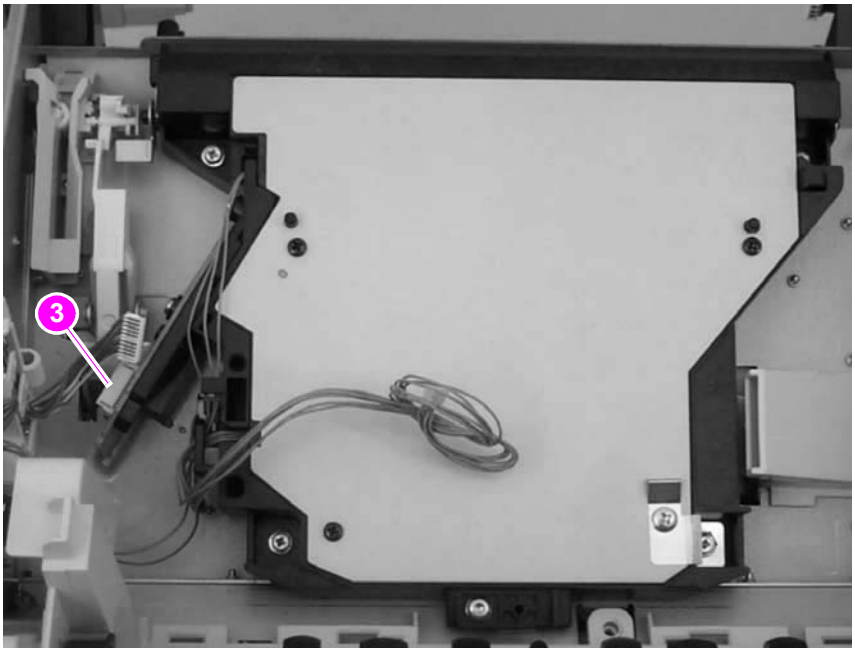

Figure 118. **Laser/scanner (2 of 4)**

Download Free Service Manual at http://printer1.blogspot.com

4. Remove four screws (callout 4). Do *not* turn the laser/scanner adjustment screw (circled).

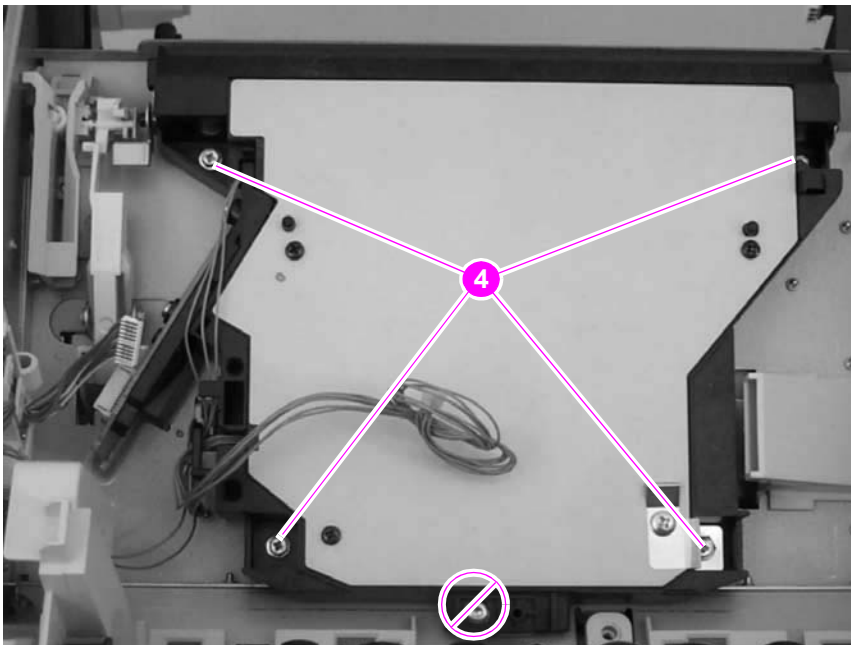

Figure 119. **Laser/scanner (3 of 4)**

Reinstall note The two front mounting screws have grounding clips that are not captive when the screws are removed. Be sure to replace these clips when the laser/scanner is installed.

5. Carefully lift the laser/scanner up and out of the printer. Make sure the wires along the bottom of the laser/scanner assembly don't get snagged by the assembly when the assembly is removed.

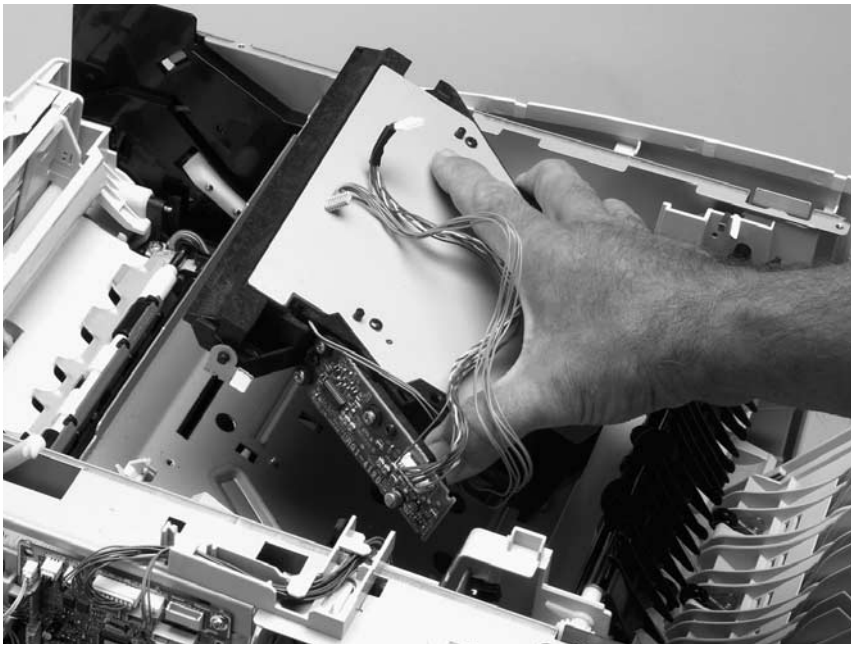

Figure 120. **Laser/scanner (4 of 4)**

CAUTION When the laser/scanner assembly is installed, make sure that the wire-harnesses are properly routed through the cable guides. It the wire-harnesses are not properly routed, they can be damaged when the top cover is installed.

Download Free Service Manual at http://printer1.blogspot.com

Print-cartridge motor (HP LaserJet 4300 series printer only)

Note This motor is not installed on the HP LaserJet 4200 series printer.

1. Remove the following assemblies:
   - Top cover. See "Top cover" on page 146.
   - Right-side cover. See "Right-side cover" on page 149.
2. Unplug the print-cartridge motor wire-harness connector from the DC controller PCA (location J86; callout 1). Unweave the harness from the wire guide (callout 2).

Hint It might be necessary to remove additional wire-harnesses from the wire guide to gain access to the print-cartridge motor wire-harness.

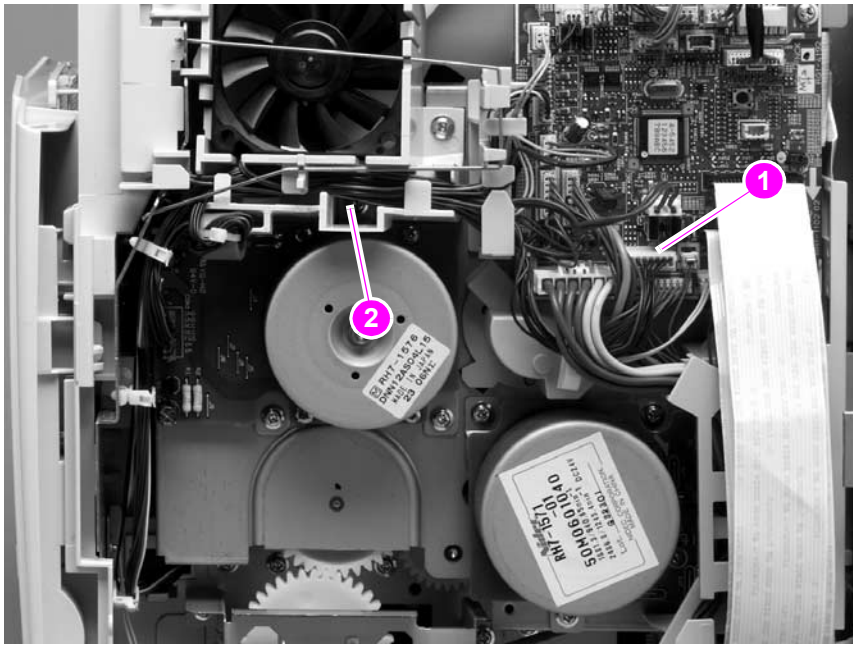

Figure 121. **Print-cartridge motor (HP LaserJet 4300 series only; 1 of 2)**

Download Free Service Manual at http://printer1.blogspot.com

3. Slip the toroid (callout 3) off of its retainer clip. Support the motor and remove three screws (callout 4). Remove the print-cartridge motor.

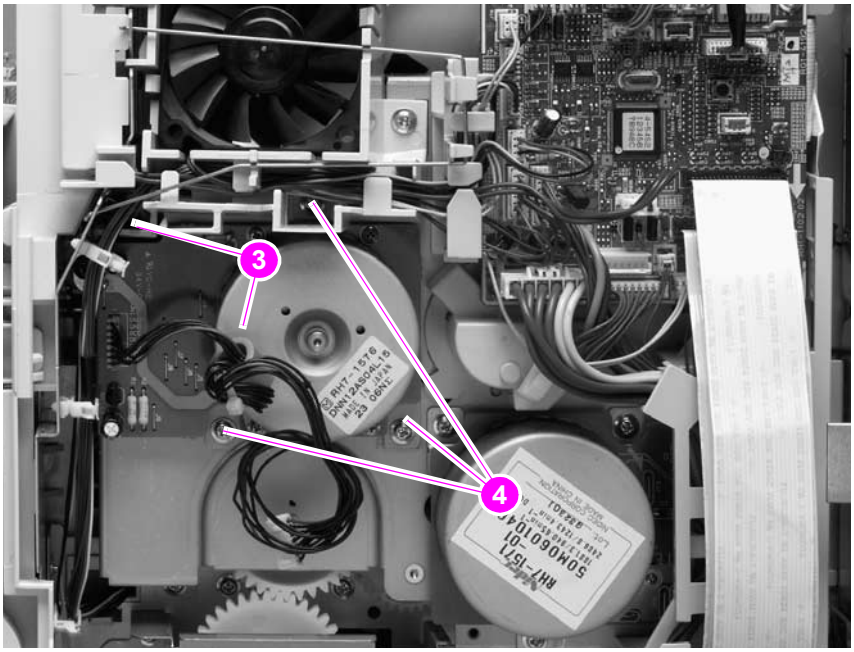

Figure 122. **Print-cartridge motor (HP Laserjet 4300 series only; 1 of 2)**

Download Free Service Manual at http://printer1.blogspot.com

Main motor

1. Remove the following assemblies:
   - Top cover. See “Top cover” on page 146.
   - Right-side cover. See “Right-side cover” on page 149.
2. Unplug the power-supply ribbon cables and the main motor harness connector from the DC controller PCA (locations J80, J81, and J98; callout 1). Unweave all of the wire-harnesses from the wire guide (callout 2).

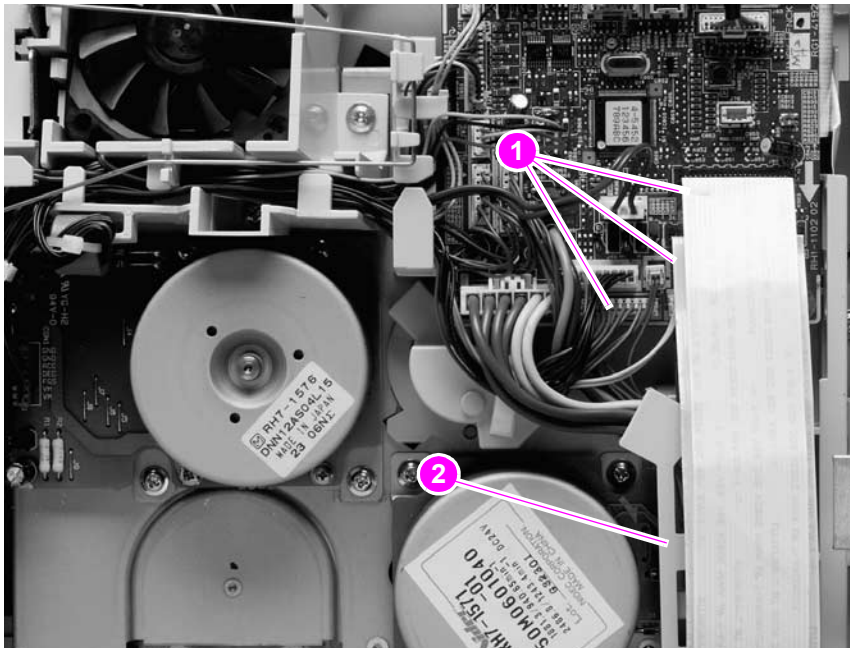

Figure 123. **Main motor (1 of 3)**

3. Push in on the wire guide locking tabs (callout 3) to release the guide and push down to remove it.

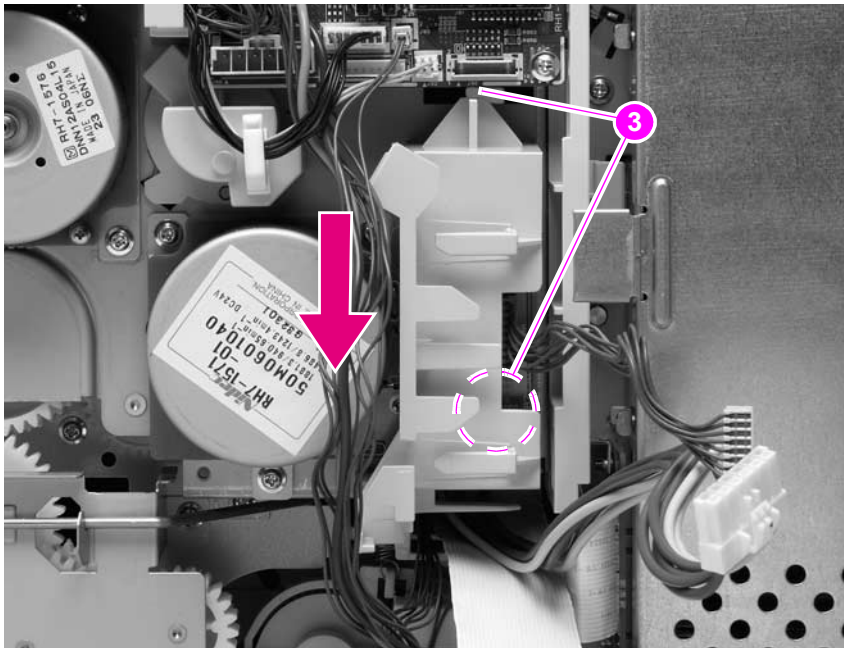

Figure 124. **Main motor (2 of 3)**

Download Free Service Manual at http://printer1.blogspot.com

4. Remove three screws (callout 4). Remove the main motor.

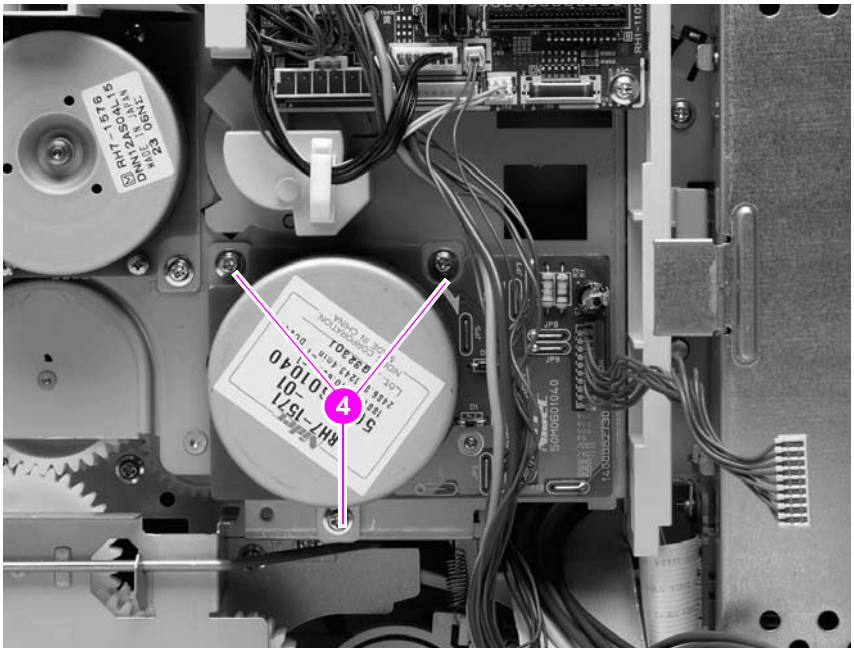

Figure 125. **Main motor (3 of 3)**

Download Free Service Manual at http://printer1.blogspot.com

Tray 2 lifter-drive assembly

1. Remove the following assemblies:
   - Top cover. See “Top cover” on page 146.
   - Right-side cover. See “Right-side cover” on page 149.
2. Use a small flat-blade screwdriver to pry up the lifter-drive assembly connector (callout 1) retaining tab and unplug the connector from the DC controller PCA (location J93). Unweave the harness from the wire guides (callout 2).

Hint It might be necessary to remove additional wire-harnesses from the wire guide to gain access to the lifter-drive assembly wire-harness.

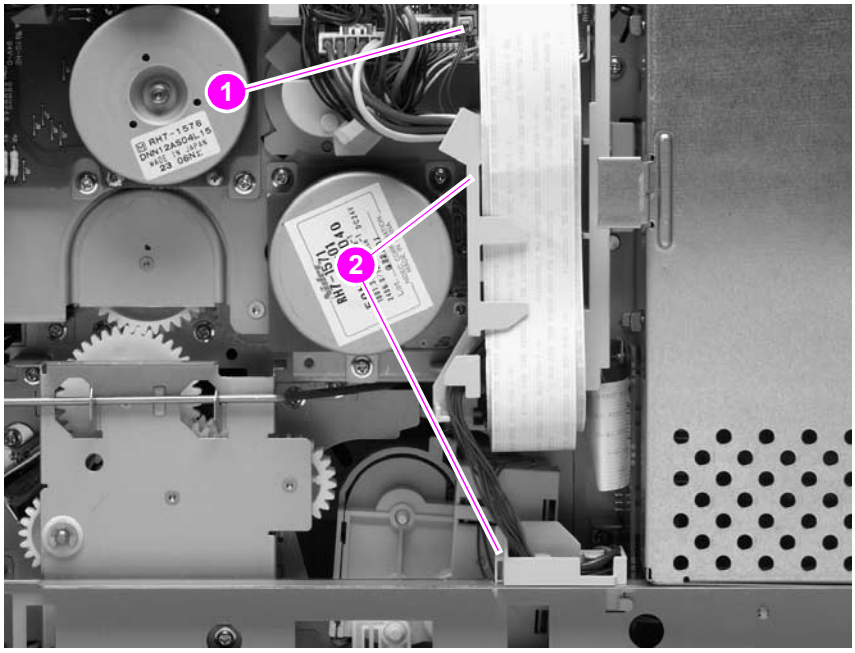

Figure 126. **Tray 2 lifter-drive assembly (1 of 2)**

Download Free Service Manual at http://printer1.blogspot.com

3. Unhook the tension spring (callout 3). Remove one screw (callout 4). Remove the lifter-drive assembly.

Hint It might be necessary to remove some wire guides to easily remove the lifter-driver assembly.

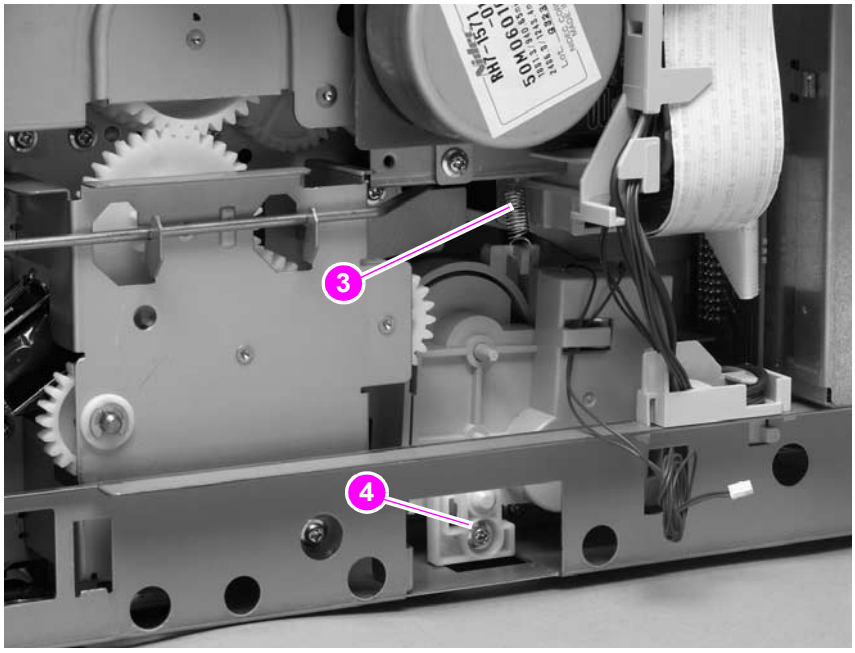

Figure 127. **Tray 2 lifter-drive assembly (2 of 2)**

Download Free Service Manual at http://printer1.blogspot.com

DC controller PCA

1. Remove the following assemblies:
   - Top and right-side covers. See "Top cover" on page 146 and "Right-side cover" on page 149.
   - Formatter assembly. See "Formatter assembly" on page 161.

CAUTION The product contains components that are sensitive to electrostatic discharge (ESD). Always perform service work at an ESD-protected workstation. If an ESD-protected workstation is not available, discharge body static by grasping the printer chassis before touching an ESD-sensitive component. Ground the printer chassis *before* servicing the product.

CAUTION The yellow and blue heavy-gauge wires connected to DC controller PCA locations TB85 and TB86 (callout 3) are *not* terminal lug connectors. These terminals are soldered to the DC controller PCA. Do *not* attempt to forcibly unplug these connectors.

2. Unplug all of the wire/cable connectors from the DC controller PCA (callout 1). Remove two screws (callout 2).

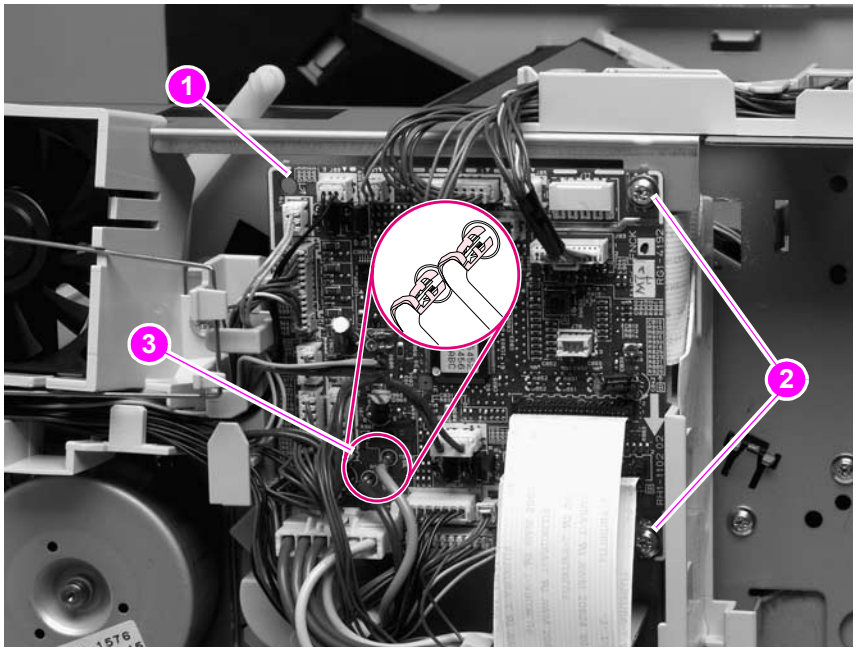

Figure 128. **DC controller PCA (1 of 3)**

Download Free Service Manual at http://printer1.blogspot.com

3. Remove the two screws (callout 4) that fasten the formatter connector bracket to the chassis. Unweave the formatter connector wire-harness from the wire guides (callout 5).

Hint It might be necessary to remove additional wire-harnesses from the wire guide to gain access to the formatter connector harness.

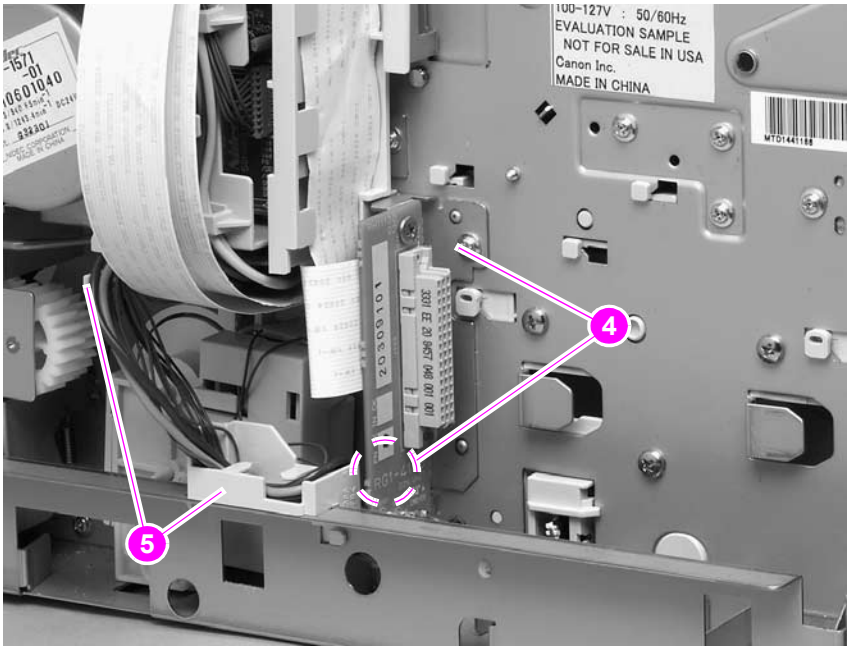

Figure 129. **DC controller PCA (2 of 3)**

4. Push in on the locking tab (callout 6) on the rear of the DC controller PCA wire guide (callout 6), and then push up on the guide to release it. Remove the DC controller PCA and formatter connector assembly.

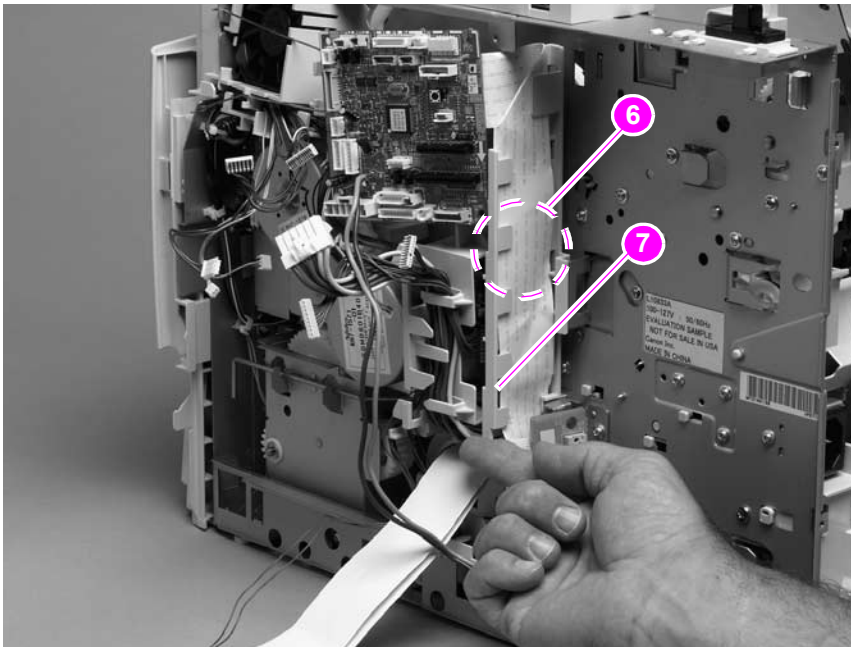

Figure 130. **DC controller PCA (3 of 3)**

Download Free Service Manual at http://printer1.blogspot.com

Paper-pickup assembly,

1. Remove the following assemblies:
   - Top cover. See “Top cover” on page 146.
   - Right-side cover. See “Right-side cover” on page 149.
2. Remove one e-clip (callout 1) and the shaft collar (callout 2). Lift the power-switch connector-bar (callout 3) up and swing it away from the paper-pickup gear assembly.

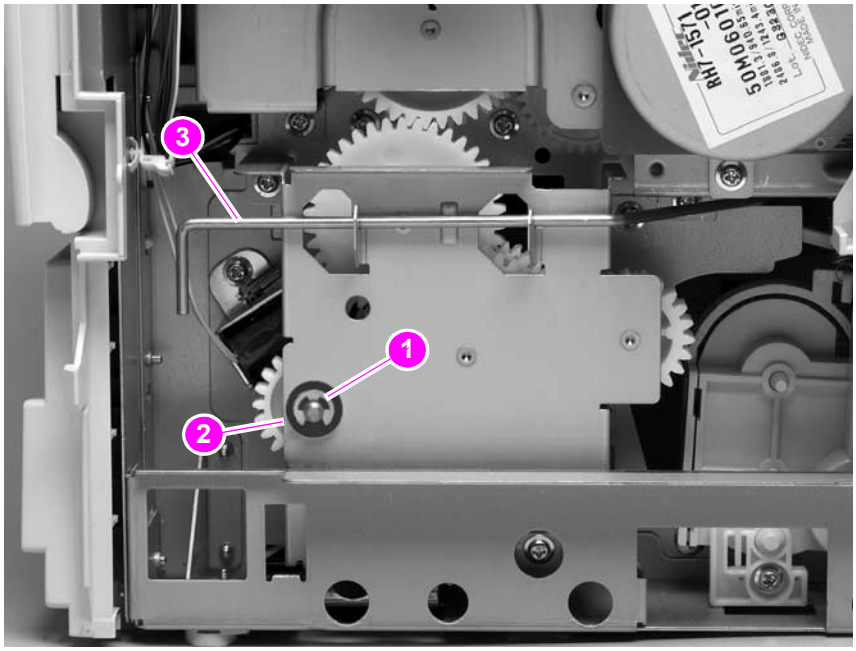

Figure 131. **Paper-pickup assembly (1 of 5)**

3. From the right side of the printer, push the tray drive-gear/shaft into the tray 2 cavity and remove it.

Note The large gear inside of the paper-pickup assembly is not captive and will slide off of the shaft and be loose inside the paper-pickup assembly (see “Tray 2 drive gear and shaft” on page 185).

Figure 132. **Paper-pickup assembly (2 of 5)**

Download Free Service Manual at http://printer1.blogspot.com

4. Unplug the paper-pickup gear assembly solenoid (callout 4) connector from the DC controller PCA (location J92; callout 5). Unweave the solenoid wire-harness from the wire guide and the cable clips (callout 6).

Hint It might be necessary to remove additional wire-harnesses from the wire guide to gain access to the solenoid wire-harness.

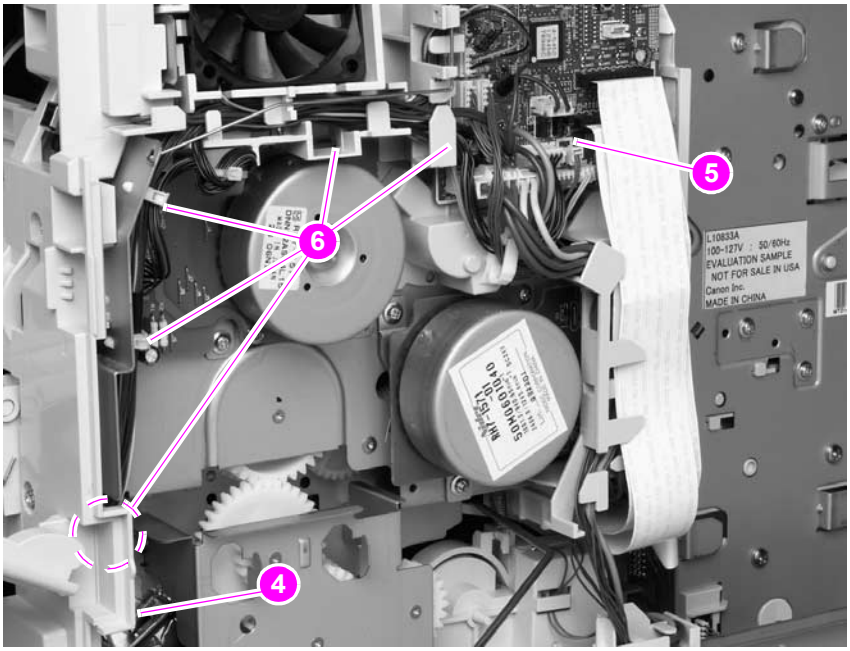

Figure 133. **Paper-pickup assembly (3 of 5)**

5. Remove four screws (callout 7). Reach inside the printer and push the rear tray 2 feed roller up into its raised position (see "Tray 2 feed rollers (4 of 4)" on page 142). This disengages the roller lifting arm (callout 8) from the clutch gear.

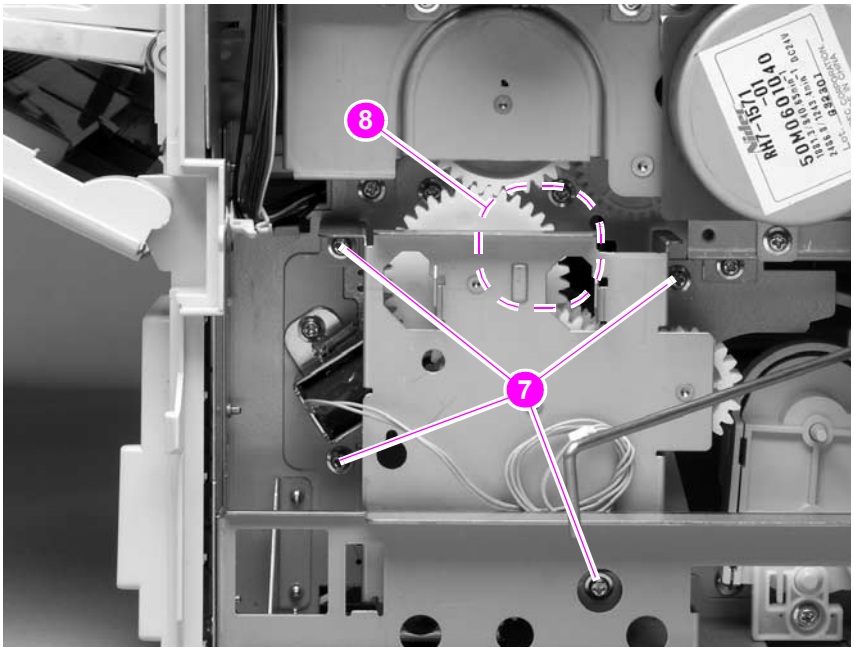

Figure 134. **Paper-pickup assembly (4 of 5)**

Download Free Service Manual at http://printer1.blogspot.com

6. Remove the paper-pickup gear assembly.

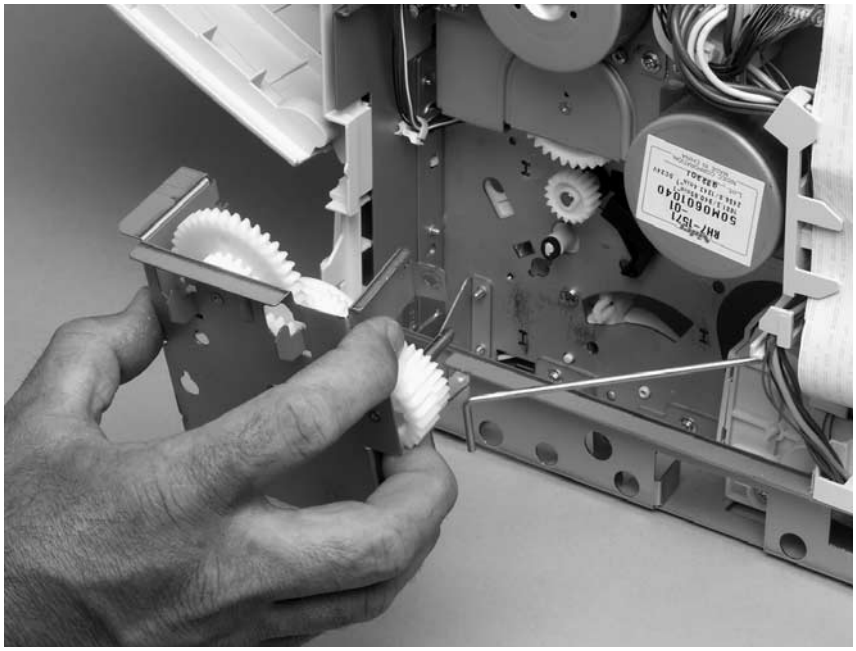

Figure 135. **Paper-pickup assembly (5 of 5)**

Reinstall note

When you install the tray 2 drive gears and shaft, verify that the gears are seated on the shaft locking bars and that the shaft collars are correctly positioned in the paper-pickup gear assembly mounting bracket and printer chassis.

When you install the paper-pickup assembly, reach up inside the printer and push the rear feeder roller (see figure 68 on page 142) up into its raised position. Position the paper-pickup assembly onto the chassis (it should sit flush against the chassis) and then lower the roller into its resting position. This ensures that the feeder lever rests correctly on the large gear in the paper-pickup assembly.

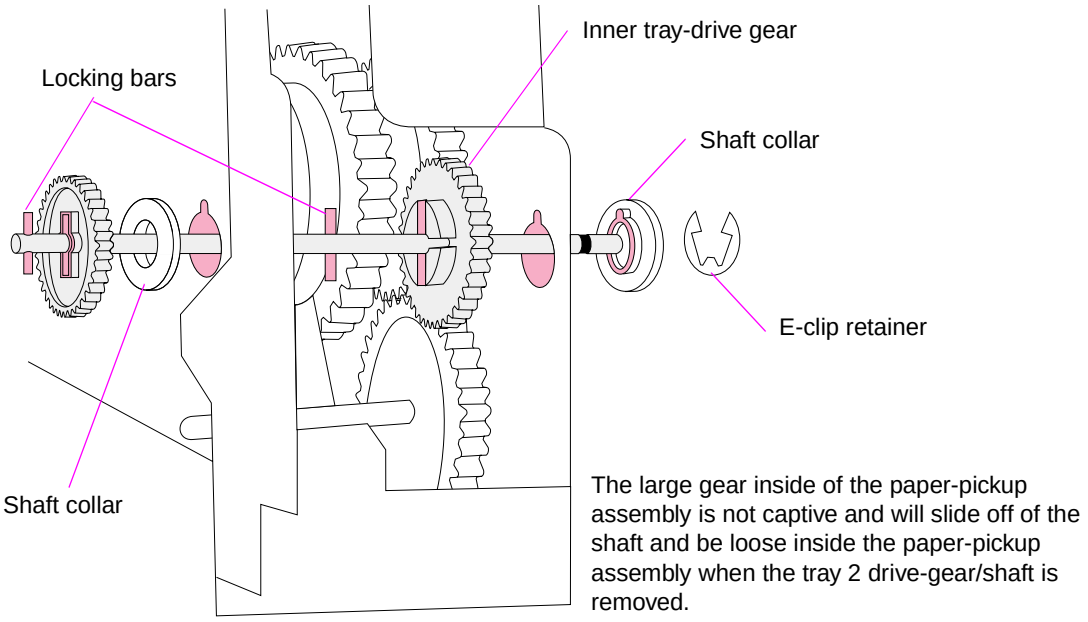

Figure 136. **Tray 2 drive gear and shaft**

Download Free Service Manual at http://printer1.blogspot.com

Main drive assembly

1. Remove the following assemblies:
   - Top and right-side covers. See “Top cover” on page 146 and “Right-side cover” on page 149.
   - Right-side fan (HP LaserJet 4300 series only) and fan duct. See “Cooling fan (right side; HP LaserJet 4300 series printer only)” on page 170.
   - Print-cartridge motor (HP LaserJet 4300 series only). See “Print-cartridge motor (HP LaserJet 4300 series printer only)” on page 175.
   - DC controller PCA. See “DC controller PCA” on page 181.
2. Use needle-nose pliers to release the lifting assembly spring (callout 1). Lift up the power switch arm (callout 2) and rotate it away from the chassis.

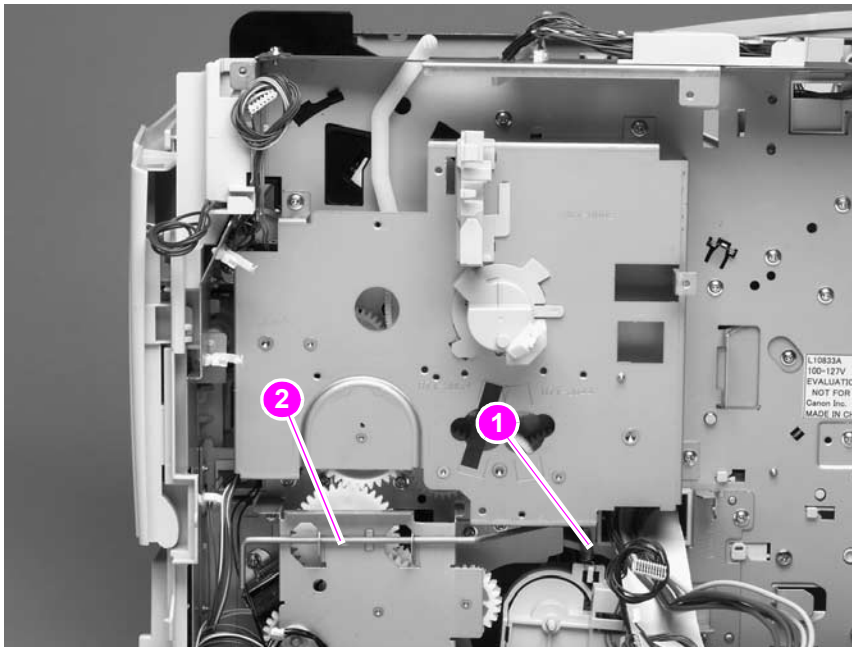

Figure 137. **Main drive assembly (1 of 2)**

Download Free Service Manual at http://printer1.blogspot.com

3. Remove five screws (callout 3). Remove the main drive assembly.

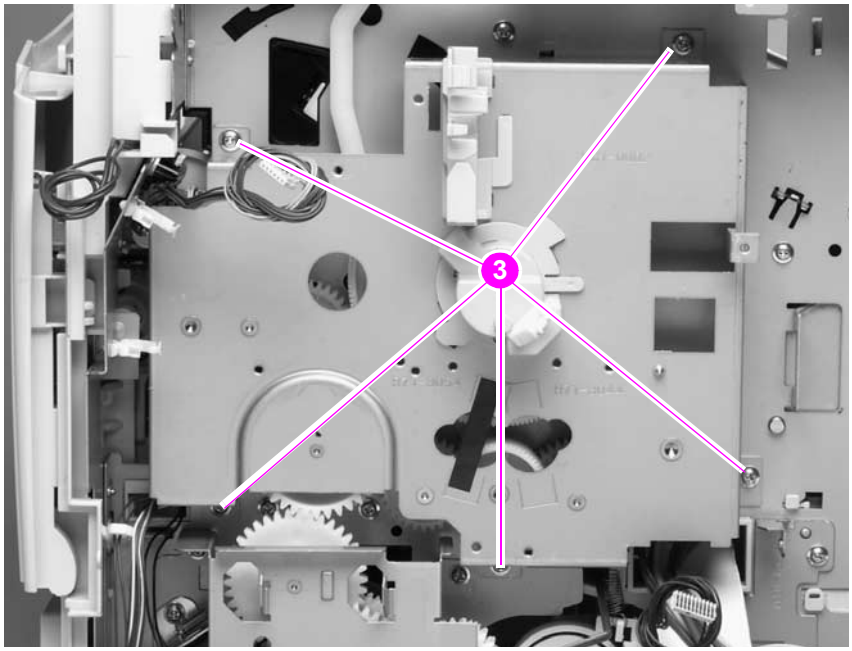

Figure 138. **Main drive assembly (2 of 2)**

Download Free Service Manual at http://printer1.blogspot.com

Power supply

1. Remove the following assemblies:
   - Rear output bin. See "Rear output bin" on page 155.
   - Rear accessory cover and tray 2 extension door. See "Accessory covers and the tray 2 extension door" on page 143.
   - Top, right-side, and left-side covers. See "Top cover" on page 146 through"Left-side cover" on page 151.
   - Fuser. See "Fuser" on page 162.
   - Formatter assembly. See "Formatter assembly" on page 161.
2. Unplug the two power-supply ribbon cables and the DC controller power connector from the DC controller (locations J80, J81, and J99; callout 1). Unweave the wire-harness and cables from the wire guide (callout 2). Remove four screws (3 machine and 1 ground screw; callout 3).

Hint It might be necessary to remove additional wire-harnesses from the wire guide to gain access to the power-supply harness.

CAUTION Also note the position of the ribbon cables and power cables through the bottom of the wire guide (callout 2). Failure to route these cables properly through the bottom of the wire guide might result in interference with the tray 2 lifter-driver assembly and the cable might be damaged during printer operation.

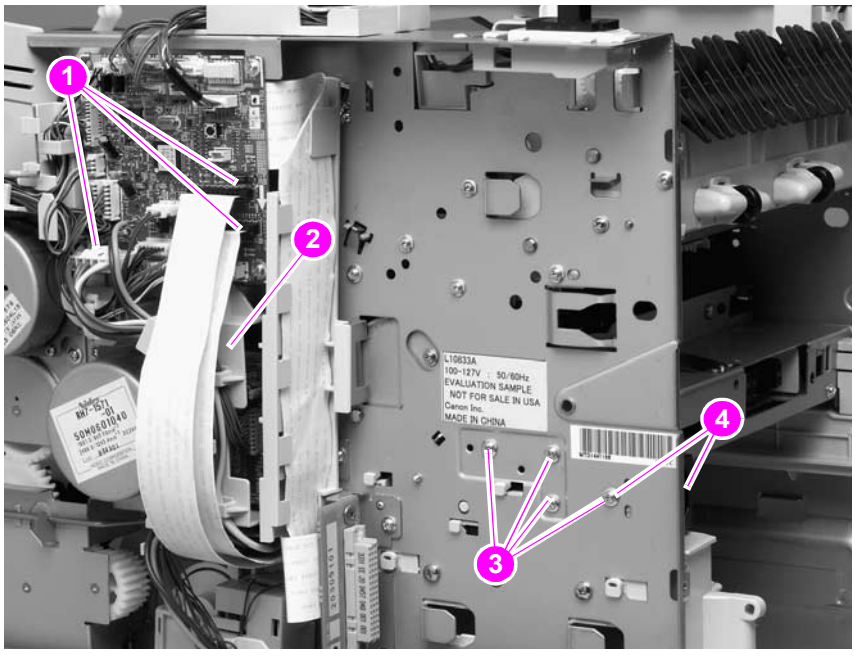

Figure 139. **Power supply (right side; 1 of 5)**

WARNING! When installing the power supply, you must use a ground screw (callout 4) to secure the AC outlet (callout 4) to the printer chassis.

Download Free Service Manual at http://printer1.blogspot.com

3. Remove two screws (callout 4). Depress the tray 2 right-side guide lock (callout 5) and slide the guide (callout 6) toward the back of the chassis to release it. Remove the guide. Rotate the power-switch connector bar (callout 7) away from the printer.

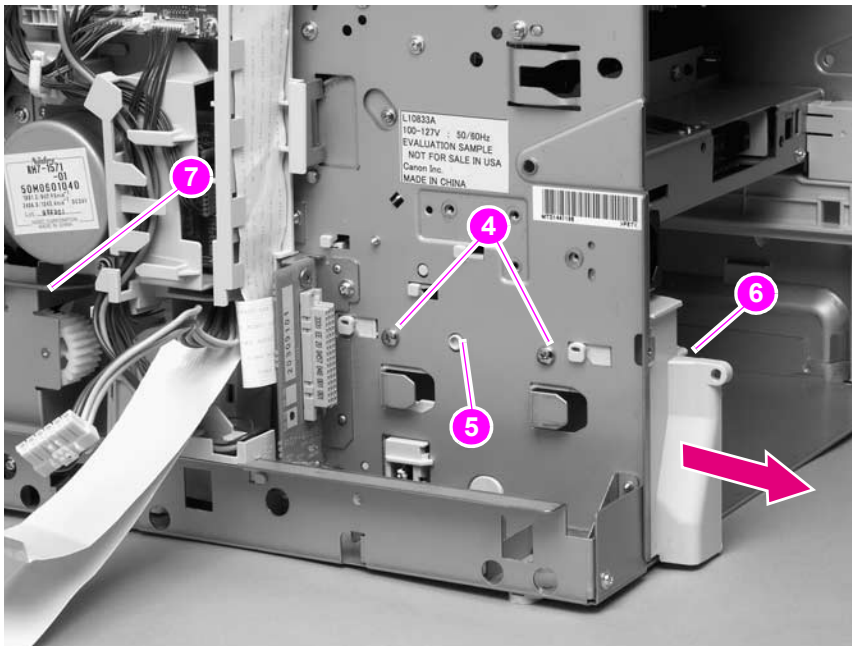

Figure 140. **Power supply (2 of 5)**

4. Remove five screws (callout 8). Unplug the left-side fan and thermistor sensor connectors on the power-supply PCA (callout 9; behind the cover plate).

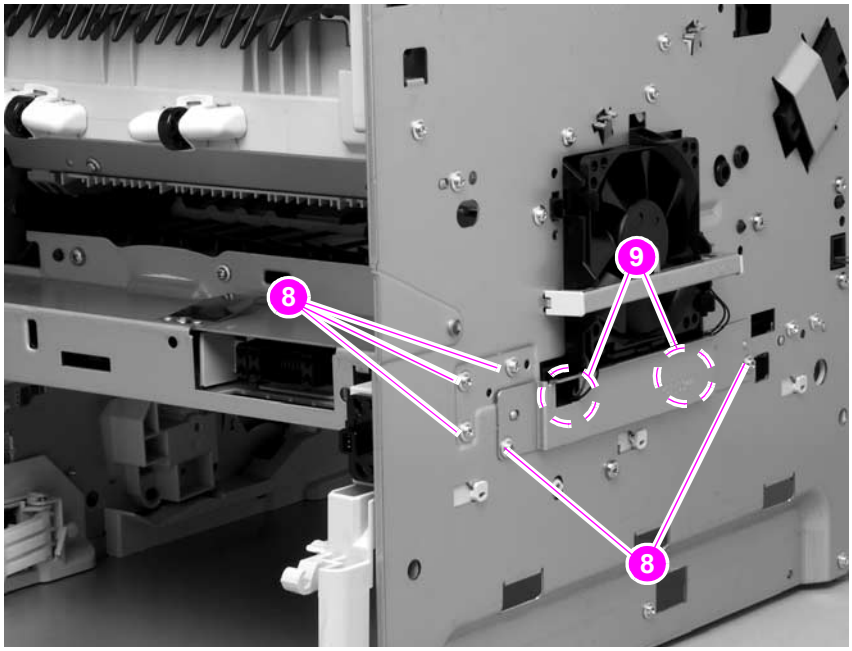

Figure 141. **Power supply (left side; 3 of 5)**

Download Free Service Manual at http://printer1.blogspot.com

5. Feed the two ribbon cables and the wire-harness through the hole in the right side of the chassis (callout 9) under the power supply. Pull down on the power-switch connector bar (callout 10) to slide it out of its mounting bracket, and remove it.

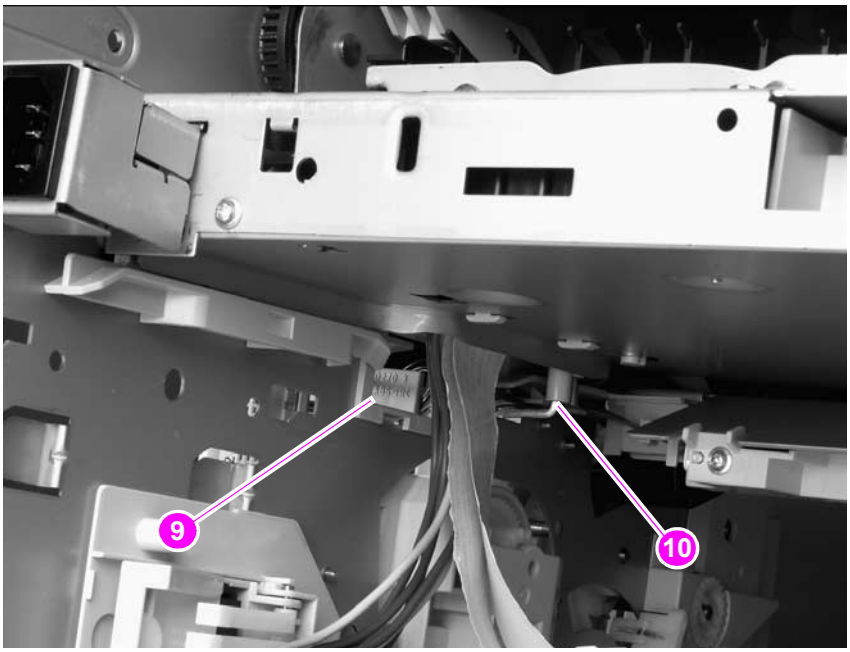

Figure 142. **Power supply (tray 2 cavity; 4 of 5)**

CAUTION When performing the next step, verify that the four rubber belts and plastic rollers (callout 3 in figure 145 on page 191) remain in place. These belts and rollers can easily come off and you might lose them.

6. Grasp the power supply and lift it up slightly. Pull it straight out of the chassis.

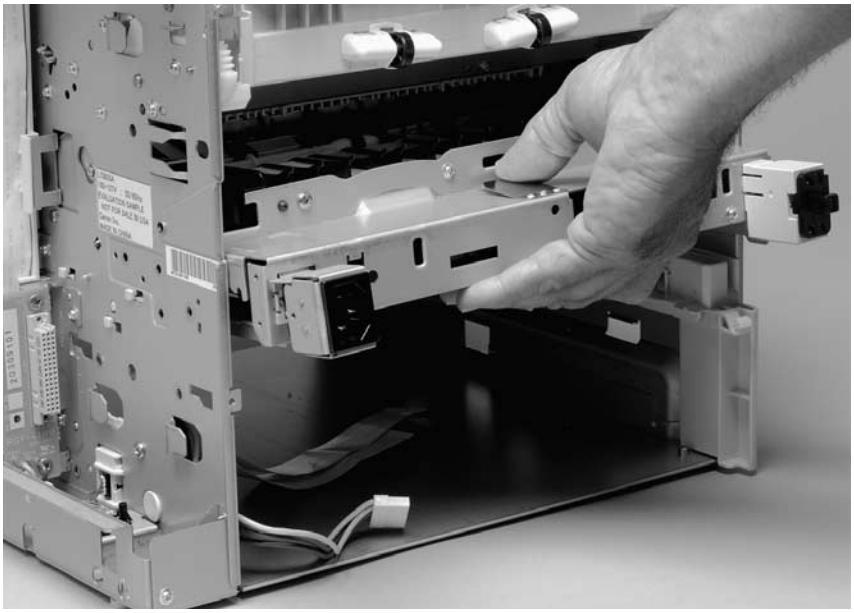

Figure 143. **Power supply (5 of 5)**

Reinstall note After you install the power supply, thread the heavy-gauge wire-harness through the hole in the chassis first, and then thread the two ribbon cables through the hole. This prevents the harness and cables from crossing over each other when they are placed in the wire guide. Make sure you install the power-switch connector bar when you install the power supply.

Download Free Service Manual at http://printer1.blogspot.com

Paper-feed belt assembly

1. Remove the power supply. See "Power supply" on page 188.
2. Remove three screws (callout 1).

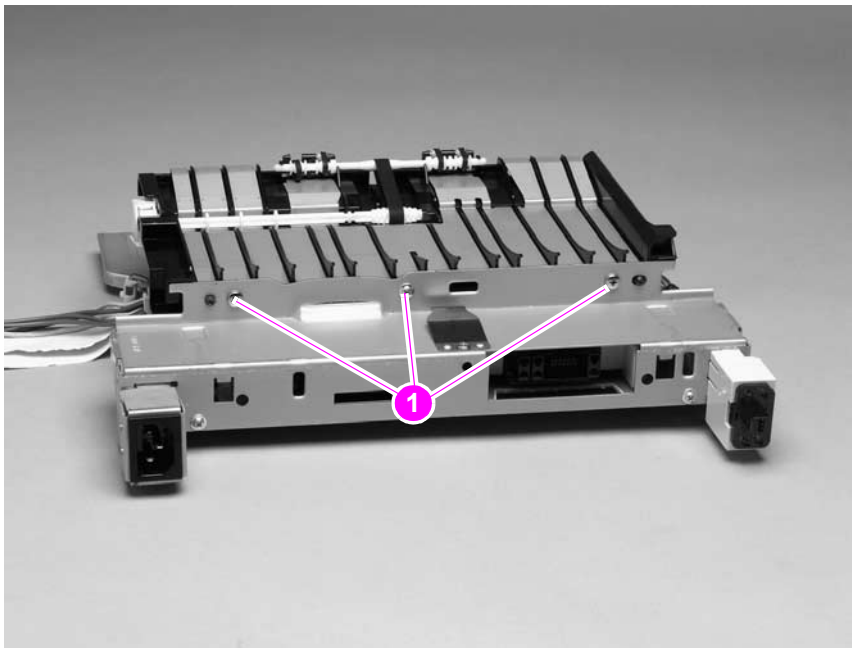

Figure 144. **Paper-feed belt assembly (1 of 2)**

CAUTION Verify that the four rubber belts and plastic rollers (callout 3) remain in place. These belts and rollers can easily come off and be lost.

When you install the paper-feed belt assembly, verify that the center foot (on the power-supply side; callout 4) is correctly hooked under the support leg on the power supply.

3. Release the paper-feed belt assembly alignment pins (callout 2). Rotate the assembly toward the back of the power supply and remove it.

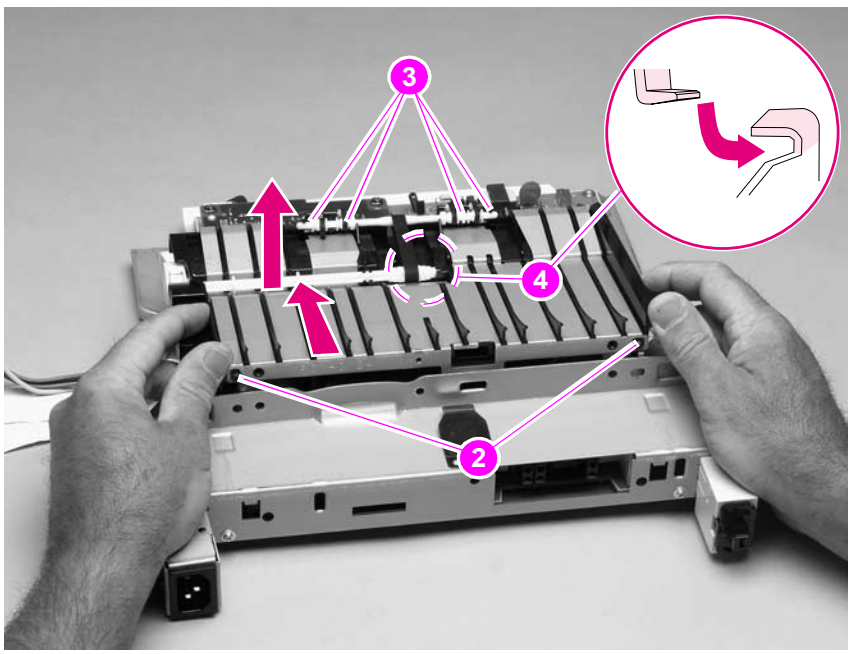

Figure 145. **Paper-feed belt assembly (2 of 2)**

Download Free Service Manual at http://printer1.blogspot.com

Tray 1 paper-pickup assembly

1. Remove the following assemblies:
   - Top, right-side, and left-side covers. See “Top cover” on page 146 through “Left-side cover” on page 151.
   - Tray 1. See “Tray 1” on page 152.
2. Unplug the tray 1 pickup solenoid connector and the top-cover sensor from the DC controller PCA (locations J79 and J95; callout 1). Unweave the harnesses from the wire guide (callout 2).

Hint It might be necessary to remove additional wire-harnesses from the wire guide to gain access to the solenoid and sensor harnesses.

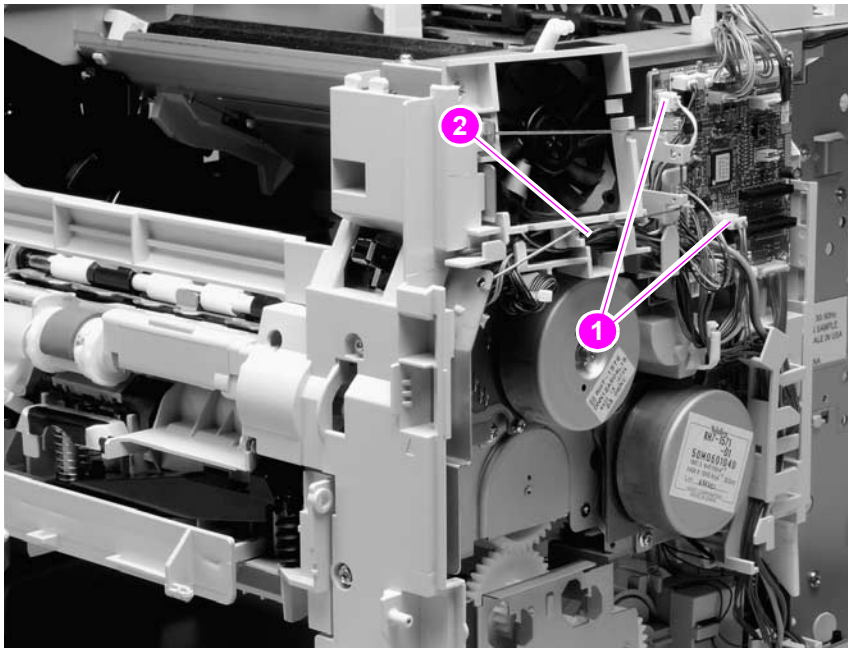

Figure 146. **Tray 1 pickup assembly (1 of 4)**

Download Free Service Manual at http://printer1.blogspot.com

3. Remove three screws (callout 3). Depress the pickup-gear-cover upper retainer tab (callout 4) to release it. Lift up on the cover to release the lower retaining tab (not shown) and remove the cover.

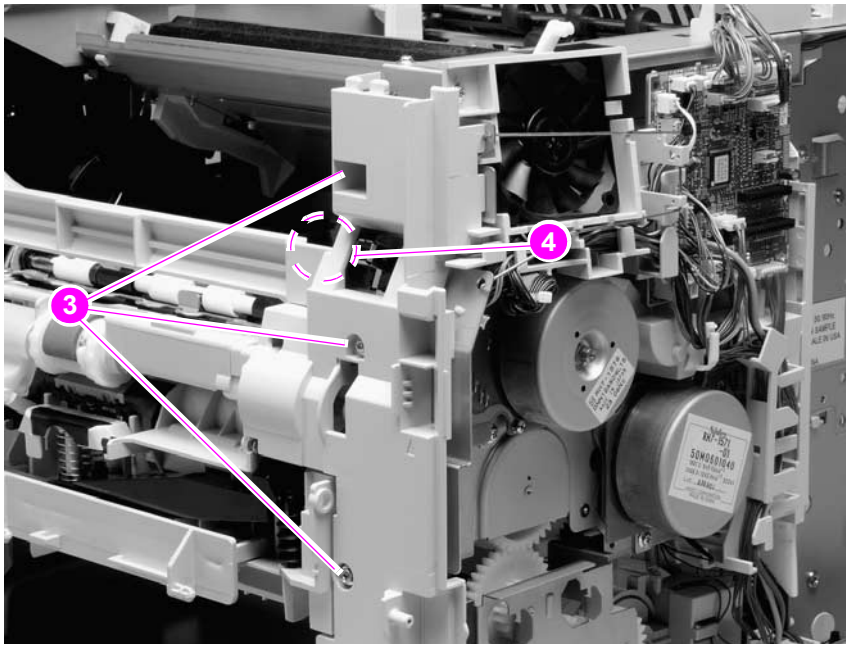

Figure 147. **Tray 1 pickup assembly (2 of 4)**

4. Unplug the pickup sensor connector (callout 5). Remove six screws (callout 6).

Reinstall note One of the screws (callout 7) on the left side is longer that the others. Make sure that this screw is replaced in the same hole it is removed from.

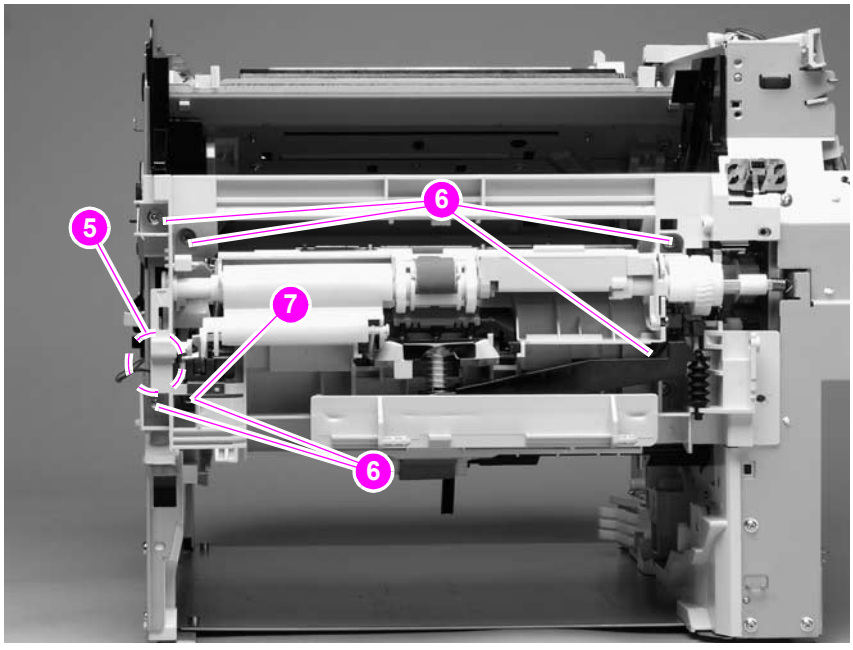

Figure 148. **Tray 1 pickup assembly (3 of 4)**

Download Free Service Manual at http://printer1.blogspot.com

CAUTION Carefully thread the solenoid wire-harness through the hole provided in the chassis. When you remove the pickup assembly, avoid pinching the pickup solenoid wire-harness between the assembly and the chassis.

5. Rotate the left side of the assembly away from the chassis and then slide the assembly to the left to remove it. Carefully feed the pickup assembly solenoid wire-harness through the opening in the chassis as you remove the assembly.

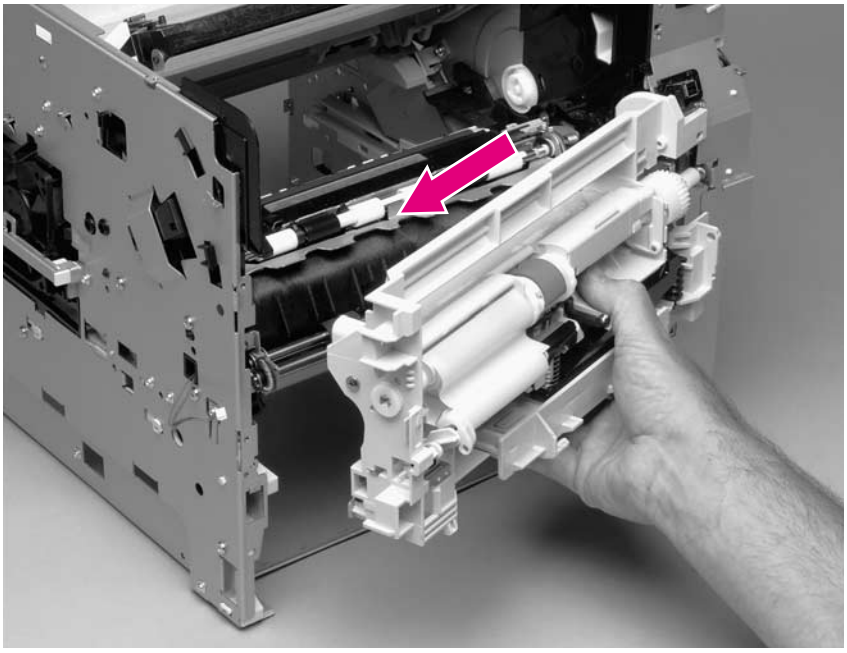

Figure 149. **Tray 1 pickup assembly (4 of 4)**

Reinstall note When you install the pickup assembly, verify that the grounding spring (located on the right-side of the assembly near the drive gear) is correctly positioned against the dimple in the chassis.

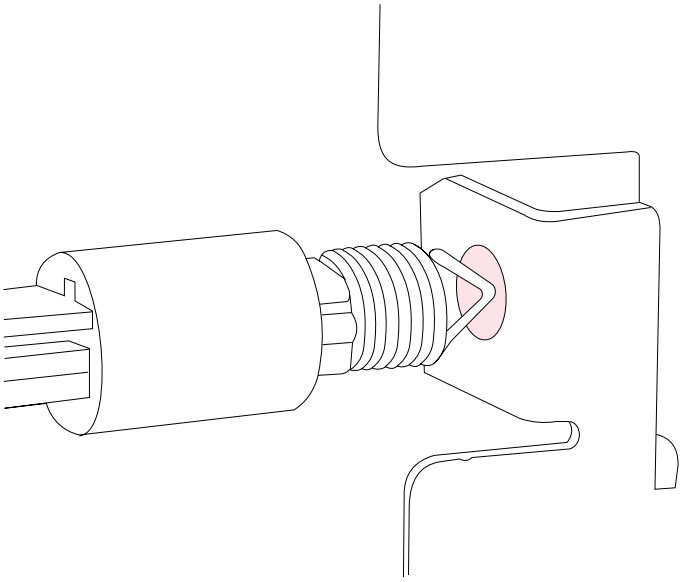

Figure 150. **Correct position of the tray 1 pickup assembly grounding spring**

Download Free Service Manual at http://printer1.blogspot.com

Paper feed assembly

1. Remove the following assemblies:
   - Tray 1. See “Tray 1” on page 152.
   - Tray 1 pickup assembly. See “Tray 1 paper-pickup assembly” on page 192.
2. Unplug the paper-feed assembly wire-harness connector from the DC controller PCA (location J89; callout 1). Unweave the wire-harness from the wire guide (callout 2).

Hint It might be necessary to remove additional wire-harnesses from the wire guides to gain access to the paper-feed assembly wire-harness.

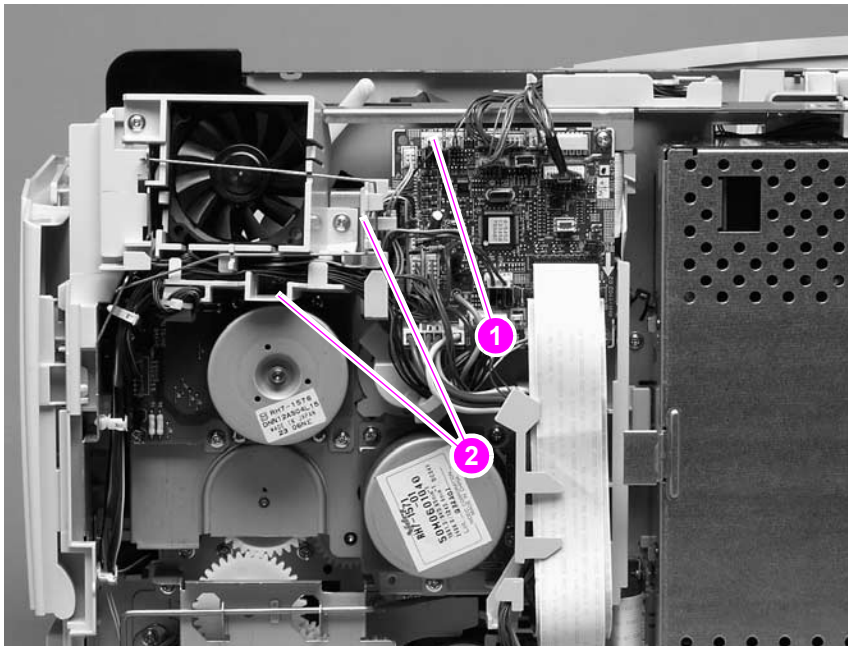

Figure 151. **Paper feed assembly (1 of 2)**

Download Free Service Manual at http://printer1.blogspot.com

3. Feed the paper-feed assembly wire-harness through the hole in the chassis (callout 2). Remove three screws (callout 3).

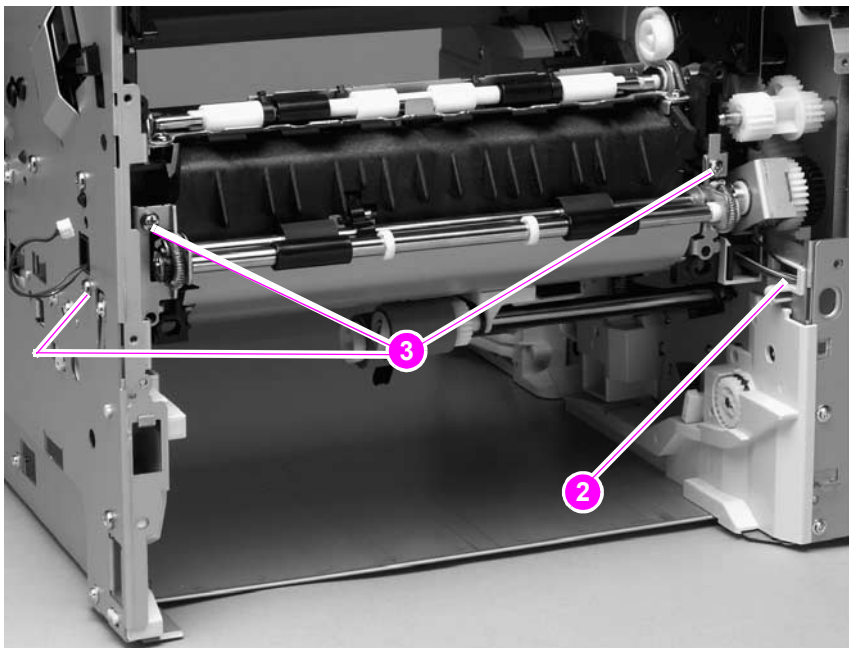

Figure 152. **Paper-feed assembly (2 of 2)**

Download Free Service Manual at http://printer1.blogspot.com

Reinstall note

When the paper feed assembly is installed, the sensor-flag spring must be correctly positioned for the flag to operate. If a paper-jam error message (`13.20.00 JAM`) appears on the control-panel display after you replace the paper feed assembly, verify that this sensor-flag spring is installed correctly.

Hook the spring over the flag tab (see 1 in Figure 153). Fasten the paper feed assembly to the chassis with the flag spring positioned in the hole in the transfer assembly. Release the spring from the tab on the flag (see 2 in Figure 153). See figure 153 below.

Verify that the flag is held in the upright position, can freely move, and always returns to the upright position. If the flag does not move freely, or return to the upright position, an error message (`13.20.00 JAM`) will appear on the control-panel display when the printer power is turned on.

Reinstall note

Verify that the clutch tab on the right side of the paper feed assembly is inserted into the hole in the plastic frame.

Hint

The anti-static bar (see "Cooling fan (right side; HP LaserJet 4300 series printer only)" on page 170) can be used to release the sensor spring.

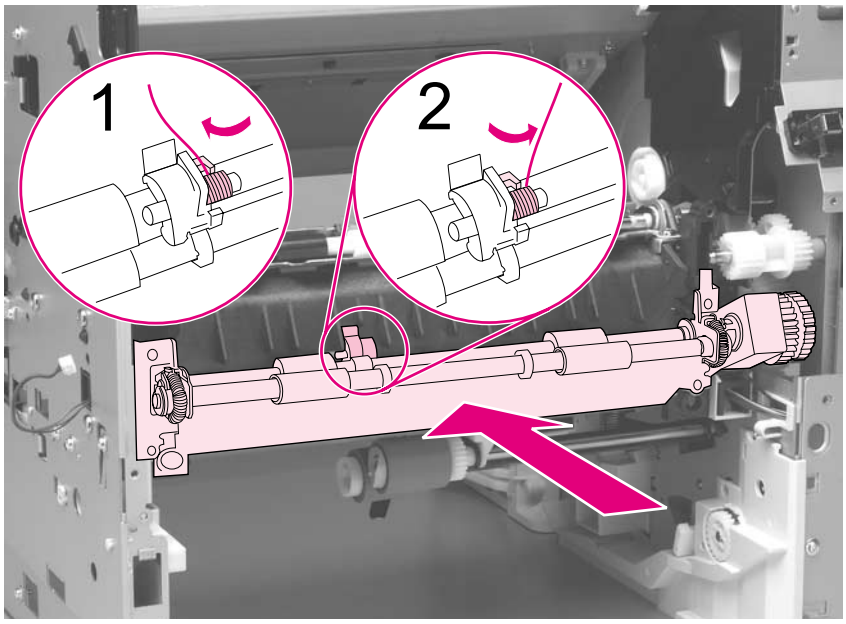

Figure 153. **Correctly install the paper-feed assembly sensor flag**

Download Free Service Manual at http://printer1.blogspot.com

Registration assembly

1. Remove the main drive assembly. See “Main drive assembly” on page 186.
2. Remove one e-clip retainer (callout 1) and one screw (callout 1). Remove the registration roller drive gear (callout 2).

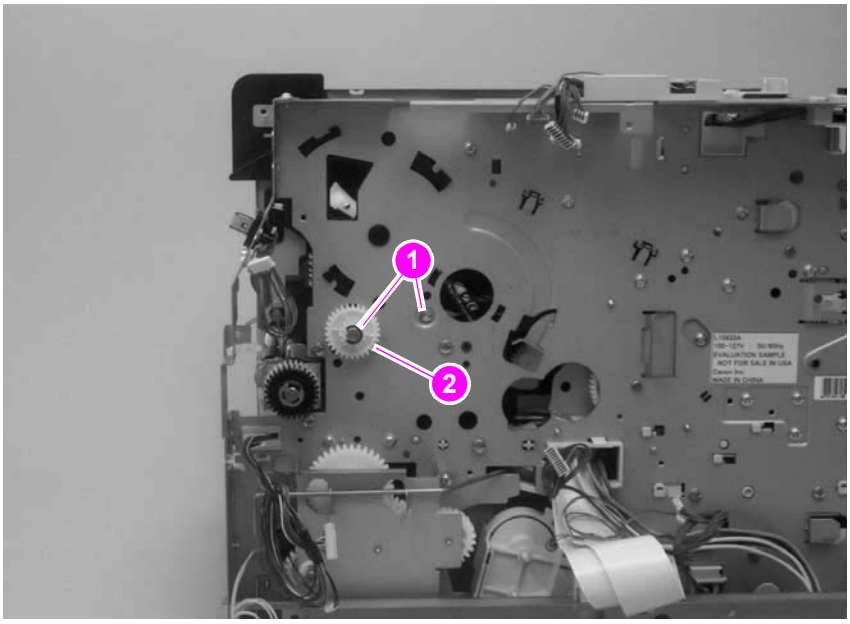

Figure 154. **Registration assembly (1 of 3)**

3. Remove three screws (callout 3).

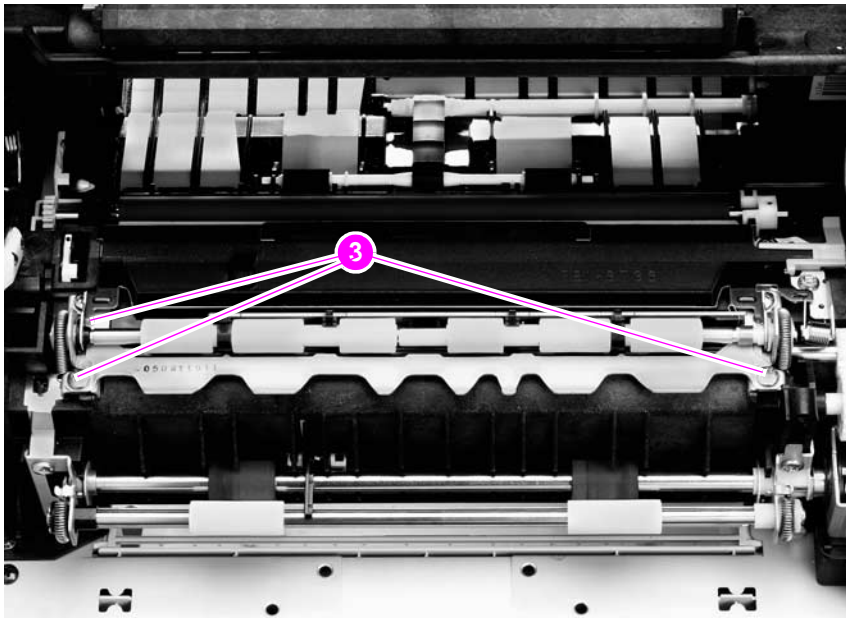

Figure 155. **Registration assembly (2 of 3)**

Download Free Service Manual at http://printer1.blogspot.com

CAUTION Do not remove the screw (callout 4) that holds the registration-roller plate return spring in place. It is not necessary to remove this spring.

4. Use the green handle (located at the right edge of the registration plate) to raise the registration-roller plate. Remove three screws (two large self-tapping screws on the right-hand side and one silver machine screw; callout 5). Remove the registration assembly.

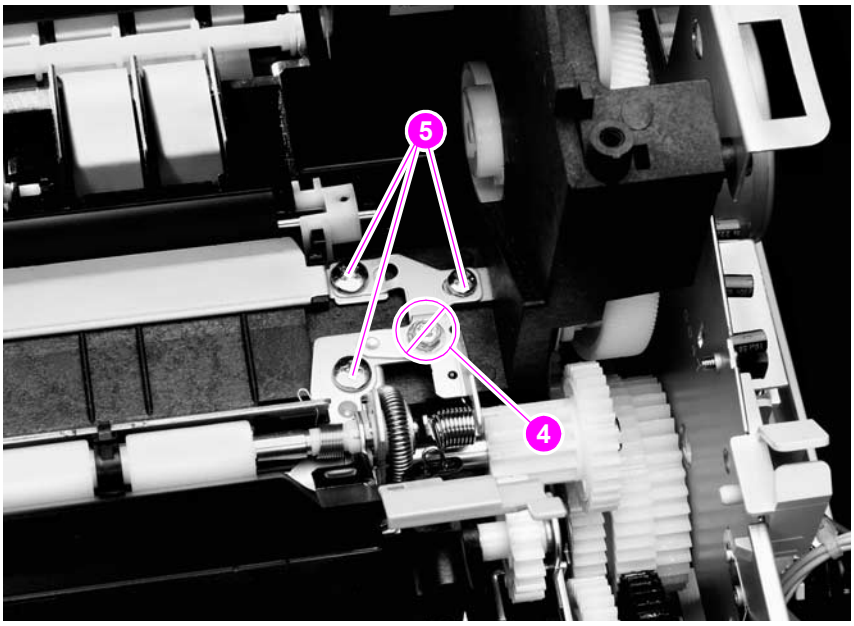

Figure 156. **Registration assembly (3 of 3)**

Download Free Service Manual at http://printer1.blogspot.com

Transfer assembly

1. Remove the following assemblies:
   - Output delivery assembly. See “Output delivery assembly” on page 163.
   - Paper-pickup and main drive assemblies. See “Paper-pickup assembly,” on page 183 through “Main drive assembly” on page 186.
   - Power supply. See “Power supply” on page 188.
   - Tray 1 pickup assembly. See “Tray 1 paper-pickup assembly” on page 192.
2. Remove four screws (callout 1; right side). Remove the one e-ring retainer clip and gear (callout 2).

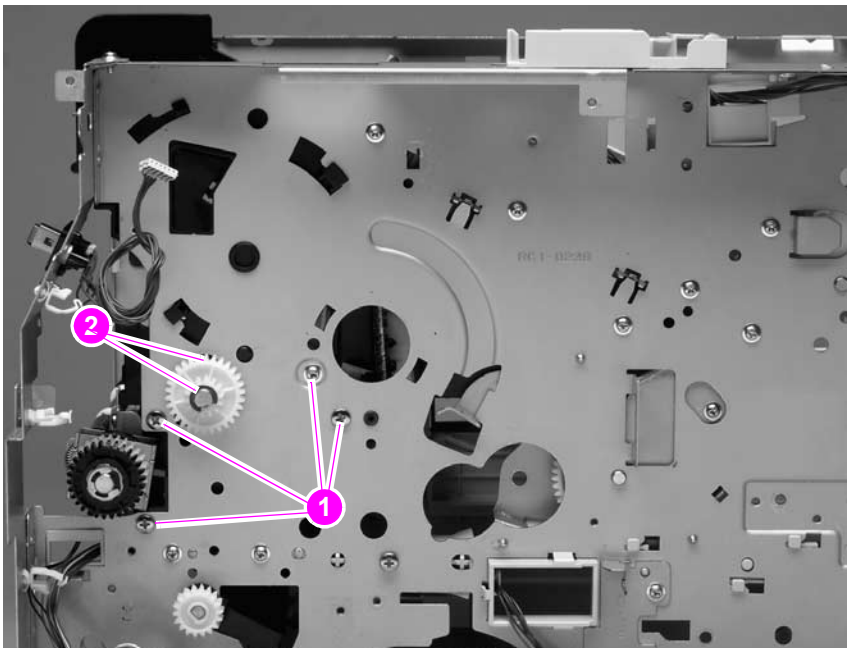

Figure 157. **Transfer assembly (1 of 5)**

Download Free Service Manual at http://printer1.blogspot.com

3. Remove the tray 2 left-side guide mounting screw (callout 3). Depress the tray 2 left-side guide locking tab (callout 4). Slide the guide out of the chassis to remove it.

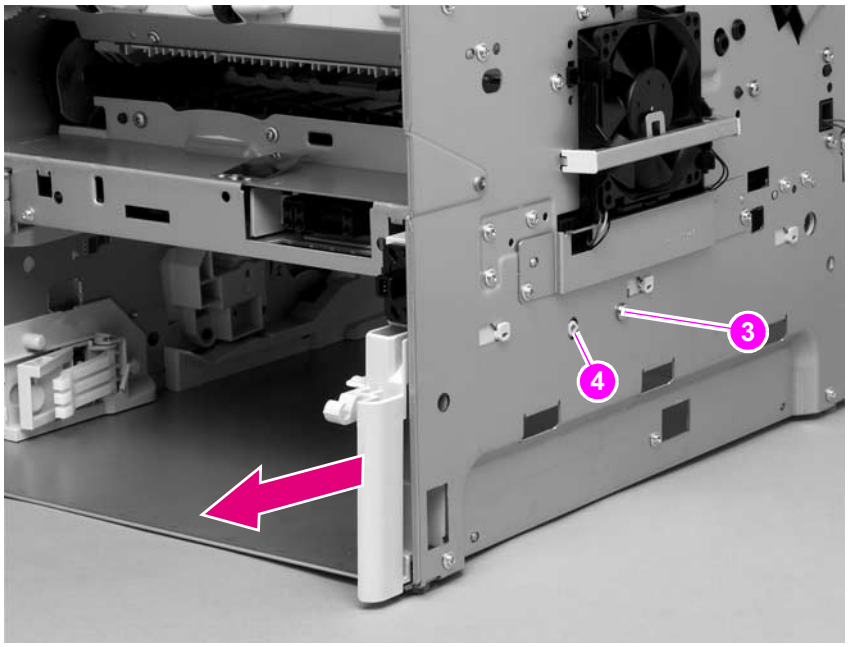

Figure 158. **Transfer assembly (left rear view; 2 of 5)**

Download Free Service Manual at http://printer1.blogspot.com

4. Push the paper-feed and transfer assembly wire-harnesses through the hole in the chassis (callout 5).

Reinstall note

The plastic clip (callout 5) that lines the hole in the chassis protects the wire-harnesses from chaffing on an exposed edge of the sheet-metal chassis. This clip can easily become dislodged and lost. Make sure that this clip is installed when you replace the transfer assembly.

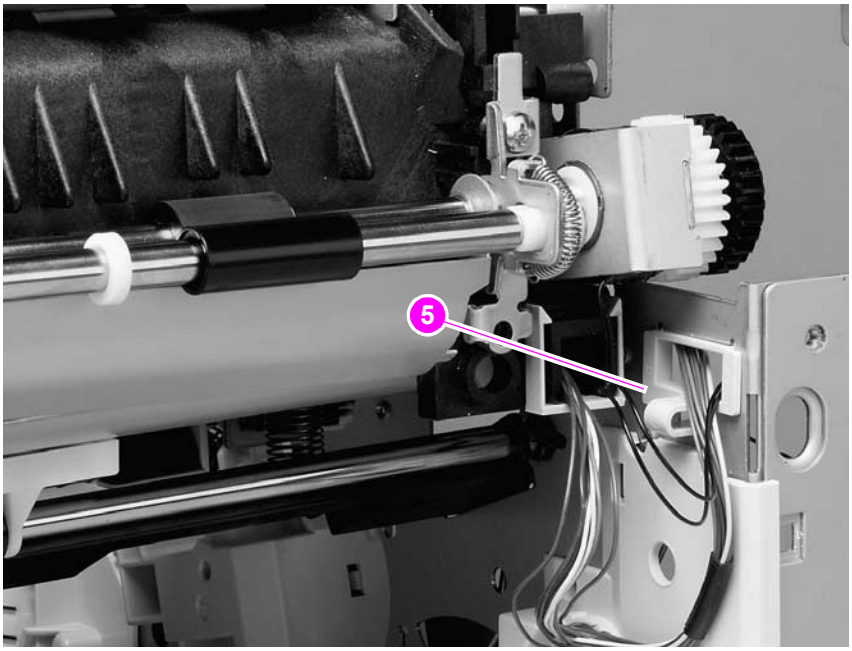

Figure 159. **Transfer assembly (3 of 5)**

5. On the left side, remove 16 screws (callout 6; 15 if the paper-feed assembly has been removed).

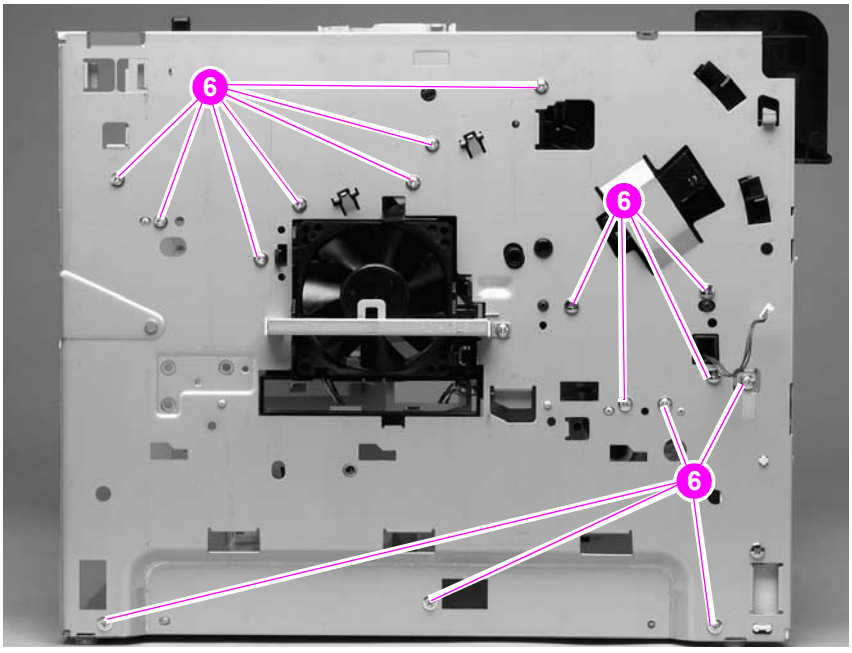

Figure 160. **Transfer assembly (4 of 5)**

Download Free Service Manual at http://printer1.blogspot.com

6. Support the transfer assembly and carefully separate the left side of the chassis from the laser/scanner shelf and the chassis bottom panel. Slide the transfer assembly away from the right side of the chassis and remove it.

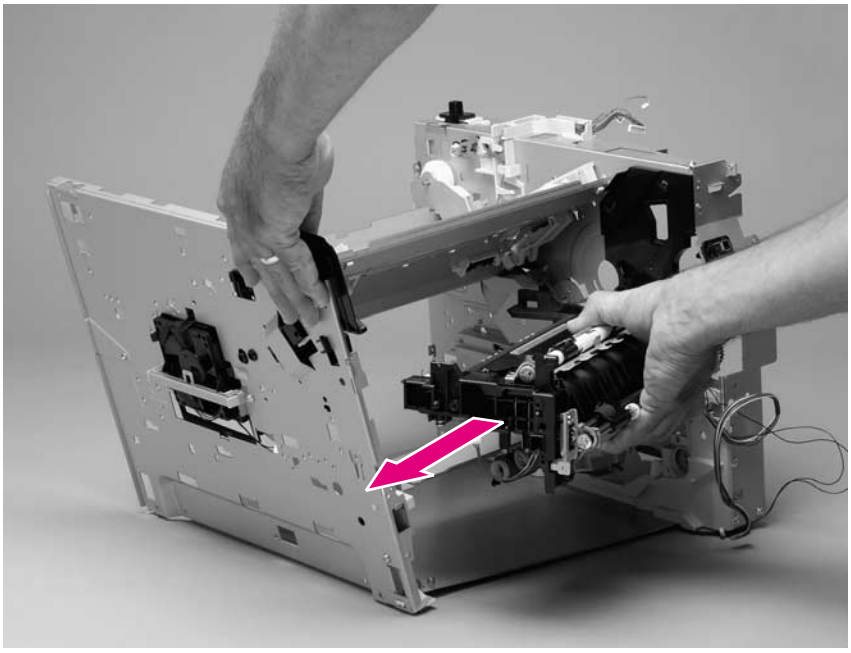

Figure 161. **Transfer assembly (5 of 5)**

Reinstall note

Feed the tray 1 pickup assembly wire-harness through the hole in the left side of the chassis, before installing the left side chassis.

The left-side chassis must be correctly aligned when it is installed. Verify that the alignment pins (callout 7) on the chassis tray, the alignment tabs and pin (callout 8) on the laser/scanner shelf, and the left-side middle-chassis alignment pins (callout 9) are correctly positioned in the corresponding holes in the left-side chassis. The paper-feed and transfer assembly must be correctly aligned when they are installed. Verify that the alignment pins (callout 10) are correctly positioned in the corresponding holes in the left-side chassis.

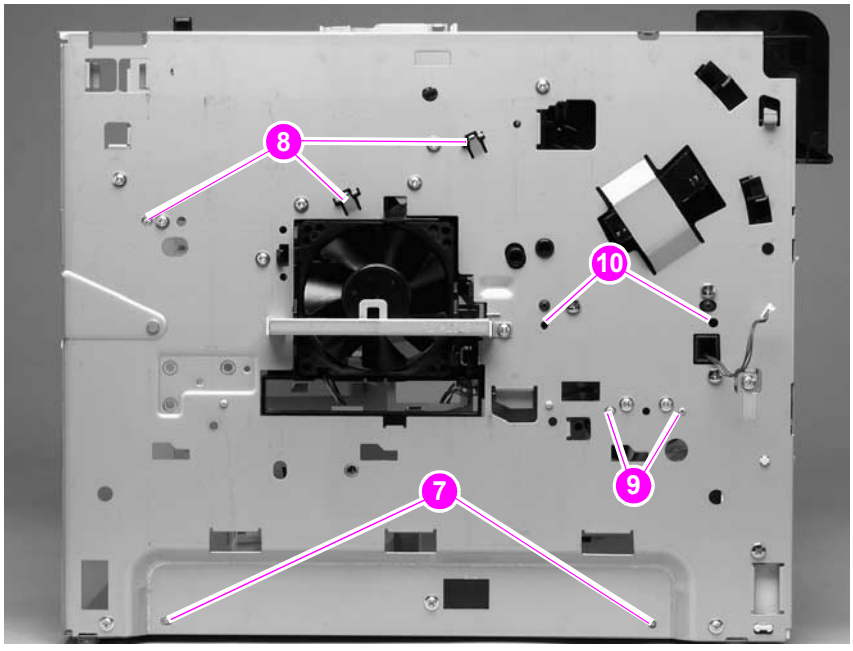

Figure 162. **Correct alignment of the left-side chassis**

Download Free Service Manual at http://printer1.blogspot.com

500-sheet feeder assembly

500-sheet feed rollers

Note The removal procedure for the two paper-feed rollers located up inside of the 500-sheet feeder is the same as the procedure for the tray 2 feed rollers. See "Tray 2 feed rollers" on page 141.

500-sheet feeder right-side cover

1. Remove two screws (callout 1) and the front cover (callout 2).

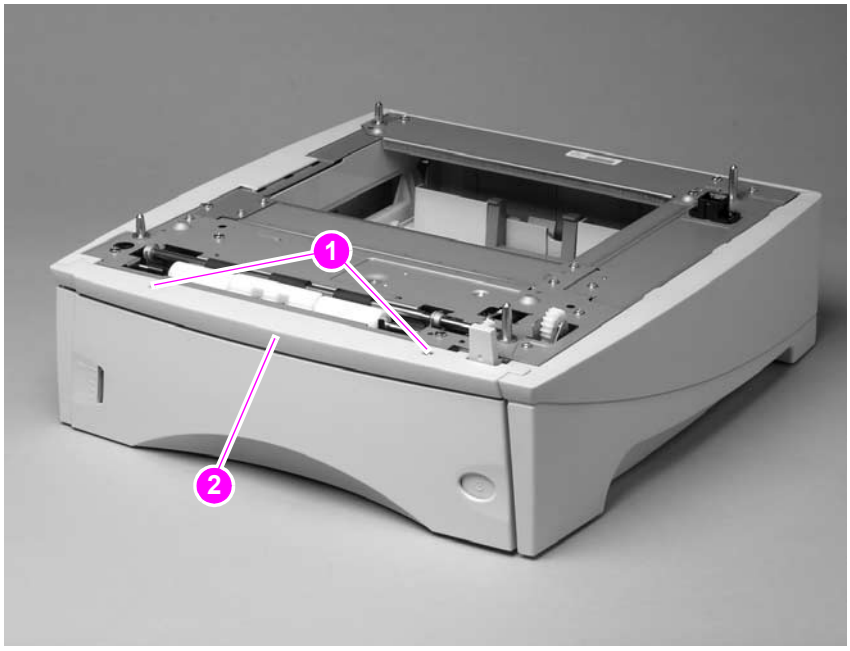

Figure 163. **500-sheet feeder right-side cover (1 of 5)**

Download Free Service Manual at http://printer1.blogspot.com

2. Use a flat-blade screwdriver to release the right-side cover front locking tab.

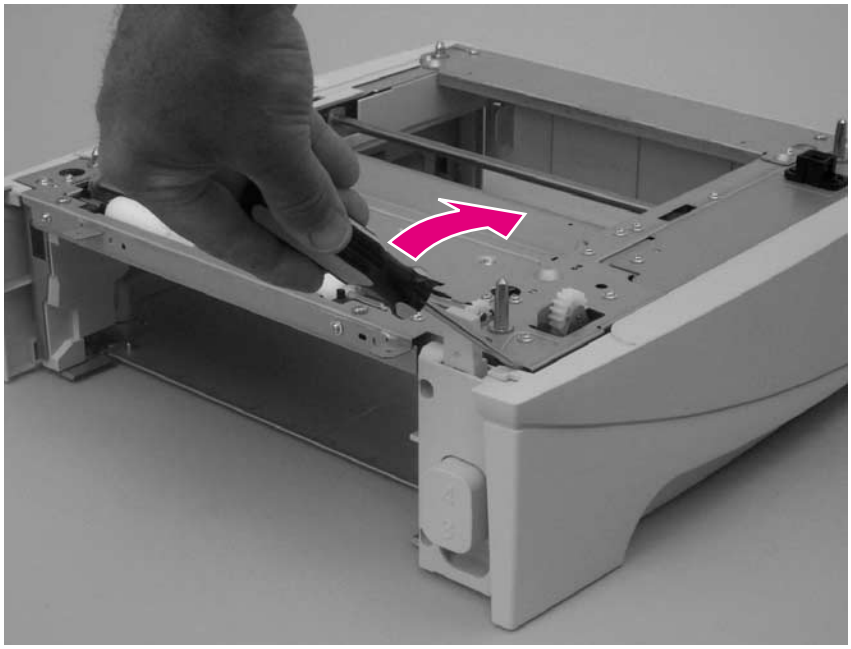

Figure 164. **500-sheet feeder right-side cover (2 of 5)**

3. Depress the edge of the cover and release the three center locking tabs.

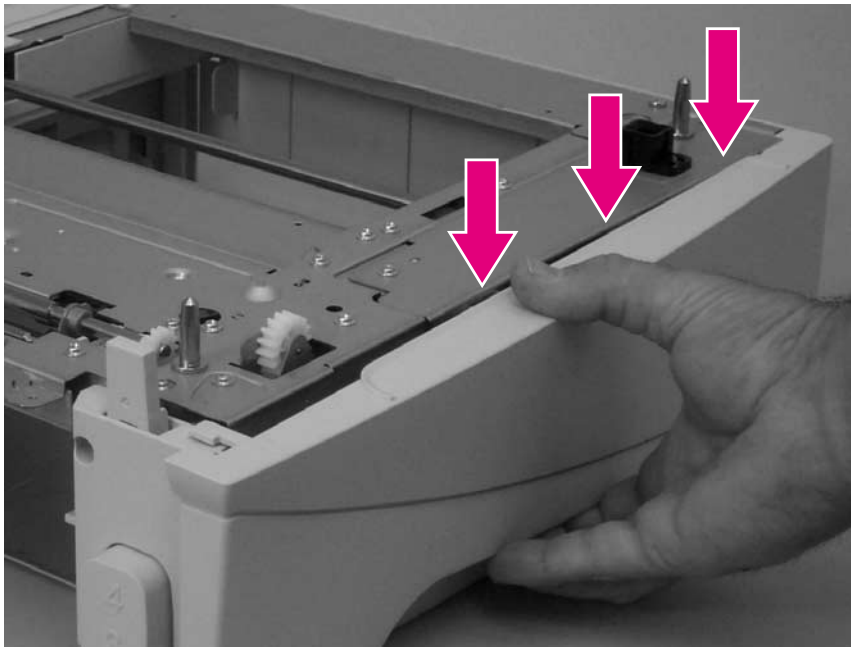

Figure 165. **500-sheet feeder right-side cover (3 of 5)**

Download Free Service Manual at http://printer1.blogspot.com

4. Use flat-blade screwdriver to release the rear locking tab.

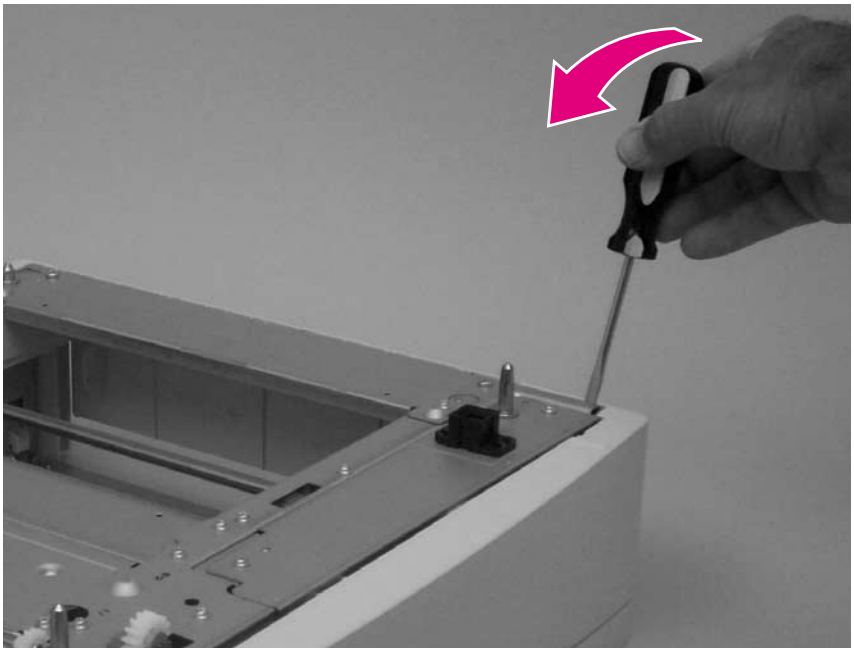

Figure 166. **500-sheet feeder right-side cover (4 of 5)**

5. Rotate the top of the cover away from the tray assembly and lift it up to remove it.

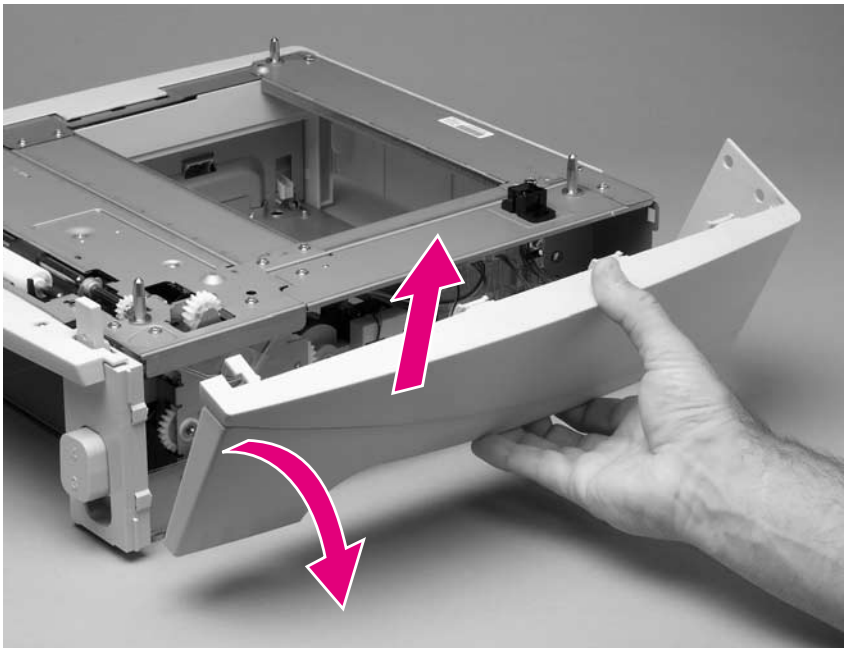

Figure 167. **500-sheet feeder right-side cover (5 of 5)**

Download Free Service Manual at http://printer1.blogspot.com

500-sheet feeder control PCA

CAUTION The product contains components that are sensitive to electrostatic discharge (ESD). Always perform service work at an ESD-protected workstation. If an ESD-protected workstation is not available, discharge body static by grasping the 500-sheet feeder chassis before touching an ESD-sensitive component. Ground the 500-sheet feeder chassis *before* servicing the product.

1. Remove the 500-sheet feeder right-side cover. See "500-sheet feeder right-side cover" on page 204.
2. Unplug six wire-harness connectors (callout 1).
3. Remove two screws (callout 2).
4. Remove the PCA.

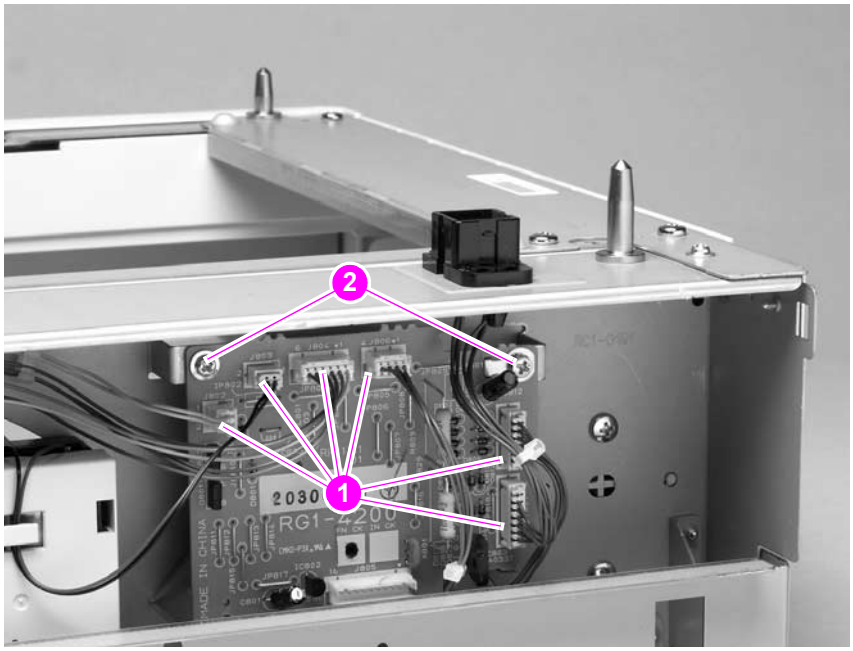

Figure 168. **500-sheet feeder control PCA**

Download Free Service Manual at http://printer1.blogspot.com

500-sheet feeder media-size sensor

1. Remove the 500-sheet feeder PCA. See "500-sheet feeder control PCA" on page 207.
2. Remove two screws (callout 1).

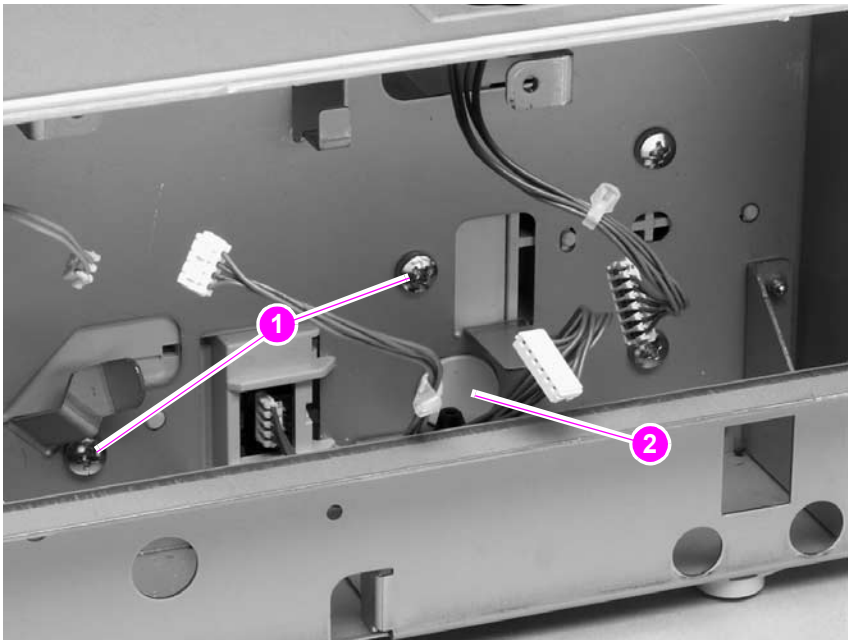

Figure 169. **500-sheet feeder media-size sensor (1 of 2)**

3. Push the locking tab (figure 169; callout 2) and slide the sensor toward the front of the feeder to release it. Remove the sensor.

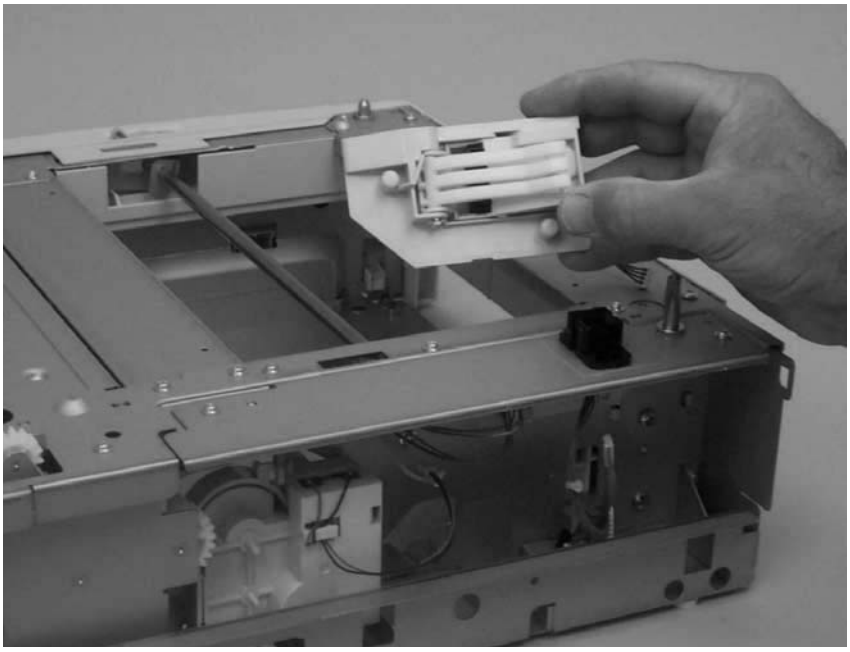

Figure 170. **500-sheet feeder media-size sensor (2 of 2)**

Reinstall note When you install the media sensor, verify that the locator pins are correctly positioned in the corresponding holes in the chassis.

Download Free Service Manual at http://printer1.blogspot.com

500-sheet feeder lifter-drive assembly

1. Remove the 500-sheet feeder right-side cover. See “500-sheet feeder right-side cover” on page 204.
2. Unplug the lifter-drive harness connector from the assembly PCA (location J803; callout 1). Disconnect the tension spring (callout 2) and remove one screw (callout 3).

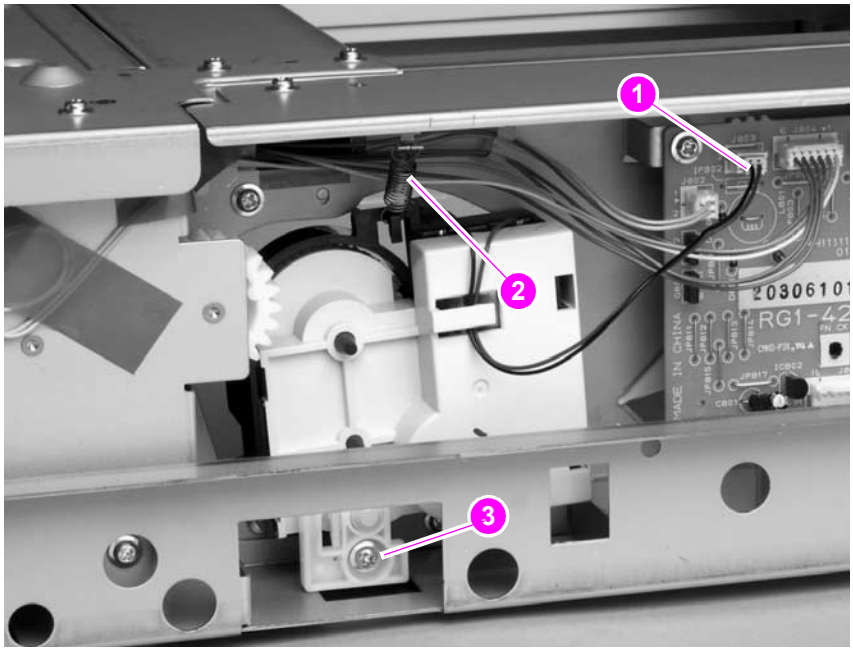

Figure 171. **500-sheet feeder lifter-drive assembly (1 of 2)**

3. Pull the tray lifter-drive assembly out towards the right side of the chassis until its pivot shaft clears the tray guide. Rotate the lifter-drive assembly up and out of the chassis to remove it.

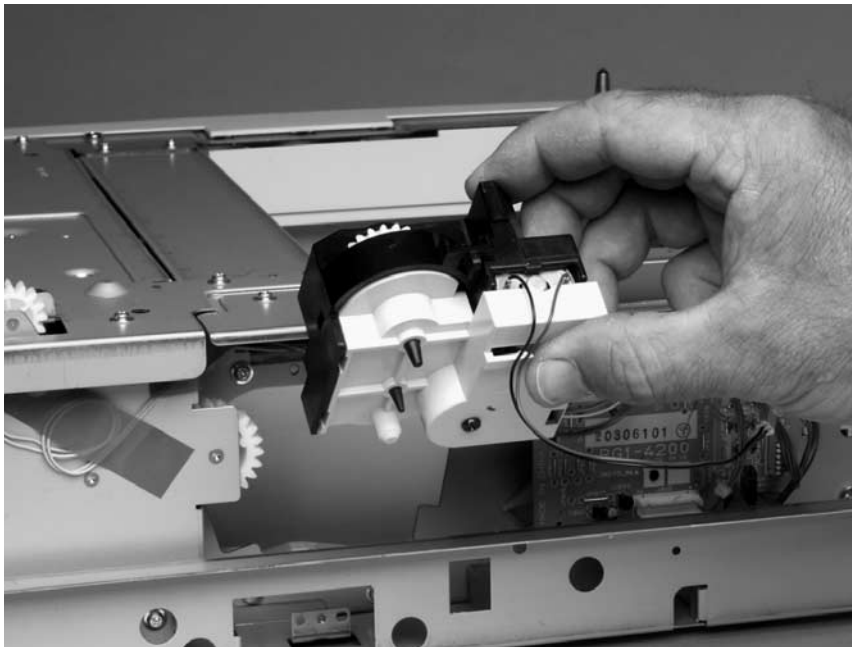

Figure 172. **500-sheet feeder lifter-drive assembly (2 of 2)**

Download Free Service Manual at http://printer1.blogspot.com

500-sheet feeder paper-pickup drive assembly

1. Remove the following assemblies:
   - 500-sheet feeder right-side cover. See “500-sheet feeder right-side cover” on page 204.
   - 500-sheet feeder tray lifter-drive assembly. See “500-sheet feeder lifter-drive assembly” on page 209.
2. Unplug the main drive solenoid harness connector (callout 1) from the CA (location J802). Remove the harness from the harness clip (callout 2).

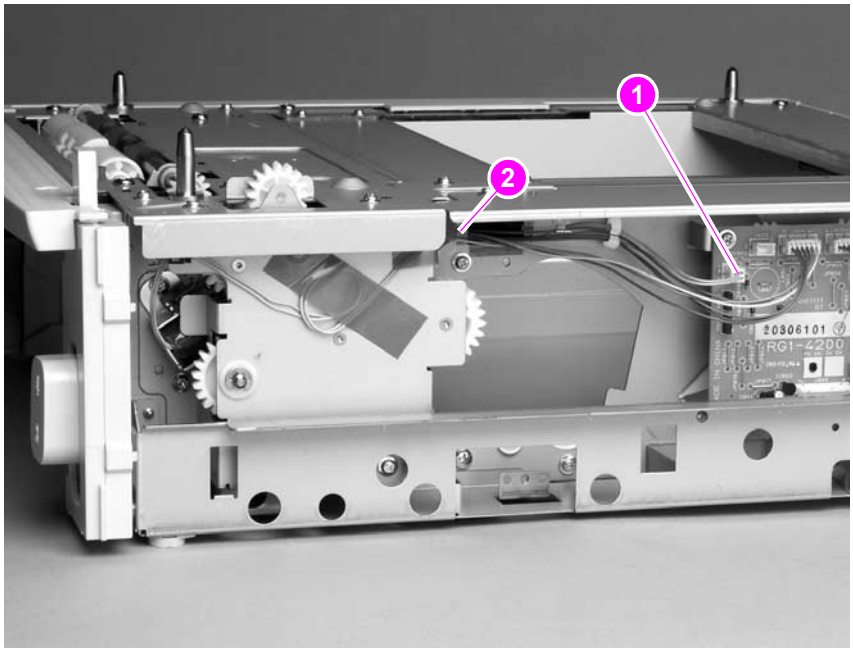

Figure 173. **500-sheet feeder paper-pickup drive assembly (1 of 7)**

3. Remove two screws (callout 3). Remove the tray-number indicator.

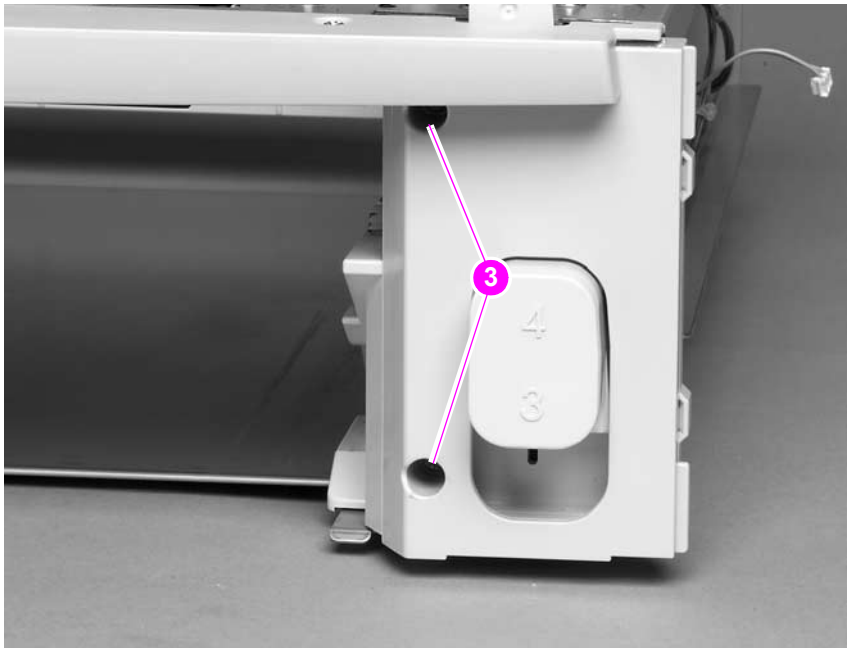

Figure 174. **500-sheet feeder paper-pickup drive assembly (2 of 7)**

Download Free Service Manual at http://printer1.blogspot.com

4. Unplug the accessory-connector wire-harness from the PCA (callout 4).

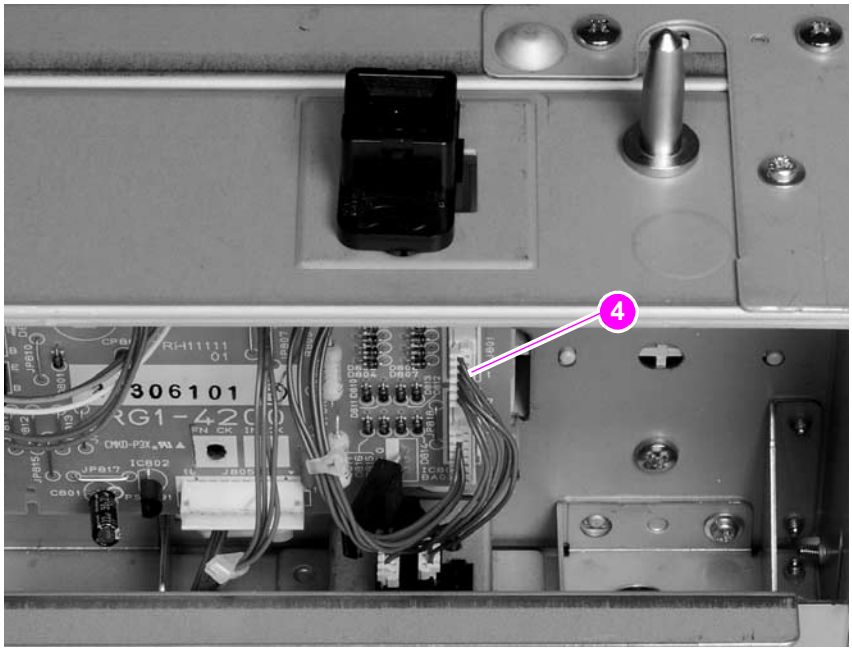

Figure 175. **500-sheet feeder paper-pickup drive assembly (3 of 7)**

5. Remove 8 screws (callouts 5, 6, and 7). Remove the chassis gutter (callout 8).

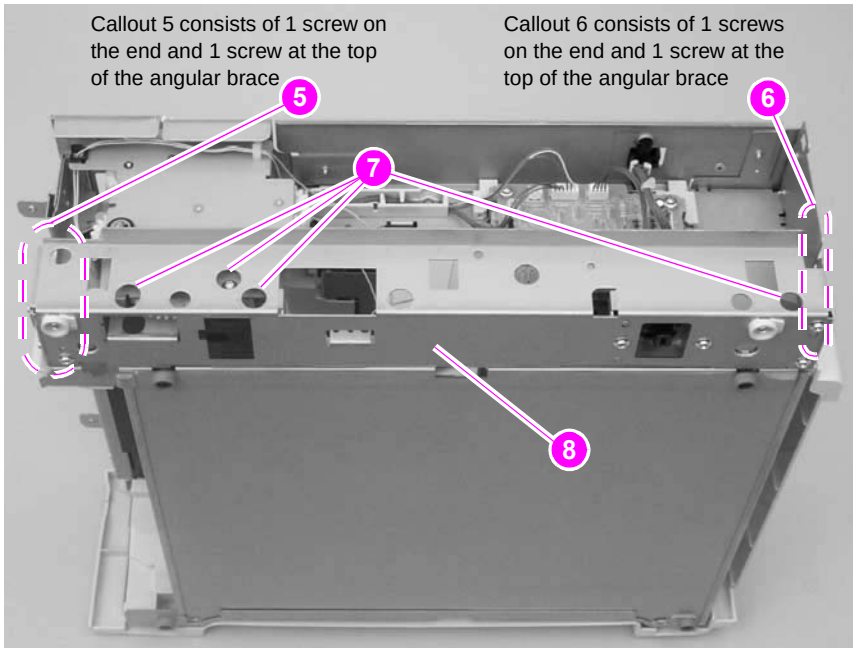

Figure 176. **500-sheet feeder paper-pickup drive assembly (4 of 7)**

Download Free Service Manual at http://printer1.blogspot.com

6. Remove one e-clip and the shaft collar (callout 9).

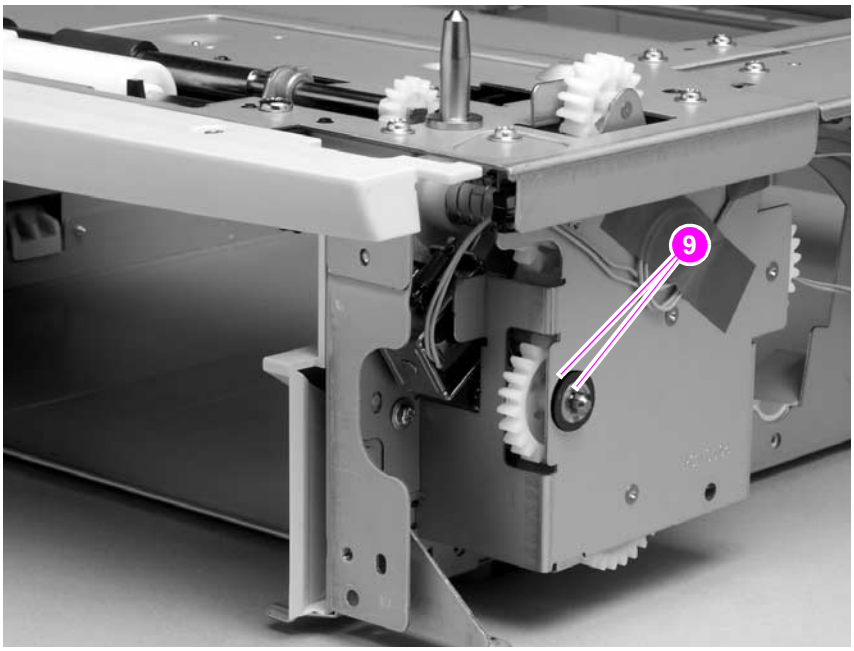

Figure 177. **500-sheet feeder paper-pickup drive assembly (5 of 7)**

7. Push the shaft into the paper-pickup drive assembly. Grasp the tray drive gear inside the tray cavity and pull the gear/shaft assembly out of the paper-pickup gear assembly.

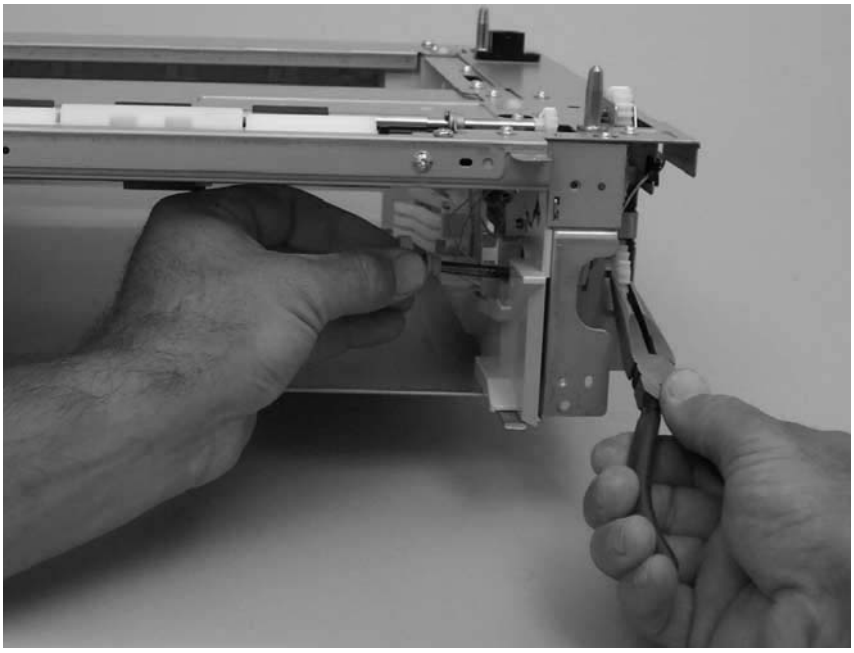

Figure 178. **500-sheet feeder paper-pickup drive gear assembly (6 of 7)**

Download Free Service Manual at http://printer1.blogspot.com

CAUTION Some gears are not captive when the paper-pickup assembly is removed. They can easily slide off of the shafts and be lost. Also, the solenoid is not captive when the paper-pickup assembly is removed.

8. Remove five screws (callout 10). Pull the paper-pickup gear assembly away from the chassis and remove it.

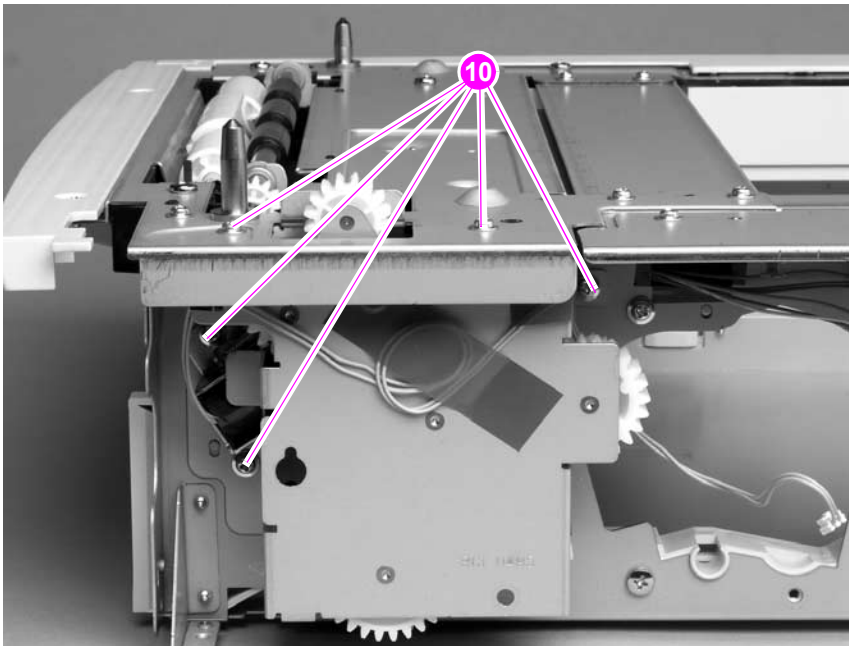

Figure 179. **500-sheet feeder paper-pickup drive assembly (7 of 7)**

Reinstall note When you install the tray drive gears and shaft, verify that the gears are seated on the shaft locking bars and that the shaft collars are positioned correctly in the lower gear assembly mounting bracket and 500-sheet feeder chassis.

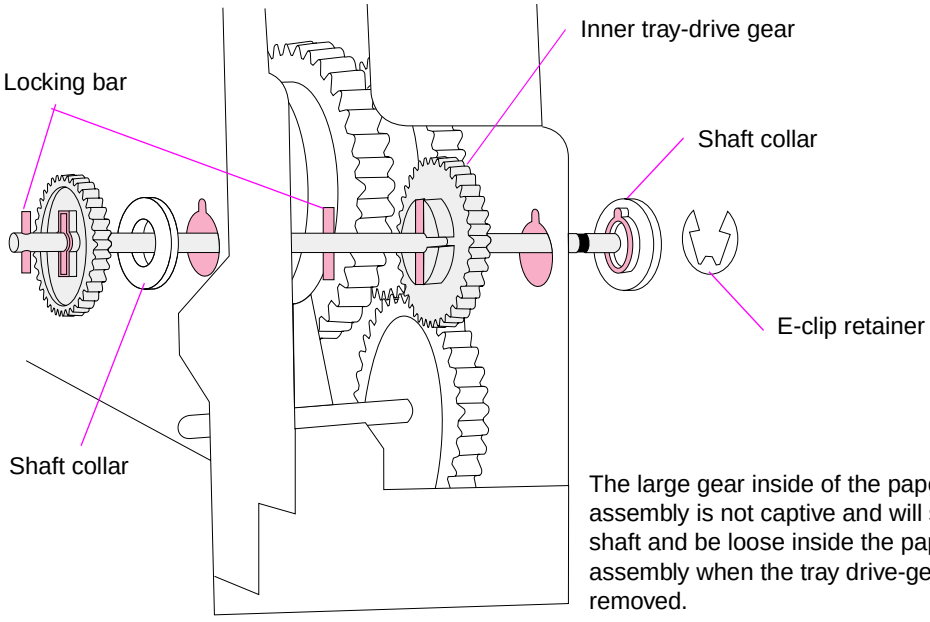

Figure 180. **500-sheet feeder paper-pickup drive gear**

Download Free Service Manual at http://printer1.blogspot.com

1,500-sheet feeder assembly

1,500-sheet feeder feed rollers

Note The removal procedure for the two paper-feed rollers that are located up inside of the 1,500-sheet feeder is the same as the procedure for the tray 2 feed rollers. See "Tray 2 feed rollers" on page 141.

1,500-sheet feeder separation roller

1. Open the 1,500-sheet feeder door. Open the feed roller cover.

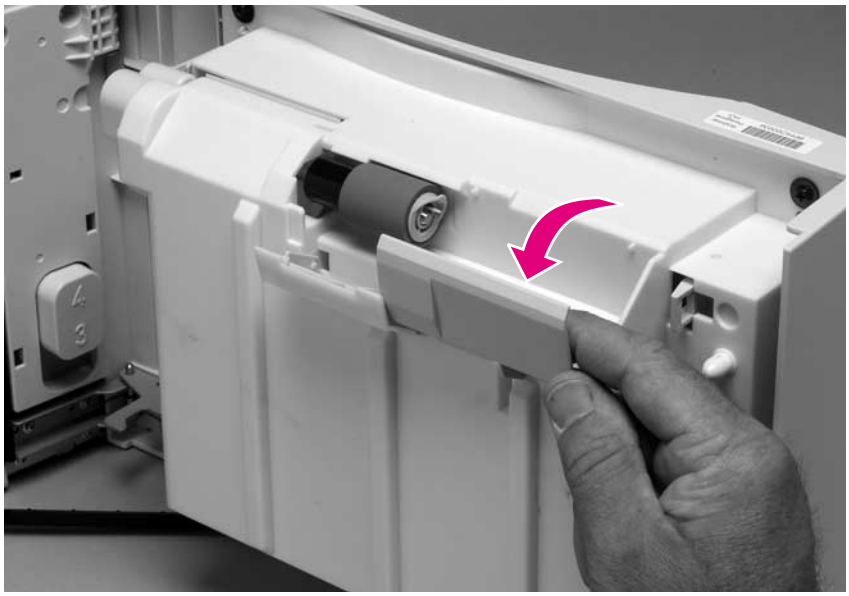

Figure 181. **1,500-sheet feeder roller (1 of 2)**

2. Pinch the blue latch that is on the side of the feed roller and slide the roller off of the shaft.

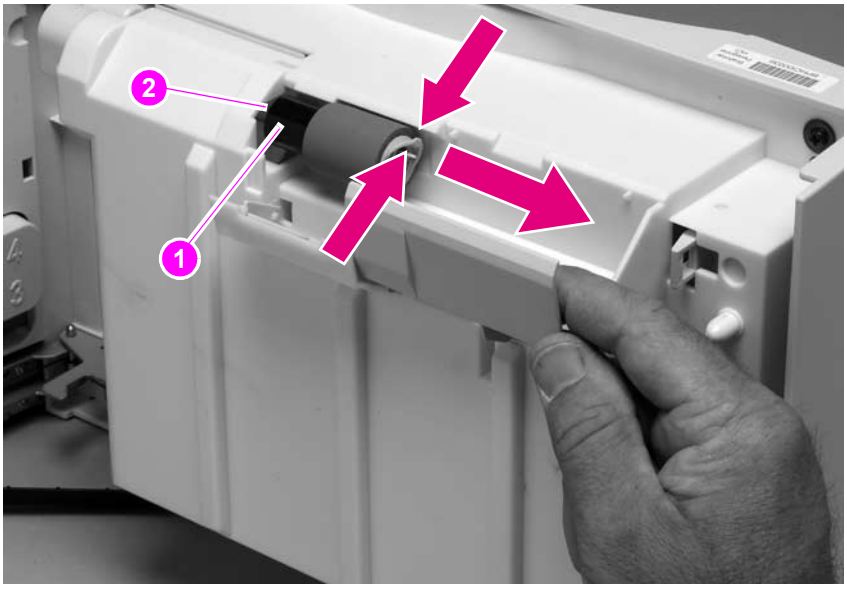

Figure 182. **1,500-sheet feeder roller (2 of 2)**

Reinstall note This roller must lock into place. Verify that the roller is seated on the locking bars that are located on the round black spacer and that the spacer is seated on the shaft-locking pin (callout 1 & 2).

Download Free Service Manual at http://printer1.blogspot.com

1,500-sheet feeder door

1. Remove one screw (callout 1) and remove the door-stop plate (callout 2).

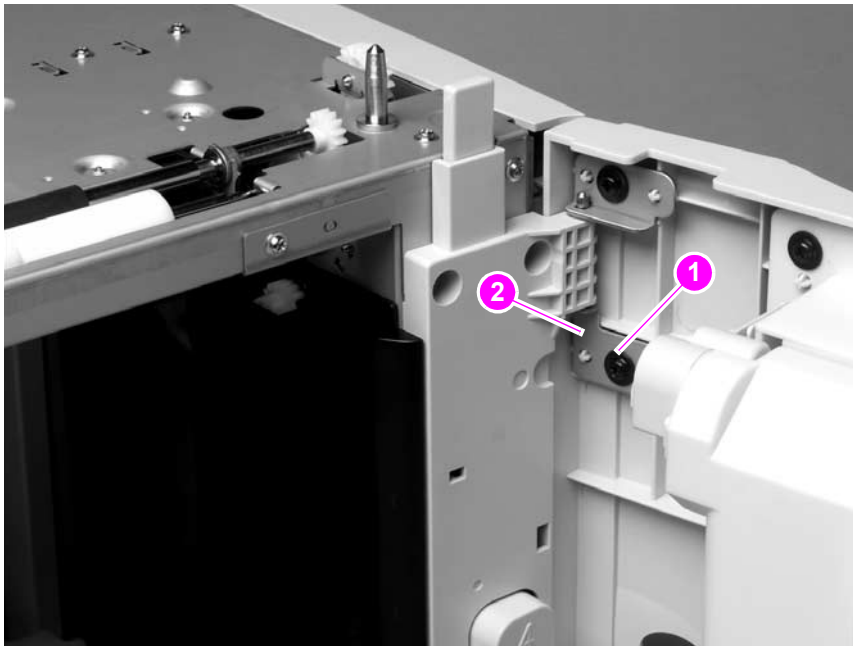

Figure 183. **1,500-sheet feeder door (1 of 3)**

2. Open the 1,500-sheet feeder door about halfway. Gently pry open the door slide-bar slot and disengage the door slide-bar from the feeder.

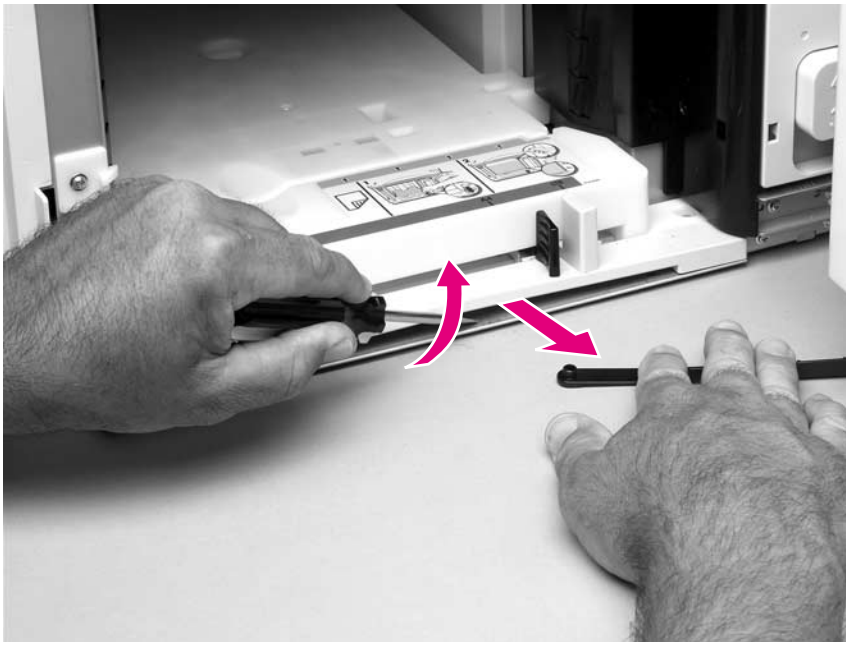

Figure 184. **1,500-sheet feeder door (2 of 3)**

Download Free Service Manual at http://printer1.blogspot.com

3. Lift the door straight up and off of the door hinge pins.

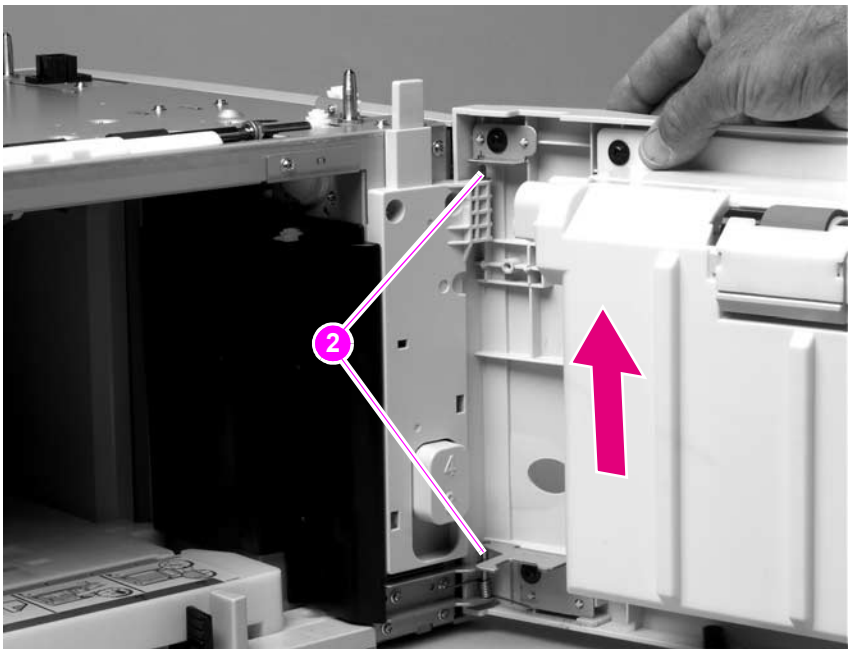

Figure 185. **1,500-sheet feeder door (3 of 3)**

Hint The door hinge pins are not captive when the door is removed. If the feeder must be turned on its side or placed upside down, remove the hinge pins and the door spring (callout 2). Place the pins and the spring where you will not lose them.

Download Free Service Manual at http://printer1.blogspot.com

1,500-sheet feeder rear cover

1. Locate the upper rear-cover locking tabs (callout 1) on each side of the rear cover (they are marked with arrows; callout 2). Use a flat-blade screwdriver to release these tabs.

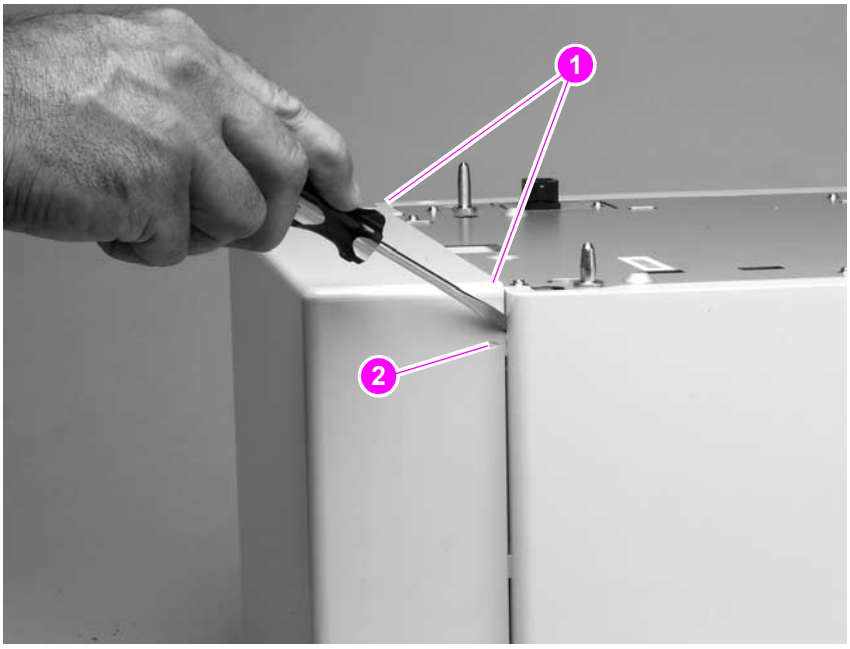

Figure 186. **1,500-sheet feeder rear cover (1 of 2)**

2. Rotate the top of the cover away from the feeder. Lift up on the cover to release it.

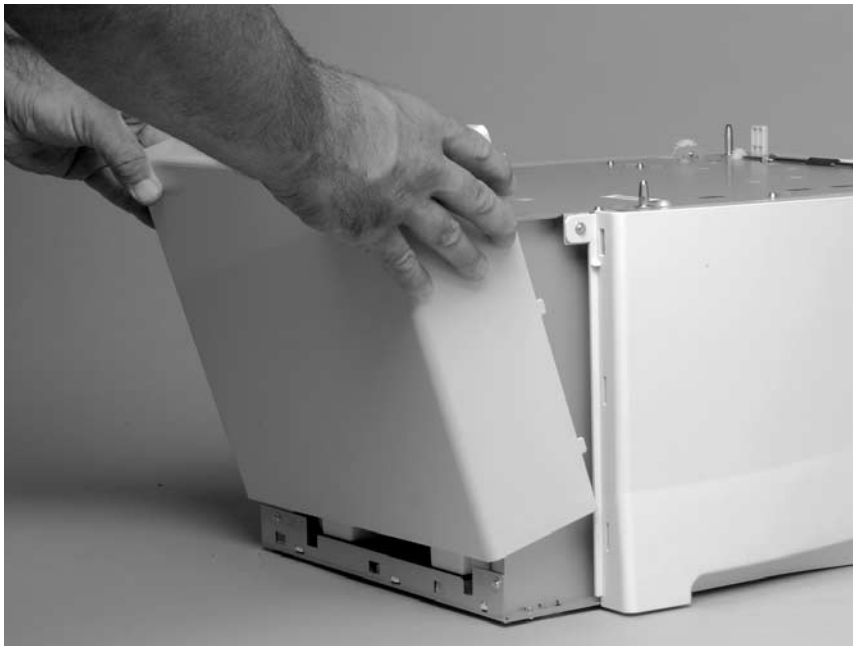

Figure 187. **1,500-sheet feeder rear cover (2 of 2)**

Download Free Service Manual at http://printer1.blogspot.com

1,500-sheet feeder right-side cover

1. Remove the following assemblies:
   - Door. See “1,500-sheet feeder door” on page 215.
   - Rear cover. See “1,500-sheet feeder rear cover” on page 217.
2. Remove one screw (callout 1).

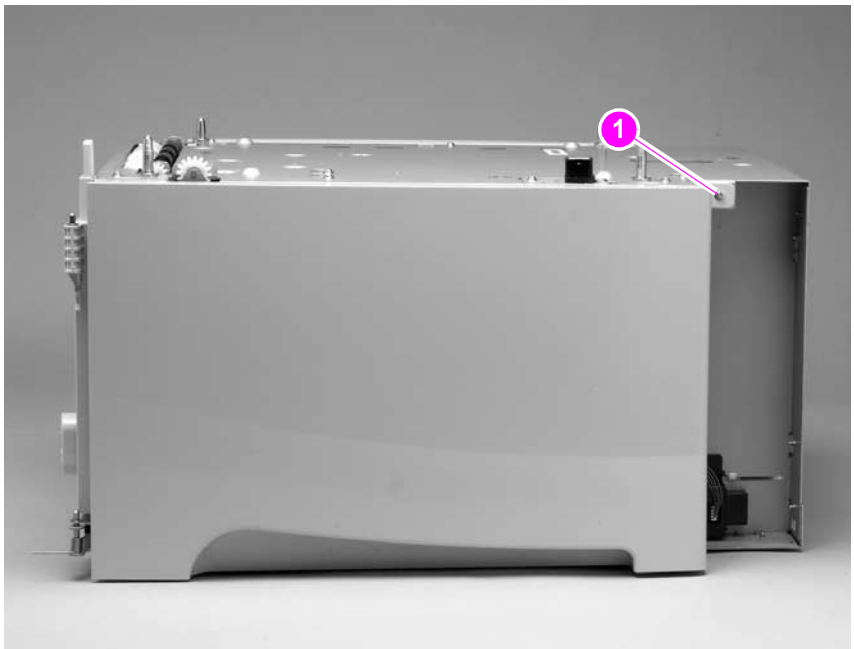

Figure 188. **1,500-sheet feeder right-side cover (1 of 3)**

3. Use a flat-blade screwdriver to release the cover-locking tab (door hinge side; callout 2)

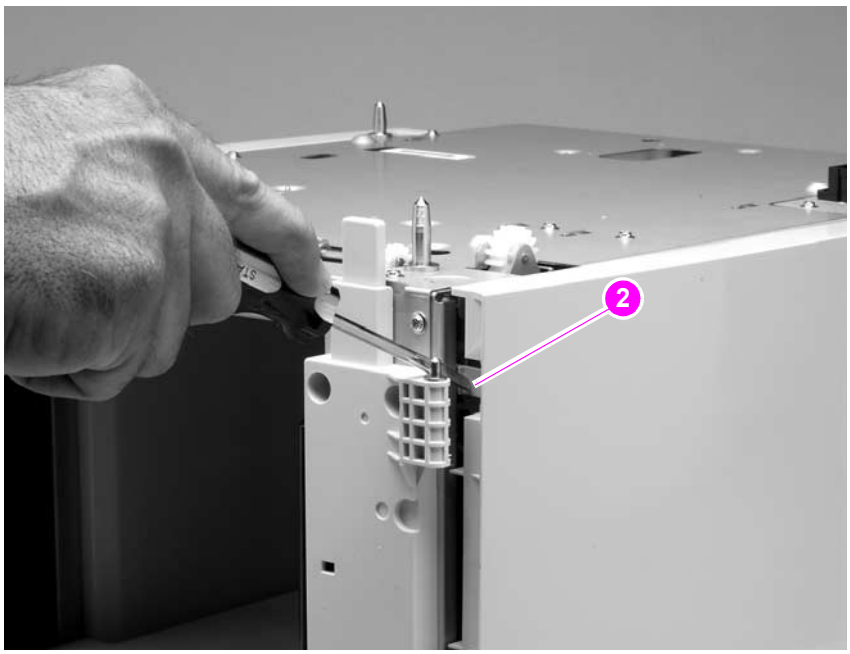

Figure 189. **1,500-sheet feeder right-side cover (2 of 3)**

Download Free Service Manual at http://printer1.blogspot.com

4. Rotate the top of the cover away from the chassis and then lift it up and remove it.

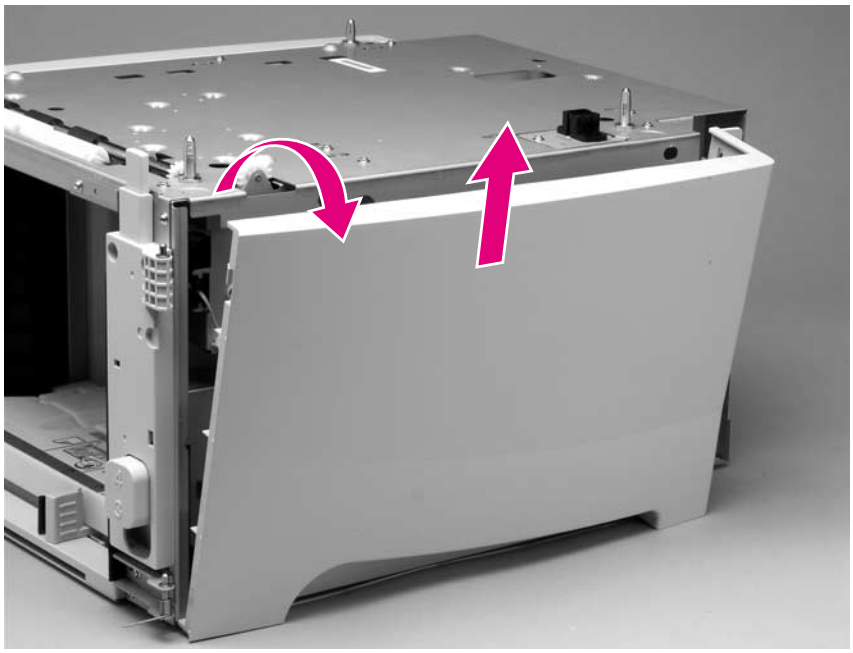

Figure 190. **1,500-sheet feeder right-side cover (3 of 3)**

Download Free Service Manual at http://printer1.blogspot.com

1,500-sheet feeder control PCA

1. Remove the following assemblies
   - Door. See “1,500-sheet feeder door” on page 215.
   - Rear and right-side covers. See “1,500-sheet feeder rear cover” on page 217 and “1,500-sheet feeder right-side cover” on page 218.
2. Unplug six wire-harness connectors (callout 1).

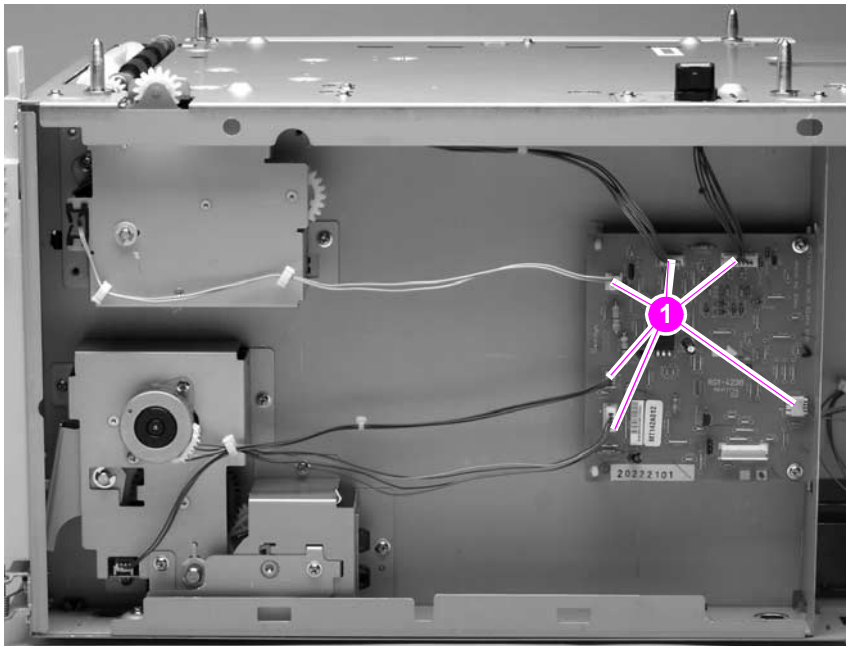

Figure 191. **1,500-sheet feeder control PCA (1 of 2)**

3. Remove two screws (callout 2). Use a pair of needle-nose pliers to squeeze the top of one of the nylon PCA tabs (callout 3). Gently pop the PCA off of the tab. Repeat the procedure on the remaining tab. Remove the PCA.

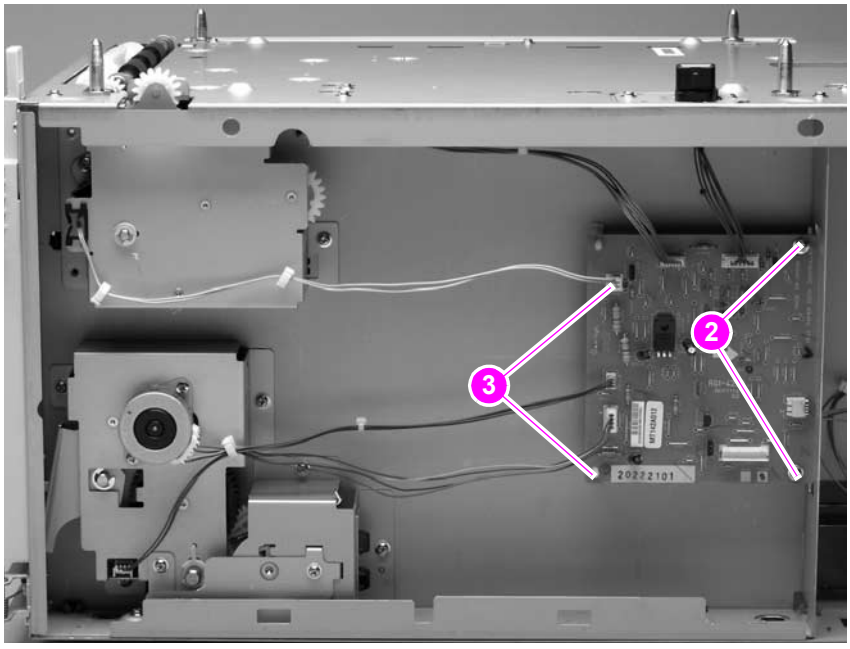

Figure 192. **1,500-sheet feeder control PCA (2 of 2)**

Download Free Service Manual at http://printer1.blogspot.com

1,500-sheet feeder media-size sensor

1. Remove the following assemblies:
   - Door. See “1,500-sheet feeder door” on page 215.
   - Rear and right-side covers. See “1,500-sheet feeder rear cover” on page 217 and “1,500-sheet feeder right-side cover” on page 218.
2. Unplug the sensor wire-harness at the sensor (callout 1).
3. Remove one screw (callout 2).
4. Remove the sensor.

CAUTION There are two plastic locator pins on the back of the sensor. Be careful not to break them when the sensor is removed.

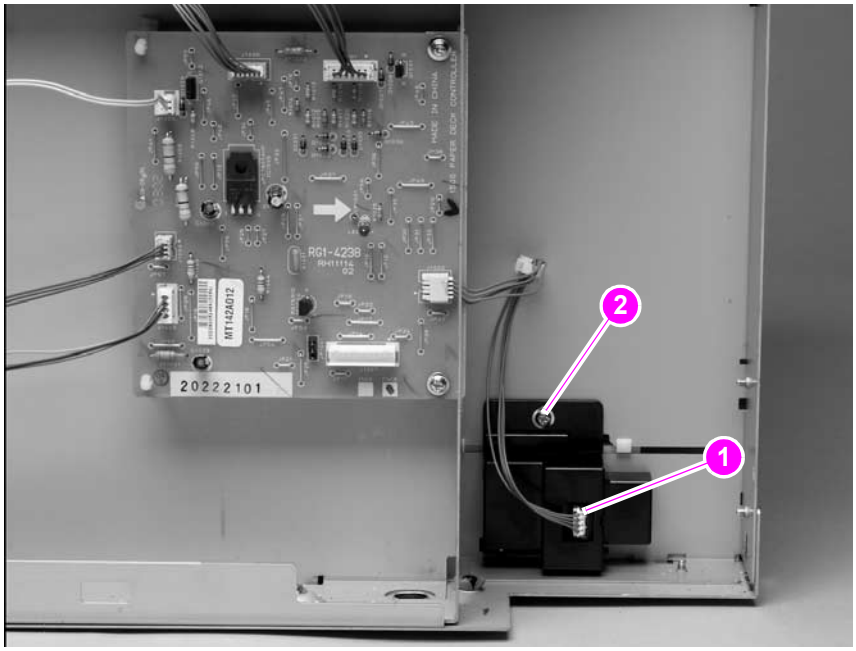

Figure 193. **1,500-sheet feeder media-size sensor**

Reinstall note When you install the sensor, verify that the sensor body is flush with the chassis.

Download Free Service Manual at http://printer1.blogspot.com

1,500-sheet feeder lifter-drive assembly

1. Remove the following assemblies:
   - Door. See “1,500-sheet feeder door” on page 215.
   - Rear and right-side covers. See “1,500-sheet feeder rear cover” on page 217 and “1,500-sheet feeder right-side cover” on page 218.
2. Unplug the lifter-drive harness connector from the PCA (location J1003; callout 1).
3. Unplug the lifter-drive sensor harness from the sensor (callout 2) and remove the sensor harness from the wire clip (callout 3).

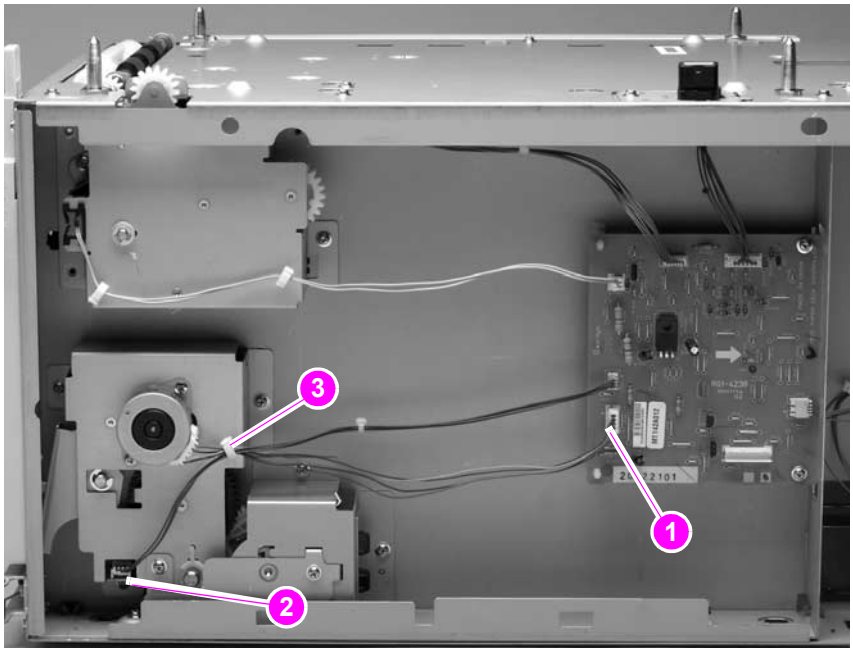

Figure 194. **1,500-sheet feeder lifter-drive assembly (1 of 4)**

Download Free Service Manual at http://printer1.blogspot.com

4. Remove seven screws (callout 4) and then remove the bracket (callout 5).
5. Slide the spring-gear assembly (callout 6) away from the chassis until the gear shaft clears the hole in the chassis. Slide the assembly towards the rear of the feeder and then remove it.

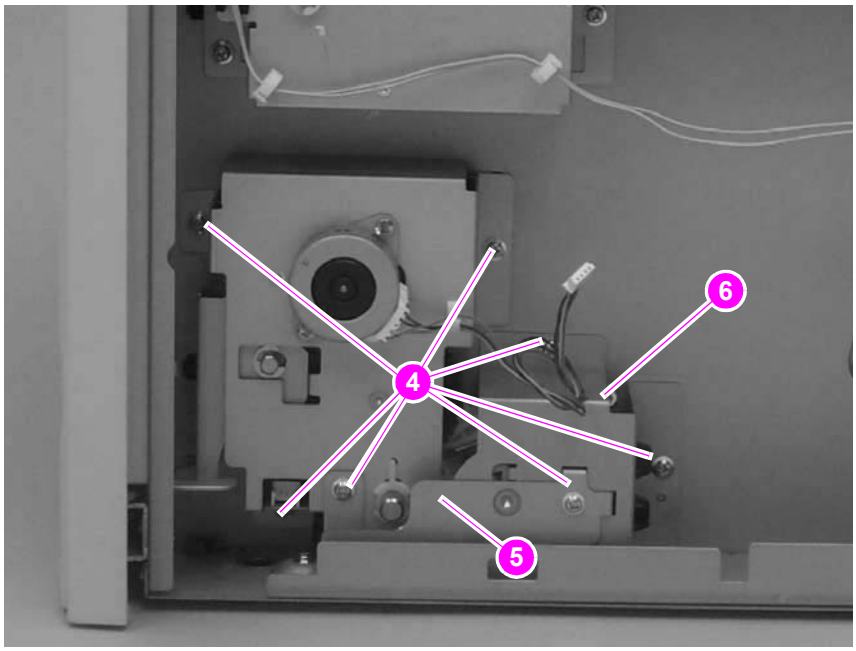

Figure 195. **1,500-sheet feeder lifter-drive assembly (2 of 4)**

6. Release the lifter-gear shaft-collar locking pin and rotate the collar until the inner locking tabs align with the corresponding holes in the bracket. Slide the collar off of the shaft.

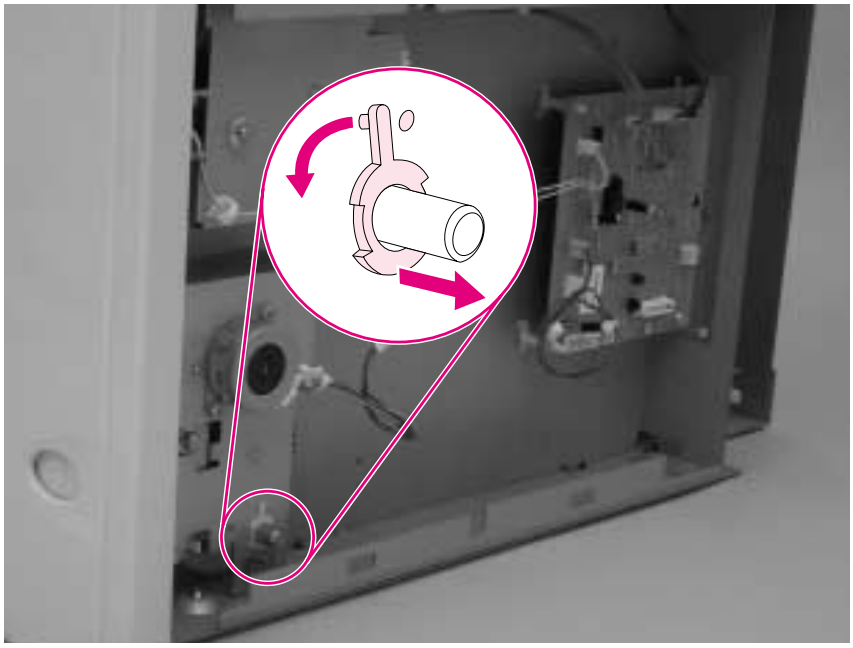

Figure 196. **1,500-sheet feeder lifter-drive assembly (3 of 4)**

Download Free Service Manual at http://printer1.blogspot.com

7. Slide the lifter-drive assembly away from the chassis until the lifter-drive gear-shaft clears the corresponding hole in the bracket. Remove the assembly.

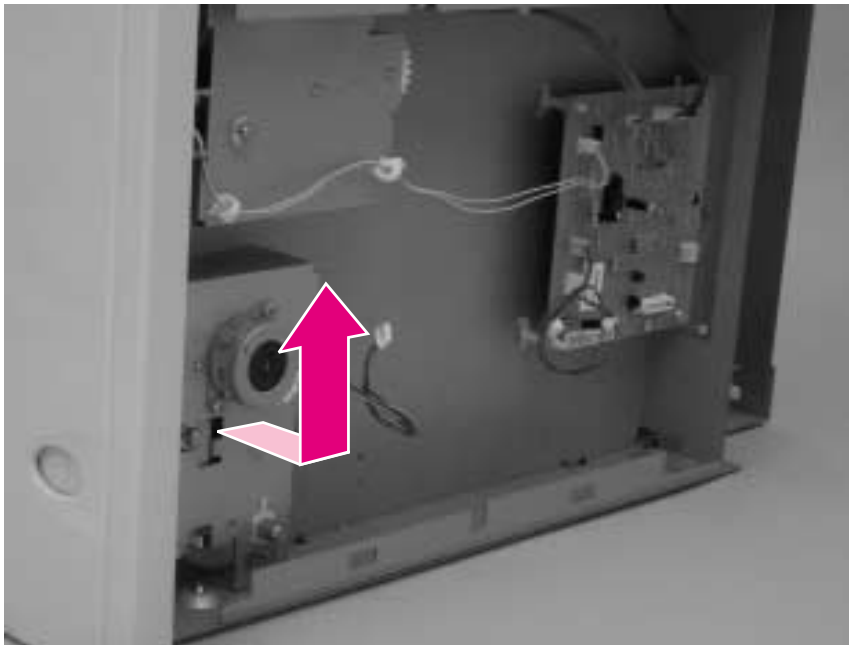

Figure 197. **1,500-sheet feeder lifter-drive assembly (4 of 4)**

Download Free Service Manual at http://printer1.blogspot.com

1,500-sheet feeder paper-pickup drive assembly

1. Remove the following assemblies:
   - Door. See “1,500-sheet feeder door” on page 215.
   - Rear and right-side covers. See “1,500-sheet feeder rear cover” on page 217 and “1,500-sheet feeder right-side cover” on page 218.
2. Unplug the paper-pickup drive-solenoid harness connector from the assembly PCA (location J1005; callout 1). Remove four screws (callout 2).
3. Reach inside the 1,500-sheet feeder and push the rear feed roller up into its raised position (this will disengage the roller lifting arm from the clutch gear).
4. Remove the paper-pickup drive assembly.

Note The top gear (callout 3) is not captive when the paper-pickup gear assembly is removed. It can easily slide off of the shaft and be lost.

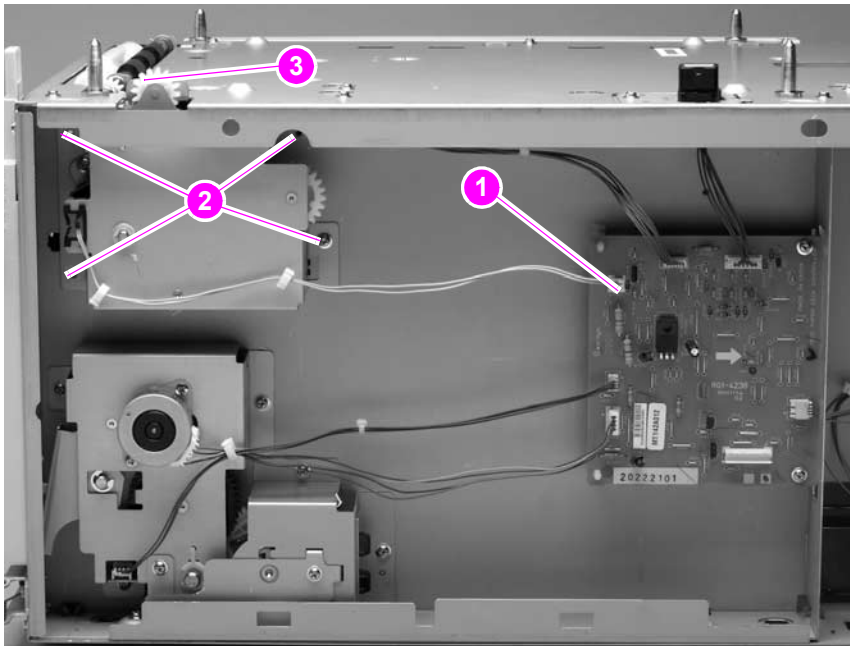

Figure 198. **1,500-sheet feeder paper-pickup drive assembly**

Reinstall note When you install the paper-pickup drive assembly, reach up inside the 1,500-sheet feeder and push the rear feeder roller up into its raised position. Position the paper-pickup drive assembly onto the chassis (it should sit flush against the chassis) and then lower the roller into its resting position. This ensures that the feeder lever correctly rests on the clutched gear in the paper-pickup drive assembly.

Download Free Service Manual at http://printer1.blogspot.com

Download Free Service Manual at http://printer1.blogspot.com

7 Troubleshooting

Contents

Introduction 230
Troubleshooting process 231
Initial troubleshooting checklist 232
Troubleshooting flowchart 234
Power-on checks 236
Overview 236
Troubleshooting tools 239
Information pages 239
Menu map 240
Configuration page 241
Supplies status page 242
Embedded Web server 243
Gaining access to the embedded Web server 243
Information tab 244
Settings tab 244
Networking tab 244
Other links 245
Printer Status and Alerts software 245
To select status messages 246
To view status messages and information 246
Control-panel menus 247
Using control-panel menus 247
Resets submenu 247
Diagnostics menu 248
Service menu (service PIN codes) 249
Service ID 250
Restoring the Service ID 250
Converting the Service ID to an actual date 250
Printer resets and power-on modes 251
Cold reset 251
To perform a cold reset 251
NVRAM initialization 251
To initialize NVRAM 251
Hard-disk initialization 252
To initialize the hard disk 252
Power-on bypass 252
Skip disk load 252
Self test 253
Test pages 254
Engine test page 254
Formatter test page 254
Interface troubleshooting 255
Communications checks 255
EIO troubleshooting 255
Computer direct connect (parallel) test 255

Download Free Service Manual at http://printer1.blogspot.com

Display-message troubleshooting 257
Status messages 257
Warning messages 257
Error messages 257
Critical-error messages 257
Alphabetical printer messages 258
Numerical printer messages 274
Paper-path troubleshooting 295
Overview 295
Paper-jam recovery 296
To disable the paper-jam recovery 296
Avoiding paper jams 297
Persistent jams 298
Basic troubleshooting for persistent jams 298
Data collection 298
General paper-path troubleshooting 299
Paper-path checklist 299
Paper-path test 300
To perform a paper- test 300
Jams in tray 1 301
Jams in tray 2 301
Jams in tray 3 and/or tray 4 302
Jams in the paper path 303
Media transport problems 304
Multiple pages feed 304
Paper is wrinkled or folded 304
Paper is skewed 305
Image-formation troubleshooting 306
Print quality problems associated with media 306
Overhead transparency defects 307
Print quality problems associated with the environment 307
Print quality problems associated with jams 307
Image defects 308
Overview 308
Image quality 308
Check the print cartridge 309
EconoMode 309
Half self-test functional check 310
Drum rotation functional check 310
Image defect tables 311
Repetitive defects troubleshooting 325
Troubleshooting the stacker and the stapler/stacker 326
Overview 326
Initial checks 326
Jam errors 327
Stacker and stapler/stacker paper path 327
Stacker paper path test 327
Stapler/stacker paper path test 328
Paper transport errors 330
Malfunction errors 330
Component errors 331
Printer component locations 332
Main printer parts 332
Printer switches and sensors 336
Printer motors and fans 337
Printer PCAs 338

Download Free Service Manual at http://printer1.blogspot.com

Accessory component locations 339
500-sheet feeder main parts 339
500-sheet feeder switches, sensors, solenoids, and PCAs. 340
1,500-sheet feeder main parts. 341
1,500-sheet feeder switches, sensors, solenoids, and PCAs 343
Stapler/stacker stapler assembly. 344
Stacker and stapler/stacker motors and solenoids 346
Stacker and stapler/stacker PCAs. 347
Printer and accessory wiring diagrams 348
HP LaserJet 4200 wiring diagram 348
HP LaserJet 4300 wiring diagram 349
500-sheet feeder wiring diagram. 350
1,500-sheet feeder wiring diagram 351
Duplex accessory wiring diagram 352
Envelope feeder accessory wiring diagram. 353
Stacker accessory wiring diagram. 354
Stapler/stacker accessory wiring diagram 355
DC controller connectors diagram 356
General timing diagrams. 357
HP LaserJet 4200 general timing diagram 357
HP LaserJet 4300 general timing diagram 358

Download Free Service Manual at http://printer1.blogspot.com

Introduction

In order to use the information in this chapter, you should have a basic understanding of the LaserJet printing process. Explanations of each mechanical assembly, the printer systems, and the basic theory of operation are contained in chapter 5 of this manual. Do not perform any of these troubleshooting processes unless you understand the function of each printer component.

This chapter contains the following sections:

- **Troubleshooting process** This section includes an initial troubleshooting checklist and a troubleshooting flowchart. These contain information about common printer errors that can inhibit proper operation or create print-quality problems. They also include recommendations for resolving the cause of the problem. See "Troubleshooting process" on page 231.
- **Troubleshooting tools** This section contains information that helps to isolate the cause of printer failures. This section contains information about printing information and test pages, resetting printer options, using the diagnostics and service menus, and how to use the embedded Web server. See "Troubleshooting tools" on page 239.
- **Interface troubleshooting** This section provides techniques for isolating the source of communication problems to the printer hardware, the printer configuration, the network configuration, or the software application. See "Interface troubleshooting" on page 255.
- **Display-message troubleshooting** This section explains each control-panel-display message and suggests recommendations for resolving the cause of each message. When the printer message indicates a failure for which the root cause is not obvious, use the printer error troubleshooting section and the troubleshooting tools section found later in this chapter to solve the problem. See "Display-message troubleshooting" on page 257.
- **Paper-path troubleshooting** This section provides information to help solve feed problems. Including print media checks, jam troubleshooting checks, and information about media-caused and printer-caused jams. See "Paper-path troubleshooting" on page 295.
- **Image-formation troubleshooting** This section explains methods for solving print-quality problems. See "Image-formation troubleshooting" on page 306.
- **Stacker and stapler/stacker troubleshooting** This section provides information about solving stacker and stapler/stacker problems. See "Troubleshooting the stacker and the stapler/stacker" on page 326.
- **Printer and accessory components** This section contains illustrations and tables that list the printer and accessory internal components. See "Printer component locations" on page 332 and "Accessory component locations" on page 339.
- **Printer and accessory wiring diagrams** This section contains wiring diagrams for the printers and accessories. See "Printer and accessory wiring diagrams" on page 348.
- **General timing diagrams** This section contains timing diagrams for the printer. See "General timing diagrams" on page 357.

Download Free Service Manual at http://printer1.blogspot.com

Troubleshooting process

When the printer malfunctions or encounters an unexpected situation, information on the printer control panel alerts you to the situation. This section contains an initial troubleshooting checklist that helps to eliminate many possible causes of the problem. The subsequent troubleshooting flowchart helps you to diagnose the cause of the problem. The remainder of the chapter provides steps for correcting the problems that have been identified.

- Use the initial troubleshooting checklist to evaluate the source of the problem and to reduce the number of steps that are required to fix the problem.
- Use the troubleshooting flowchart to pinpoint the cause of malfunctions. The flowchart lists the section within this chapter that provides steps for correcting the malfunction.

Before beginning any troubleshooting procedure, check the following:

- Are supply items (for example, the print cartridge, fuser, and rollers) within their rated life?
- Does the configuration page reveal any configuration problems? See "Configuration page" on page 241.

Hint The customer is responsible for checking and maintaining supplies, and for using supplies that are in good condition. The customer is responsible for media and print-cartridge supplies. The customer is also responsible for replacing the fuser, transfer roller, and all paper pickup, feed, and separation rollers (tray 1 has a separation pad instead of a roller) that are at or near the end of their 200,000-page rated life.

Download Free Service Manual at http://printer1.blogspot.com

Initial troubleshooting checklist

The following checklist contains basic questions that you can ask the customer to help define the problem(s) quickly. For more information about printer and media specifications, see "Site requirements" on page 5 and "Paper specifications" on page 9.

Table 37. Initial troubleshooting checklist

Environment	• Is the printer installed in a suitable environment? See "Site requirements" on page 5. • Is the printer installed on a solid, level surface? • Is the supply voltage (from the wall receptacle) within ± 10 percent of the printer's rated voltage (see "Site requirements" on page 5)? • Is the power cord fully seated into both the printer and the wall receptacle? • Is the operating environment (for example, the temperature and humidity levels) within the specified parameters that are listed in chapter 1 (see "Site requirements" on page 5)? • Is the printer exposed to ammonia gas, such as that produced by diazo copiers or office-cleaning materials? • Is the printer exposed to direct sunlight?
Media	• Is suitable media being used in the printer? See "Supported sizes and weights of media" on page 10 and "Supported types of media" on page 14. • Does the customer use only supported print media? • Is the media in good condition (no curls, folds, or other flaws)? • Is the media stored correctly and within environmental limits? • Is the correct side of the page printed on first? • Is long-grain paper being used?
Input trays	• Is the correct amount of media loaded in the tray (not stacked above the arrows embossed in the tray)? • Is the media placed in the tray correctly? • Are the paper guides aligned with the paper? • Is the tray cassette installed correctly in the printer?
Print cartridge	• Is the print cartridge installed correctly?
Fuser	• Is the fuser installed correctly? See "Fuser" on page 162.
Covers	• Is the top cover closed?
Condensation	• Does condensation occur following a temperature change (particularly in winter following cold storage)? If so, wipe off the affected parts or leave the printer on for 10 to 20 minutes and then attempt to resume printing. • Was a print cartridge opened soon after it was moved from a cold room to a warm one? If so, allow the print cartridge and the printer to acclimate to room temperature for one to two hours.

Download Free Service Manual at http://printer1.blogspot.com

Table 37. Initial troubleshooting checklist (continued)

Miscellaneous	• Are any non-HP components installed? Check for any non-HP components (print cartridges, memory modules, and EIO cards) installed in the printer and remove them. Hewlett-Packard recommends the use of HP components in its printers. • Remove the printer from the network, and make sure that the failure is associated with the printer before beginning troubleshooting.

Download Free Service Manual at http://printer1.blogspot.com

Troubleshooting flowchart

The flowchart on these two pages highlights the general processes you can use to isolate and solve printer hardware problems quickly.

Each heading depicts a major troubleshooting step. A "yes" answer to a question allows you to proceed to the next major step.

A "no" answer indicates that additional testing is needed. Proceed to the appropriate section in this chapter, and follow the instructions there. After completing the instructions, proceed to the next major step in this troubleshooting flowchart.

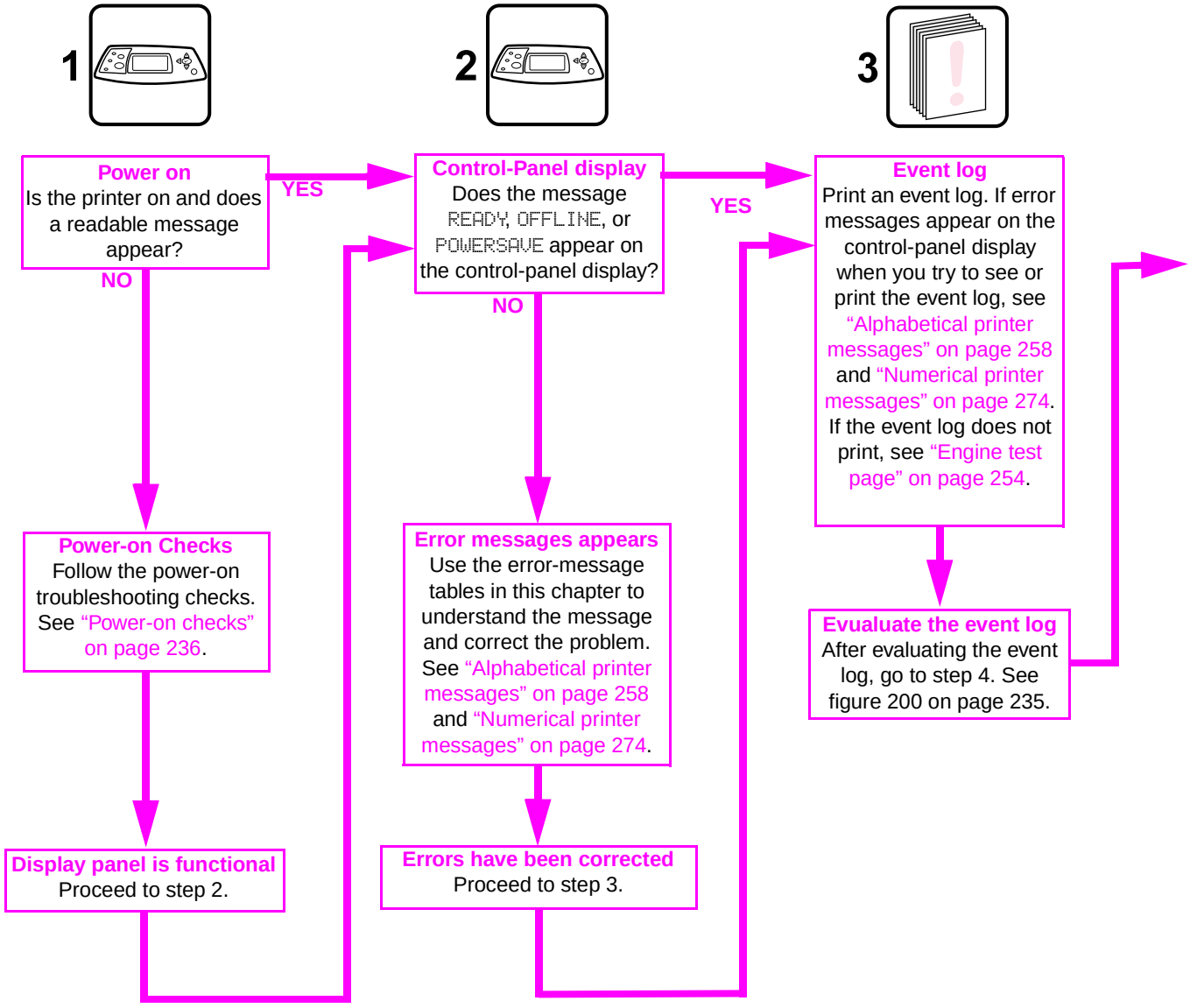

Figure 199. **Troubleshooting flowchart (1 of 2)**

Download Free Service Manual at http://printer1.blogspot.com

Troubleshooting flowchart (continued)

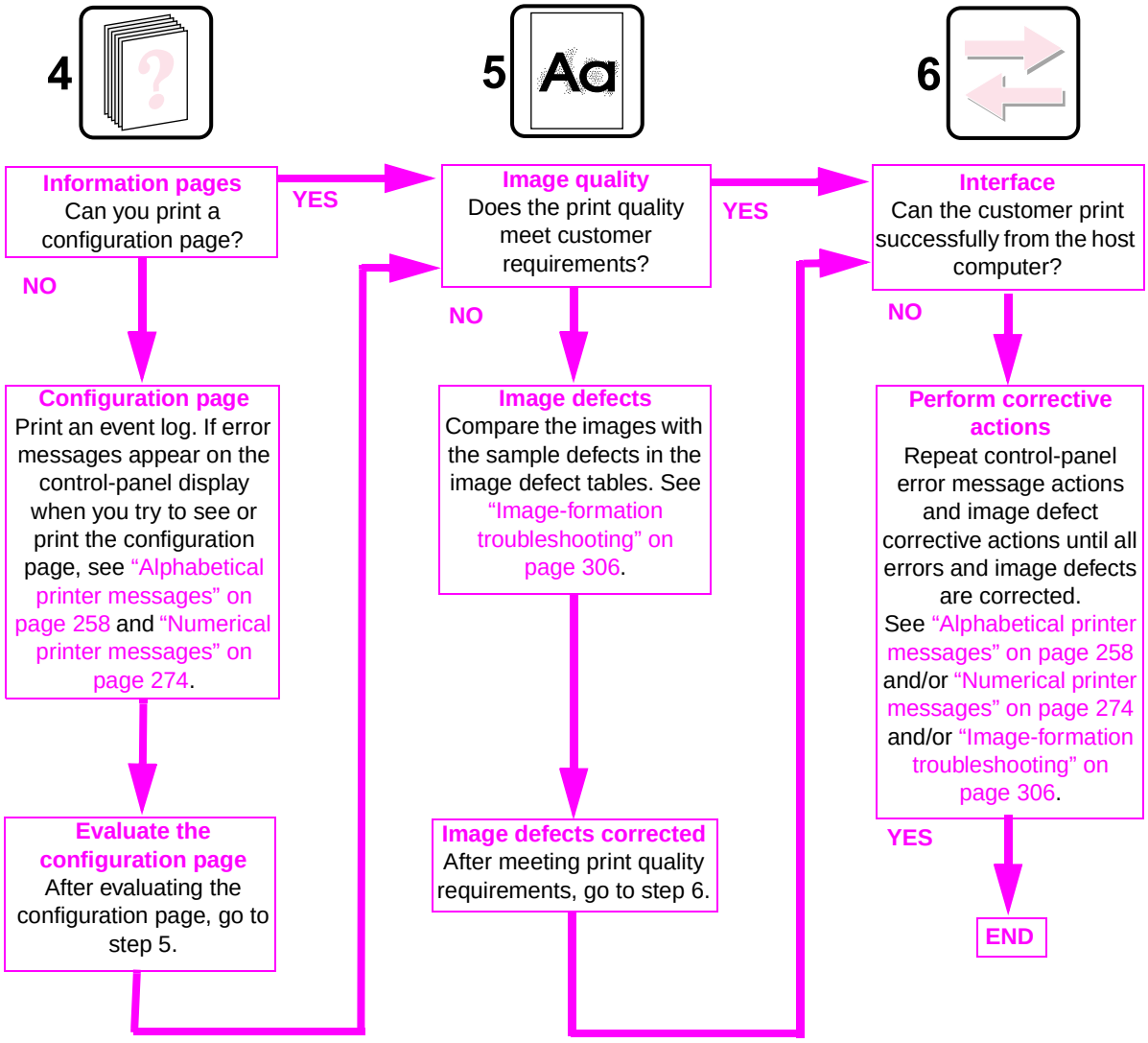

Figure 200. **Troubleshooting flowchart (2 of 2)**

Download Free Service Manual at http://printer1.blogspot.com

Power-on checks

The basic printer functions should start up as soon as the printer is plugged into an electrical wall receptacle and the power switch is pushed to the *on* position.

Overview

Turn on the printer power. If the control-panel display remains blank, random patterns appear, or asterisks remain on the display, perform power-on checks to locate the cause of the problem.

During normal printer operation, the main cooling fan begins to spin briefly after the printer power is turned on. Place your hand over the holes in the left-side cover. If the fan is operating, you will feel a slight vibration and feel air passing into the printer. You can also lean close to the printer and hear the fan operating. When this fan is operational, the dc side of the power supply is properly functioning.

After the fan is operating, the main motor turns on (unless the top cover is open, or a jam condition is sensed, or the paper path sensors are damaged). You should be able to visually and audibly determine if the main motor is turned on.

If the fan and main motor are operating properly, the next troubleshooting step is to separate print engine, formatter, and control-panel problems. Perform an engine test (see "Engine test page" on page 254). If the formatter is damaged, it might interfere with the engine test. If the engine test page does not print, try removing the formatter and performing the engine test again. If the engine test is then successful, the problem is almost certainly with the formatter, the control panel, or the cable that connects them.

If the printer control panel is blank when you turn on the printer, check the following items.

1. Make sure that the printer is plugged into an active electrical outlet that delivers the correct voltage.
2. Make sure that the on/off switch is in the *on* position.
3. Make sure that the fan runs briefly, which indicates that the power supply is operational.
4. Make sure that the control panel display wire-harness is connected. See the hint in the procedure for "Top cover" on page 146.
5. Make sure that the firmware DIMM and the formatter are seated and operating properly. See "Firmware DIMM" on page 160.
6. Remove any HP Jetdirect or other EIO cards, and then try to turn the printer on again.

Note If the printer control-panel display is blank, but the main cooling fan runs briefly after the printer power is turned on, try printing an engine test page to determine whether the problem is with the control-panel display, formatter, or other printer components. See "Engine test page" on page 254.

If the main cooling fan is not operating, check the following items.

7. Check the fuse on the power supply (location FU2; near the power switch) to make sure that it is not open.
8. If necessary, replace the power supply. See "Power supply" on page 188.
9. If necessary, replace the DC controller PCA. See "DC controller PCA" on page 181.

Note It is important to have the printer control panel functional as soon as possible in the troubleshooting process so that the control-panel display can be used to help locate printer errors.

Download Free Service Manual at http://printer1.blogspot.com

Table 38. Power-on defect or blank display

Problem	Action
The power cord is not plugged into the wall receptacle and connected to the printer.	Make sure that the power cord is firmly plugged into the wall receptacle and connected to the printer.
Proper power is not available.	Measure the voltage at the outlet. If necessary, plug the power cord into another circuit outlet.
The power switch is off.	Set the switch to the *on* position. You should hear the switch toggle. If the front right-side cover has been removed recently, make sure that the rod connecting the power supply switch moves as you toggle the switch. See the reinstall note in "Right-side cover" on page 149. If the printer still does not turn on, the power switch might be defective. **1.** Remove the power supply. **2.** Measure the resistance between the two terminals of the power switch (SW1) by applying the tester probes to the terminals. The resistance must be low (under 1 KΩ) when the power is turned on, and high (over 6 MΩ) when the switch is turned off. **3.** Replace the power supply, if necessary.
The overcurrent/overvoltage detection circuit is activated.	Wait for more than two minutes before turning the printer back on.
A fuse is blown.	**1.** Check the fuses (FU1 and FU2) on the power supply. **2.** Replace the power supply if necessary.
The main cooling fan (located on the left side of the printer) does not turn on when the printer is started.	An operational fan indicates the following: ● AC power is present in the printer. ● DC power supply is functional (24V, 5V, and 3.3V are being generated). ● The DC controller's microprocessor is functional. **If the fan is not working**: **1.** Turn the printer off and remove the formatter. Disconnect the optional accessories. **2.** Turn the printer on and check the fan again. **If the fan is still not working**: **1.** Verify that the fan is connected to the power supply. **2.** Replace the fan. See "Main cooling fan (left side)" on page 168. **3.** Replace the power supply assembly. See "Power supply" on page 188. **4.** Replace the DC controller. See "DC controller PCA" on page 181 **Note:** The fan only operates during the initial startup and while printing, and when the temperature inside the printer is too high. If the temperature is too high, the fan turns on to cool the inside of the printer.

Download Free Service Manual at http://printer1.blogspot.com

Table 38. Power-on defect or blank display (continued)

Problem	Action
The fan works, but the control-panel display is blank.	1. Print an engine test. "Engine test page" on page 254 2. If the engine test is successful, perform the following steps in order. ● Reseat the control panel and formatter connector. See "Control-panel assembly" on page 157 and "Formatter assembly" on page 161. ● Replace the control panel cable. See "Control-panel assembly" on page 157. ● Replace the control panel assembly. See "Control-panel assembly" on page 157. ● Replace the firmware DIMM. See "Firmware DIMM" on page 160. ● Replace the formatter. See "Formatter assembly" on page 161. 3. If the engine test is not successful, remove the formatter and attempt to perform the engine test again. If the engine test is successful with the formatter removed, replace the formatter. See "Formatter assembly" on page 161. If the test is not successful with the formatter removed, replace the DC controller PCA. See "DC controller PCA" on page 181.

Download Free Service Manual at http://printer1.blogspot.com

Troubleshooting tools

Press the SELECT (✓) button to open the menus. Use the UP ARROW (▲) button or the DOWN ARROW (▼) button to scroll through the menus that appear. For more information about control panel menus, see "Control-panel menus" on page 39. The high-level menus appear in the following order:

- RETRIEVE JOB
- PAPER HANDLING
- DIAGNOSTICS
- INFORMATION
- CONFIGURE DEVICE
- SERVICE

Information pages

1. Press the SELECT (✓) button to open the MENUS.
2. Press the DOWN ARROW ▼ button to scroll to INFORMATION.
3. Press the SELECT (✓) button to select INFORMATION.
4. Press the DOWN ARROW (▼) button to scroll to a listed information page. The following pages are available:
   - Menu map
   - Configuration
   - Supplies status
   - File directory
   - Usage page
   - PCL and PS font list
5. Press the SELECT (✓) button to select and print the selected information page.

The informational pages for the printer are also available in the embedded Web server. Not all information pages are discussed in detail in this manual. For more information, see the *HP LaserJet 4200/4300 Use Guide.* The information pages include the following.

- **Menu map**: A menu map shows how individual items are configured within the high-level (user-set values) menus. The last page of the menu map series describes instructions about how to use the control-panel buttons. *Print a menu map before changing printer settings or before replacing the formatter assembly.*
- **Configuration page**: The configuration page lists printer configuration information. For example, the printer serial number and tray size settings appear on the configuration page. *Print a configuration page before servicing the printer to help restore values after servicing the printer.*
- **Supplies status**: This page shows the levels of the printer supplies, a calculation of the number of pages that can be printed before the supplies are replaced, and cartridge-usage information.
- **File directory**: This page provides information about files on the ramdisk or installed EIO disk drives and flash DIMMs if those memory accessories are installed.
- **Usage page**: The usage page is only available if an optional hard disk is installed. It provides useful accounting information (for example, the number of pages of various paper sizes that have been used and data that can be used to calculate toner usage).
- **PS or PCL font list**: This page lists the fonts that are installed in the printer memory. This page also lists fonts on an optional hard-disk accessory or flash DIMM if those memory accessories are installed.

Download Free Service Manual at http://printer1.blogspot.com

Menu map

Use the menu map to help navigate the printer submenus and select configuration settings. Printing a menu map is very helpful when you are changing numerous printer settings.

1. Press the SELECT (✓) button to open the menus.
2. Use the UP ARROW (▲) button or the DOWN ARROW (▼) button to scroll to INFORMATION, and then press the SELECT (✓) button.
3. Use the UP ARROW (▲) button or the DOWN ARROW (▼) button to scroll to MENU MAP, and then press the SELECT (✓) button.

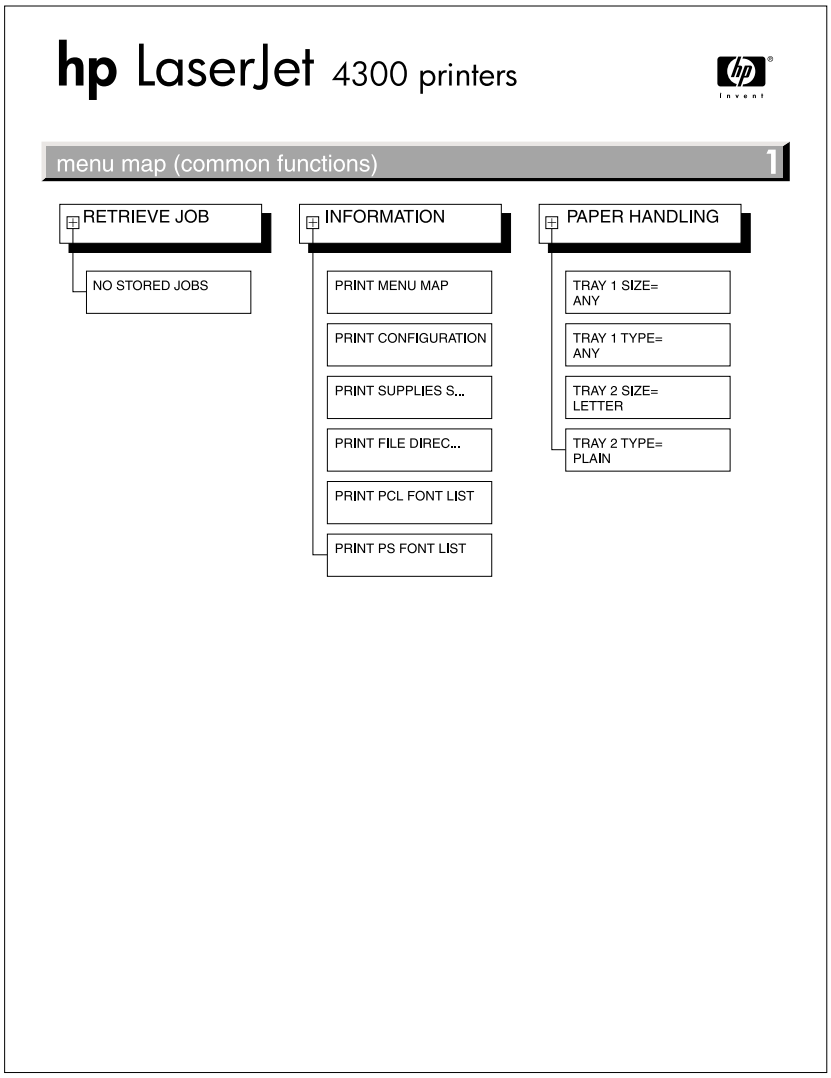

Figure 201. **Sample menu map page**

Download Free Service Manual at http://printer1.blogspot.com

Configuration page

Use the configuration page to view current printer settings, to help troubleshoot printer problems, or to verify installation of optional accessories, such as memory (DIMMs), trays, and printer languages. The content of the configuration page varies, depending on the options currently installed in the printer. To decode the service identification information on the configuration page, see "Converting the Service ID to an actual date" on page 250.

Note If an HP Jetdirect print server is installed, an HP Jetdirect configuration page prints as well. HP LaserJet 4200n/tn/dtn/dtns/dtnsL and 4300n/tn/dtn/dtns/dtnsL printers come with an HP Jetdirect printer server installed.

1. Press the SELECT button to open the menus.
2. Use the UP ARROW button or the DOWN ARROW button to scroll to INFORMATION, and then press SELECT.
3. Use the UP ARROW button or the DOWN ARROW button to scroll to PRINT CONFIGURATION, and then press the SELECT button.

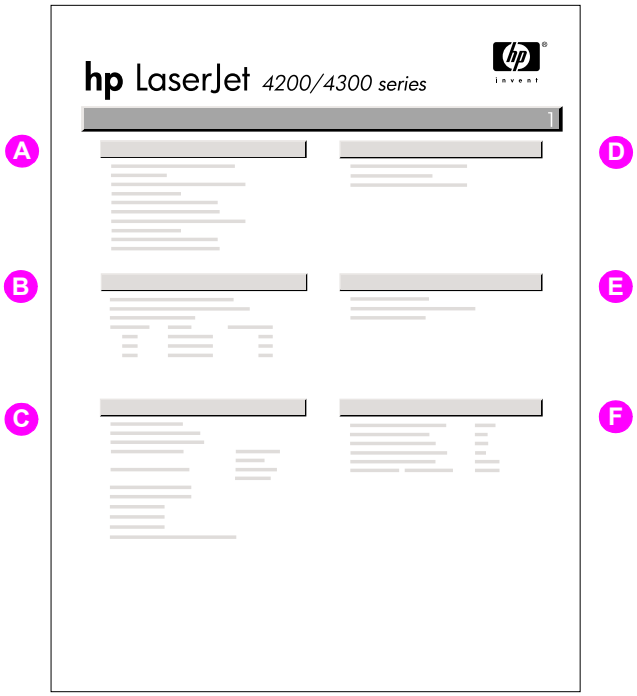

Figure 202. **Configuration page**

A.	Printer Information	Lists the serial number, page counts, printer number (DC controller revision), service ID (see "Service ID" on page 250), and other printer information
B.	Event log	Lists the three most recent event log entries (numeric codes for printer events)
C.	Personalities and options	Lists installed personalities and options (such as PS and PCL languages) and installed optional DIMM(s) or EIO accessories
D.	Memory	Lists the printer memory and I/O buffering and resource saving information
E.	Security	Lists the status of the control-panel lock, control-panel password, and any disk drives
F.	Paper trays and options	Lists the size and type settings for all trays and lists optional paper-handling accessories that are installed

Download Free Service Manual at http://printer1.blogspot.com

Supplies status page

Use the supplies status page to obtain information about the print cartridge installed in the printer, the amount of life left in the print cartridge, and the number of pages and jobs that have been processed. The page also lets you know when you should perform the next preventative maintenance.

1. Press the SELECT (✓) button to open the menus.
2. Use the UP ARROW (▲) button or the DOWN ARROW (▼) button to scroll to `INFORMATION`, and then press the SELECT (✓) button.
3. Use the UP ARROW (▲) button or the DOWN ARROW (▼) button to scroll to `PRINT SUPPLIES STATUS PAGE`, and then press the SELECT (✓) button.

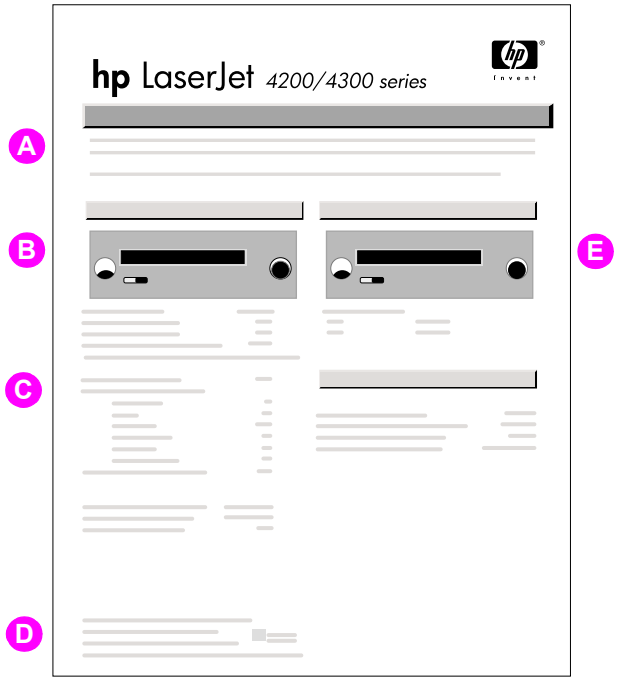

Figure 203. **Supplies status page**

A.	Supplies website	Lists the website for ordering supplies over the Internet
B.	Cartridge information	Provides information about the amount of toner available in the print cartridge, and shows the print-cartridge part number and estimated pages that can be printed for the amount of toner in the cartridge
C.	Printing statistics	Lists statistics about the total number of pages and jobs that have been processed using this print cartridge, the first and last use date for the cartridge, and the print cartridge serial number
D.	Recycle website	Lists the website for information about returning used HP print cartridges
E.	Maintenance kit gauge	Shows a gauge to let you know the remaining life of the maintenance kit components

Download Free Service Manual at http://printer1.blogspot.com

Embedded Web server

When the printer is directly connected to a computer, the embedded Web server is supported for Windows 95 and later. In order to use the embedded Web server with a direct connection, you must choose the Custom installation option when you install the printer driver. Select the option to load Printer Status and Alerts. The proxy server is installed as part of the Printer Status and Alerts software.

When the printer is connected to the network (by using a HP Jetdirect print server EIO card), the embedded Web server is automatically available.

Use the embedded Web server to view printer and network status and to manage printing functions from your computer instead of from the printer control panel. The following are examples of what you can do through the embedded Web server:

- view printer status information
- specify the type of paper that is loaded in each tray
- determine the remaining life for all supplies and order new supplies
- view and change tray configurations
- view and change the printer control panel menu configurations
- view and print internal pages
- receive notification of printer and supplies events
- view and change the network configuration

To use the embedded Web server, you must have Microsoft Internet Explorer 4 and later or Netscape Navigator 4 and later. The embedded Web server works when the printer is connected to an IP-based network. The embedded Web server does not support IPX-based printer connections. You do not have to have Internet access to open and use the embedded Web server.

Gaining access to the embedded Web server

In a supported Web browser on your computer, type the IP address for the printer. (To find the IP address, print a configuration page.)

Note After you navigate to the URL, you can bookmark it so that you can return to it quickly in the future.

The embedded Web server has three tabs that contain settings for and information about the printer: the **Information** tab, the **Settings** tab, and the **Network** tab. Click the tab that you want to view. See the following sections for more information about each tab.

Download Free Service Manual at http://printer1.blogspot.com

Information tab

The **Information** tab contains the following pages.

- **Device Status.** Shows the printer status and the life that remains in HP supplies (0 percent represents that a supply is empty). This page also shows the type and size of print media set for each tray. To change the default settings, click **Change Settings**.
- **Configuration page.** Shows the information that is contained on the printer Configuration page.
- **Supplies Status.** Shows the life that remains in HP supplies (0 percent represents that a supply is empty). This page also provides supplies part numbers. To order new supplies, click **Order Supplies** in the **Other Links** area on the left side of the window. To visit this or any website, you must have Internet access.
- **Event log.** Shows a list of all printer events and errors.
- **Usage page.** Shows a summary of the number of pages the printer has printed, grouped by size and type (this page is only available if an optional hard disk is installed).
- **Device Information.** Shows the printer network name, address, and model information. To change these entries, click **Device Information** on the **Settings** tab.

Settings tab

Use the **Settings** tab to configure the printer from your computer. The **Settings** tab can be password protected. If the printer is on a network, always consult with the network administrator before changing settings on this tab.

The **Settings** tab contains the following pages.

- **Configure Device.** Use this page to configure all the printer settings. This page contains the traditional printer menus: **Information**, **Paper Handling**, **Configure Device**, and **Diagnostics**.
- **Alerts.** (On networks only.) Use this page to establish e-mail alerts for various printer and supplies events.
- **E-mail.** (On networks only.) Use this page in conjunction with the Alerts page to set up incoming and outgoing e-mail, as well as to establish e-mail alerts.
- **Security.** Use this page to set a password that must be typed to gain access to the **Settings** and **Networking** tabs. Also use it to enable and disable certain features of the embedded Web server.
- **Other Links.** Use this page to add or customize a link to another website. The link you establish appears in the **Other Links** area on all embedded Web server pages. The following permanent links always appear in the **Other Links** area: HP Instant Support™, Order Supplies, and Product Support.
- **Device Information.** Use this page to name the printer and assign an asset number to it. Use the name and e-mail address for the primary contact who will receive information about the printer.
- **Language.** Use this page to specify the language in which the embedded Web server information appears.

Networking tab

The network administrator uses this tab to control network-related settings for the printer when it is connected to an IP-based network. This tab does not appear if the printer is directly connected to a computer, or if the printer is connected to a network with anything other than an HP Jetdirect print server card.

Download Free Service Manual at http://printer1.blogspot.com

Other links

This section of the embedded Web server contains links that connect you to the Internet. You must have Internet access in order to use any of these links. If you use a dial-up connection and did not connect when you first opened the embedded Web server, you must connect before you can visit these Web sites. Connecting to the Internet might require that you close your Web browser and reopen it.

- **HP Instant Support™** connects to the HP website to help you find solutions. This service analyzes your printer error log and configuration information to provide diagnostic and support information that is specific to your printer.
- **Order Supplies** connects to the HP website so you can order genuine HP supplies, such as print cartridges and paper.
- **Product Support** connects to the support site for the HP LaserJet 4200/4300 printer, where you can search for help regarding general topics.

Printer Status and Alerts software

Printer Status and Alerts is supported only for Windows 95 and later versions.

The Printer Status and Alerts software is available to users of both networked and directly connected printers. To use Printer Status and Alerts software with a directly connected computer, you must select the Custom installation option when you install the printer driver, and then select the option to install Printer Status and Alerts. For network connections, Printer Status and Alerts is installed automatically with the Typical software installation option.

Use this software to view the embedded Web server information for a particular printer. Printer Status and Alerts also generates messages on the computer that explain the status of the printer and print jobs. Depending on how the printer is connected, you can receive different messages.

- **Networked printers.** You can receive regular job status messages that appear every time a print job is sent to the printer or every time the print job is complete. You can also receive alert messages. These messages appear when you are printing to a particular printer if that printer experiences a problem. In some cases, the printer can continue to print (such as when a tray that is not being used is open, or a print cartridge is low). In other cases, a problem might prevent the printer from printing (such as when paper is out, or a print cartridge is empty).
- **Directly connected printers.** You can receive alert messages that appear when the printer experiences a problem but can continue printing or a problem that prevents it from printing. You can also receive messages that indicate that the print cartridge is low.

You can set alert options for a single printer that supports Printer Status and Alerts, or you can set alert options for all printers that support Printer Status and Alerts. For networked printers, these alerts only appear for your jobs.

Even if you set alert options for all printers, not all of the selected options will apply to all printers. For example, when you select the option to notify you when the print cartridges are low, directly connected printers that support Printer Status and Alerts generate a message when the print cartridges are low. However, none of the networked printers generate this message unless the alert affects a user-specific job.

Download Free Service Manual at http://printer1.blogspot.com

To select status messages

1. Open Printer Status and Alerts in one of these ways:
   - Double-click the **Printer Status and Alerts** tray icon, which is near the clock in the Tray Manager.
   - On the Start menu, point to **Programs**, point to **Printer Status and Alerts**, and click **Printer Status and Alerts**.
2. Click the **Options** icon on the left side of the window.
3. In the **For** field, select the printer driver for this printer, or select **All Printers**.
4. Clear the options for the messages that you do not want to appear, and select the options for the messages that you do want to appear.
5. In **Status check rate**, select how frequently you want the software to update the printer-status information that the software uses to generate the messages. The status check rate might not be available if the network administrator has restricted the rights to this function.

To view status messages and information

On the left side of the window, select the printer for which you want to see information. The information that is provided includes status messages, supplies status, and printer capabilities. You can also click the job history (clock) icon at the top of the window to view a list of previous jobs that were sent to the printer from your computer.

Download Free Service Manual at http://printer1.blogspot.com

Control-panel menus

Use the control-panel menus to control various printer functions. For example, you can use the **Resets** submenu to quickly reset and restore most of the factory default printer settings. Not all of the available menus are described in this manual. For more information about control-panel menus, see "Control-panel menus" on page 39.

Using control-panel menus

1. Press the SELECT (✓) button to open the menus.
2. Use the UP ARROW (▲) button or the DOWN ARROW (▼) button to scroll to the menu that you want, and then press the SELECT (✓) button.
3. Some menus might have several submenus. Use the UP ARROW (▲) button or the DOWN ARROW (▼) button to scroll to the submenu item that you want, and then press the SELECT (✓) button.
4. Use the UP ARROW (▲) button or the DOWN ARROW (▼) button to scroll to the setting, and then press the SELECT (✓) button. An asterisk (*) appears next to the selection on the display, indicating that it is now the default. Some settings change rapidly if the UP ARROW (▲) button or the DOWN ARROW (▼) button is held down.
5. Press PAUSE/RESUME to close the menu.

Resets submenu

To find the **Resets** submenu, use the control panel to open the **Configure Device** menu (see "Control-panel buttons" on page 37 and "Configure Device menu" on page 44). Items on the Resets submenu are used to return settings to the defaults and to change settings such as PowerSave.

The following section lists the settings and their possible values in the **Resets** submenu. The default value for each setting is the one that has an asterisk (*) next to it.

Table 39. Resets submenu

Item	Values	Explanation
RESTORE FACTORY SETTINGS	No values available.	Performs a simple reset and restores most of the factory (default) settings. This item also clears the input buffer for the active I/O. Restoring factory settings does not affect the network parameter settings on the optional HP Jetdirect print server. **CAUTION** Restoring memory during a print job cancels the print job.
POWERSAVE	OFF *ON	Turns the PowerSave mode on or off. The PowerSave mode affects the printer in two ways: • minimizes the amount of power that the printer consumes when it is idle • reduces wear on the electronic components in the printer (for example, it turns off the display backlight, although the display can still be read) The printer automatically leaves the PowerSave mode when you send a print job, press a printer control panel button, open a tray, or open the top cover. You can set the amount of time that the printer remains idle before it enters the PowerSave mode. For more information see "System Setup submenu" on page 49.

Download Free Service Manual at http://printer1.blogspot.com

Diagnostics menu

Administrators can use this menu to isolate parts and to troubleshoot jam and print-quality issues.

The following section lists the settings and their possible values in the **Diagnostics** menu. The default value for each setting is the one that has an asterisk (*) next to it.

Table 40. Diagnostics menu

Item	Values	Explanation
PRINT EVENT LOG	No values available.	Press the SELECT (✓) button to generate a list of the 50 most recent entries in the event log. The printed event log shows the error number, page count, error code, and description or personality that was in use when the event occurred.
SHOW EVENT LOG	No values available.	Use the UP ARROW (▲) button or the DOWN ARROW (▼) button to scroll through the event log contents.
PAPER PATH TEST ● PRINT TEST PAGE ● SOURCE ● DESTINATION ● DUPLEX ● COPIES	No values available.	Generate a test page which is useful for testing the paper-handling features of the printer.
	● PRINT TEST PAGE	Press the SELECT (✓) button to start the paper-path test using the source (tray), destination (output bin), duplex, and number of copies settings that you set in the other items on the Paper Path Test menu. Set the other items before choosing PRINT TEST PAGE.
	● SOURCE ALL TRAYS TRAY 1 *TRAY 2 TRAY [N]	Select the tray for the paper path that you want to test. You can select any tray that is installed. Select ALL TRAYS to test the paper path for every tray. (Paper must be loaded in the selected trays.)
	● DESTINATION ALL BINS *STANDARD OUTPUT OPTIONAL BIN 1	Select the output bin for the paper path that you want to test. You can select any output bin that is installed. Optional bins (stacker or stapler/stacker bin) must also be correctly configured. Select ALL BINS to test the paper path for every bin.
	● DUPLEX *OFF ON	Determine whether or not the paper goes through the duplexer during the paper path test. This item is available only if the duplexer is installed.
	● COPIES *1 10 50 100 500	Set how many sheets of paper are used from each tray during the paper-path test. If you are testing the stapling function of the optional stapler/stacker (DESTINATION item OPTIONAL BIN 1), you must select 10 copies.

Download Free Service Manual at http://printer1.blogspot.com

Service menu (service PIN codes)

Authorized HP service technicians can use this menu to gain access to printer settings that are reserved for service personnel. The service menu is protected by use of a personal identification number (PIN). When you select SERVICE from the list of menus, you are prompted to type an eight-digit PIN code.

Note The printer automatically exits the service menu after about one minute if no menu items are selected or changed.

Use the **PIN code 11420002** for the **HP LaserJet 4200 product** and the **PIN code 11430002** for the **HP LaserJet 4300 product**.

1. Press the Select (✓) button to open the menus. Use the Up Arrow (▲) button or the Down Arrow (▼) button to scroll to SERVICE, and then press the Select (✓) button.
2. Press the Up Arrow (▲) button or the Down Arrow (▼) button until the first digit of the PIN code appears. Press the Select (✓) button to save that digit. Repeat this selection procedure until you have typed the entire eight-digit PIN code. You can use the Left Arrow (◀) button to return to a PIN digit. When the last digit is saved, the service submenu appears on the control-panel display.
3. Use the Up Arrow (▲) button or the Down Arrow (▼) button to scroll to the service-menu item that you want, and then press the Select (✓) button.
   - **Clear event log**. Select this item to clear (resets to zero) the internal event log.
   - **Total page count**. Select this item to set the total number of pages that have been printed to-date. Typically this is only required when a new formatter is installed.
   - **Maintenance count**. Select this item to set the number of pages that have been printed since the last maintenance kit was installed or the total number of pages that have been printed on this printer if a maintenance kit has not yet been installed (during the first 200,000 pages).
   - **Maintenance interval**. Select this item to specify the number of pages that can be printed before a maintenance-kit-required message appears on the control-panel display to indicate that a maintenance kit is required.
   - **Serial number**. Select this item to update the serial number if you replace the formatter.
   - **Service ID**. Select this item to specify the date when the printer was first used, rather than the date when a replacement formatter is installed. See "Restoring the Service ID" on page 250.
   - **Cold reset**. Select this item to reset the default paper size when you replace the formatter. When you perform a cold reset (see "Cold reset" on page 251) or restore factory settings (see "Resets submenu" on page 247). Use this item to restore the initial default factory settings for the paper size. When you replace a formatter in a country/region that uses A4 as the standard paper size, use this item to reset the default paper size to A4. Letter and A4 are the only cold reset values available.

Download Free Service Manual at http://printer1.blogspot.com

Service ID

This information appears on the configuration page (see “Configuration page” on page 241), which eliminates the need for customers to keep paper receipts for proof of the warranty. Because the printer does not have an internal clock, the availability of the service ID date depends on the printer being connected to a source that can provide the date, in this case a time server on the same network as the printer. When the printer is not connected to a date source, the service ID is not available, and 00000 appears on the configuration page.

Restoring the Service ID

If you replace the formatter, the date is lost. Use this menu item to reset the value to the date that the printer was first used. The date format is YYDDD. Use the following procedure to calculate the date.

1. To calculate YY, subtract 1990 from the calendar year. For instance, if the printer was first used in 2002, calculate YY as follows: 2002 – 1990 = 12 (YY = 12).
2. To calculate DDD, use the following formula:
   30 (calendar month – 1) + calendar day = DDD. If the calendar day is 31, use 30 instead. For instance, if the printer was first used on October 17, calculate DDD as follows:
   a. Subtract 1 from 10 (October is the tenth month of the year): 10 – 1 = 9.
   b. Multiply 9 by 30: 9 x 30 = 270.
   c. Add 17 to 270: 270 + 17 = 287 (DDD = 287).

Converting the Service ID to an actual date

You can use the printer’s Service ID number to determine whether the printer is still under warranty. Use the following procedure to convert the Service ID into the installation date.

1. Add 1990 to YY to determine the actual year that the printer was installed.
2. Divide DDD by 30 and add 1 to the remainder. The total is the month.
3. The remainder from the calculation in step 2 is the day of the month.

Using the Service ID 12287 as an example, the date conversion is as follows:

- 12 + 1990 = 2002, so the year is 2002.
- 287 divided by 30 = 9 with a remainder of 17. Add 1 to 9 to get 10 so the month is October.
- The remainder (from the above calculation) is 17, so that is the day of the month.
- The complete date is 17-October-2002.

A 6-day grace period is built into the date system.

Download Free Service Manual at http://printer1.blogspot.com

Printer resets and power-on modes

Cold reset

A cold reset unlocks menus that have been previously locked and sets all control panel menu items (including EIO settings) back to the factory defaults. However, it *does not* clear the values in the service menu (such as the serial number and page counts).

Note Before performing a cold reset, print a menu map and a configuration page (see "Menu map" on page 240 and "Configuration page" on page 241). Use the information on the configuration page to reset any customer-set printer configuration values that the cold reset procedure changes.

To perform a cold reset

1. Turn the printer power off.
2. Hold down the SELECT (✓) button, and then turn the printer power on. Continue holding down the SELECT (✓) button until all three printer control-panel lights flash once and then remain on. This might take up to 10 seconds.
3. After the message SELECT LANGUAGE appears on the display, press the UP ARROW (▲) button or the DOWN ARROW (▼) button until COLD RESET is highlighted.
4. Press the SELECT (✓) button. The printer performs a cold reset and then continues its power-on sequence.
5. Check all I/O settings and reset any customer-set printer configuration values.

NVRAM initialization

CAUTION Initializing the NVRAM resets the serial number, the event log, the page counts, and the EIO card (Initializing the NVRAM *will* reset service menu values to factory defaults). Use the service menu to restore the serial number and page counts. Also reconfigure any computers that print to this printer so that the computers can recognize the printer. Initialize the NVRAM only when absolutely necessary. In most situations, use a cold reset rather than a NVRAM initialization to reset printer settings (this will retain the values in the service menu).

Note Before performing a NVRAM initialization, print a menu map and a configuration page (see "Menu map" on page 240 and "Configuration page" on page 241). Use the information on the configuration page to reset any customer-set printer configuration values that the NVRAM initialization procedure changes. Take special note of the *total page count*, *maintenance count*, and the *serial number*.

To initialize NVRAM

1. Remove any installed accessories (for example, a stapler/stacker).
2. Turn the printer power off.
3. Hold down the DOWN ARROW (▼) button, and then turn the printer power on. Continue holding down the DOWN ARROW (▼) button until all three printer control panel lights flash once and then remain on. This might take up to 10 seconds.
4. Press the UP ARROW (▲) button.
5. Press the PAUSE/RESUME button. The display should show SKIP DISK LOAD.
6. Press the UP ARROW (▲) button until NVRAM INIT is highlighted.
7. Press the SELECT (✓) button. The printer initializes NVRAM and then continues its power-on sequence.

Download Free Service Manual at http://printer1.blogspot.com

Hard-disk initialization

CAUTION A hard-disk initialization erases and reformats the printer hard disk. Perform a hard disk initialization only if an error code on the control panel indicates an EIO disk error. Always try initializing the hard disk before replacing it.

Note Before performing a hard-disk initialization, print a menu map and a configuration page (see "Menu map" on page 240 and "Configuration page" on page 241). Use the information on the configuration page to reset any customer-set printer configuration values that the hard disk initialization procedure changes.

To initialize the hard disk

1. Turn the printer power off.
2. Hold down the PAUSE/RESUME button, and then turn the printer power on. Continue holding down the PAUSE/RESUME button until all three printer control panel lights flash once and then remain on. This might take up to 10 seconds.
3. Press the BACK ARROW (◀) button. The display should show `INITIALIZE DISK`.
4. Press the SELECT (✓) button. The printer initializes the hard disk and continues its power-on sequence.

Power-on bypass

When the power is turned on the printer begins the power-on sequence. By performing a power-on bypass, you can cause the printer to resume the power-on sequence but not to recognize any installed EIO hard disk (skip disk load procedure). This can be helpful in isolating EIO hard-disk errors.

You can also resume the power-on sequence but make the printer continuously print configuration pages until the Pause/Resume button is pressed (self test procedure). This can be helpful if you need to verify the printer components that are installed by reviewing the information found on the configuration page, but the you cannot open the menus to print a configuration page.

Skip disk load

1. Turn the printer power off.
2. Hold down the DOWN ARROW (▼) button, and then turn the printer power on. Continue holding down the DOWN ARROW (▼) button until all three printer control panel lights flash once and then remain on. This might take up to 10 seconds.
3. Press the UP ARROW (▲) button followed by the Pause/Resume button.
4. Press the UP ARROW (▲) button or the DOWN ARROW (▼) button until `SKIP DISK LOAD` is highlighted.
5. Press the SELECT (✓) button. The printer continues the power-on sequence but ignores an installed EIO hard disk.

Download Free Service Manual at http://printer1.blogspot.com

Self test

1. Turn the printer power off.
2. Hold down the SELECT (✓) button, and then turn the printer power on. Continue holding down the SELECT (✓) button until all three printer control panel lights flash once and then remain on. This might take up to 10 seconds.
3. Press the UP ARROW (▲) button or the DOWN ARROW (▼) button until SELF TEST is highlighted.
4. Press the SELECT (✓) button. The printer continues the power-on sequence and begins to continuously printing configuration pages.
5. Press the Pause/Resume button to exit the self test.

Download Free Service Manual at http://printer1.blogspot.com

Test pages

Printing test pages helps you determine whether or not the printer engine and the formatter are functioning.

Engine test page

To verify that the printer engine (all printer components *except* the formatter, formatter DIMMs, EIO products, and the stacker or stapler/stacker) is functioning, print an engine test page. Use a small, non-metallic, pointed object to depress the test-page switch, which is located on the right side of the printer (callout 1).

The test page should have a series of vertical lines. The test page will print from the last tray you printed from. However, if the printer has been turned off and then back on since the most recent print job, the page will print from tray 2. The printer will continuously print test pages as long as the test-page switch is depressed. The printer will not print a test page if it is in PowerSave mode.

Hint A damaged formatter might interfere with the engine test. If the engine test page does not print, try removing the formatter and performing the engine test again. If the engine test is then successful, the problem is almost certainly with the formatter, the control panel, or the cable that connects them.

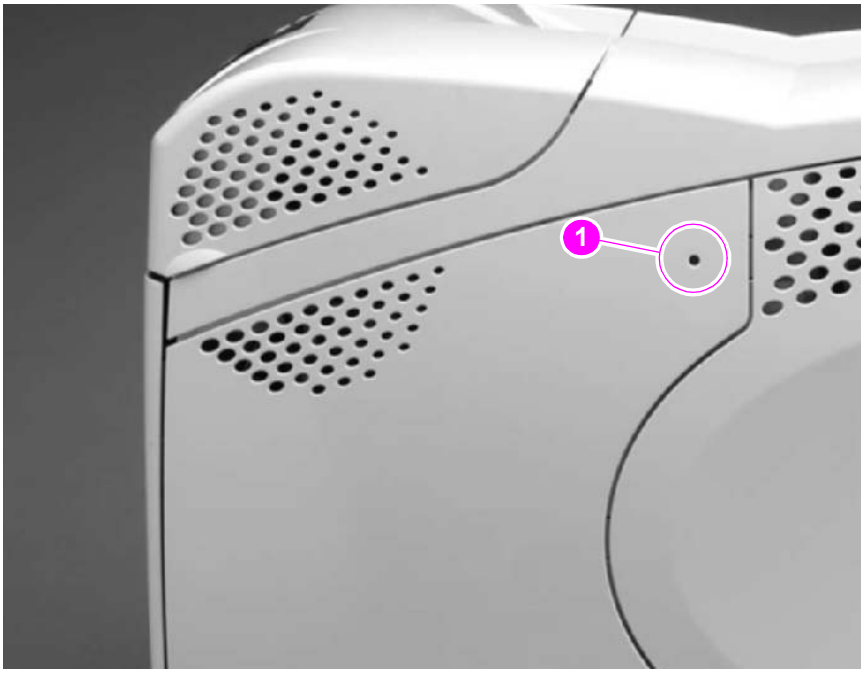

Figure 204. **Engine test-page switch**

Formatter test page

To verify that the formatter is functioning, print a configuration.

1. Press the SELECT (✓) button to open the MENUS.
2. Press the DOWN ARROW (▼) button to scroll to INFORMATION.
3. Press the SELECT (✓) button to select INFORMATION.
4. Press the DOWN ARROW (▼) button to scroll to PRINT CONFIGURATION.
5. Press the SELECT (✓) button to select PRINT CONFIGURATION.

Download Free Service Manual at http://printer1.blogspot.com

Interface troubleshooting

Communications checks

Note Communication problems are normally the customer's responsibility. Time spent attempting to resolve these problems might not be covered by the Hewlett-Packard product warranty.

Refer the customer to the network administrator for assistance in troubleshooting network problems.

If the printer is not connected directly to a Windows or MS-DOS-based host, see "EIO troubleshooting" on page 255.

CAUTION HP LaserJet printers are not designed to work with mechanical switch-box products without proper surge protection. These devices generate high transient voltages that cause permanent damage to the formatter PCA. This circumstance is not covered by the Hewlett-Packard product warranty.

Computer direct connect (parallel) test

After the printer is installed, verify communications by bypassing the Windows driver between the printer and the IBM-compatible computer. Type the following at the MS-DOS prompt:

`C:\DIR>LPT1 Enter` (for printing to parallel port #1)

The printer should print a directory listing of the C: \ directory. You might need to press [Go] on the control panel to print the data in the buffer.

EIO troubleshooting

If the printer contains an optional HP Jetdirect print server, and you cannot communicate with the printer over the network, verify that the print server is operating. Print a configuration page (see "Configuration page" on page 241). If the Jetdirect card does not appear under "Installed personalities and options" on the configuration page, reseat or replace the Jetdirect EIO card. See the troubleshooting section of the *HP Jetdirect Print Server Software Administrators Guide*.

When the HP Jetdirect print server is installed correctly, print a Jetdirect page (this page automatically prints when a Jetdirect print server is installed and a configuration page is printed). See "Jetdirect page" on page 256. The Jetdirect page contains valuable network related information about the printer.

If the host system and printer are still not communicating, replace the formatter PCA and the EIO card and reconfigure the printer.

The following illustration shows the contents of the Jetdirect page.

Download Free Service Manual at http://printer1.blogspot.com

Jetdirect page

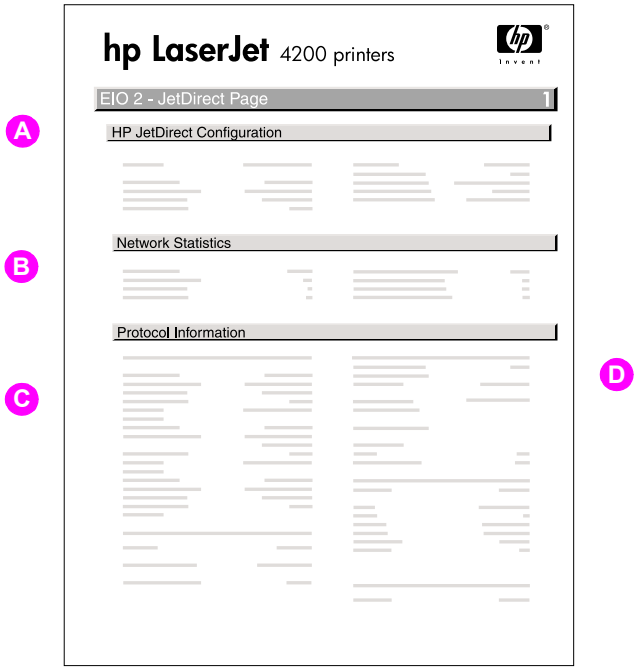

Figure 205. **Jetdirect page**

A. HP Jetdirect Configuration — If the EIO Jetdirect card properly installed and the printer completes its internal diagnostics, the `I/O CARD READY` status message prints. If communication is lost, an `I/O NOT READY` status message prints, followed by a two-digit error code. See the *HP Jetdirect Network Interface Configuration Guide* for further details and recommended action.

B. Network Statistics — This block indicates that network activity has been occurring. Bad packets, framing errors, unsendable packets, and collisions should be minimal. If a high percentage (greater than one percent) of these occur, contact the network administrator. All of the statistics are set to zero when the printer is turned off.

C. TCP/IP — In this block, the default IP address is “192.0.0.192.” you can operate the printer with this default address. The error message `ARP DUPLICATE ADDRESS` might appear in this block. This is also an acceptable error code if the TCP/IP protocol is not being used. Check with the network administrator to determine the correct IP address for the printer. To configure the printer’s IP address, go to the control panel EIO menu, select `CFG NETWORK=YES`, select `CFG TCP/IP=YES`, and then select `BOOTP=NO`.

D. Novell/NetWare — This block should state the name of the Novell printer server to which the printer is connected. If the node name reads “NPI*xxxxxx*” (where *xxxxxx* = the last six digits of the EIO’s LAN address), the EIO card has not been configured for a Novell server. This could indicate that the card is operating under protocol other than Novell. Check with the network administrator to determine what node name might be appropriate.

Download Free Service Manual at http://printer1.blogspot.com

Display-message troubleshooting

The following tables explain the messages that might appear on the control-panel display or in the event log. Alphabetical printer messages and their meanings are listed in “Alphabetical printer messages” on page 258, and numerical printer messages are listed in “Numerical printer messages” on page 274.

Note Not all messages are described in the tables; the messages that are not listed are self-explanatory.

Status messages

Status messages reflect the current state of the printer. They inform you of normal printer operation and require no interaction to clear them. They change as the state of the printer changes. Whenever the printer is ready, is not busy, and has no pending warning messages, the status message READY appears if the printer is online.

Warning messages

Warning messages inform you of data and print errors. These messages typically alternate with READY or with status messages and continue to appear until the SELECT (✓) button is pressed. If CLEARABLE WARNING is set to JOB in the printer’s configuration menu, these messages are cleared when the next print job is sent to the printer.

Error messages

Error messages inform you that an action must be performed, such as adding paper or clearing a paper jam.

Some error messages are auto-continuable (these are not critical errors and the printer will continue to function). If the printer setting AUTO CONTINUE=ON is used, the error message will continue to appear for about 10 seconds and then the printer will resume printing.

Note Pressing any button while an auto-continuable error message appears on the control-panel display overrides the auto-continue feature, and the button’s function will take precedence. For example, pressing the CANCEL JOB button will cancel the job.

Critical-error messages

Critical-error messages inform you of a device failure. Some of these messages can be cleared by turning the printer off and then on. These messages are not affected by the auto-continue setting. If a critical error persists, then service is required.

Download Free Service Manual at http://printer1.blogspot.com

Alphabetical printer messages

Note Not all messages are described in the tables; the messages that are not listed are self-explanatory.

Table 41. Alphabetical printer messages

Message	Description	Action
ACCESS DENIED MENUS LOCKED	An attempt has been made to modify a printer menu item, but the network systems administrator has enabled the control-panel security mechanism. The message will disappear shortly, and the printer will return to the ready state.	Contact the network systems administrator to change settings.
BAD DUPLEXER CONNECTION	The duplexer is not functioning.	**1.** Turn off the printer. **2.** Remove and then reinstall the accessory. **3.** Turn on the printer. **4.** Check the rear accessory power connector. **5.** If the error persists, replace the duplexer.
BAD ENVELOPE FEEDER CONNECTION	The envelope feeder is not functioning.	**1.** Turn off the printer. **2.** Remove, and then reinstall the accessory. **3.** Turn on the printer. **4.** Check the front accessory power connector. **5.** If the problem persists, replace the envelope feeder.
CANNOT DUPLEX Check rear bin or CANNOT DUPLEX Check paper	The printer cannot perform the duplex function.	**1.** Close the face-up bin before sending a duplex print job. **2.** Replace the duplexer. **3.** Replace the DC controller PCA. See "DC controller PCA" on page 181.
CARTRIDGE FAILURE For help press ? alternates with RETURN FOR REPLACEMENT For help press ?	The print cartridge contains part of the sealing tape.	**1.** Try to remove the sealing tape. **2.** If the sealing tape cannot be removed, insert a new print cartridge and return the faulty print cartridge for replacement.
CHOSEN PERSONALITY NOT AVAILABLE For help press ? alternates with CHOSEN PERSONALITY NOT AVAILABLE To continue press ✓	The printer job language (PJL) encountered a request for a personality that did not exist in the printer. The job is aborted and no pages print.	**1.** Press the HELP (?) button for detailed information. **2.** Press the UP ARROW (▲) button and the DOWN ARROW (▼) button to step through the instructions.

Download Free Service Manual at http://printer1.blogspot.com

Table 41. Alphabetical printer messages (continued)

Message	Description	Action
CLOSE TOP COVER For help press ?	The top cover is open or the top cover switch (SW101) is defective.	1. Press the HELP (?) button for information. 2. Close the top cover. 3. Replace the top cover switch (SW101). See figure 212 on page 335.
DATA RECEIVED To print last page press ✓	The printer received data and is waiting for a form feed. When the printer receives another file, the message should disappear.	Press the SELECT (✓) button to continue.
DETECTABLE SIZE IN TRAY XX For help press ? alternates with DETECTABLE SIZE IN TRAY XX Recommend move switch to STANDARD	A tray has been loaded with media that is a standard size and the switch in the tray is set to "custom."	1. Press the HELP (?) the for detailed information. 2. Press the UP ARROW (▲) button and the DOWN ARROW (▼) button to step through the instructions.
DISK DEVICE FAILURE alternates with READY For menus press ✓	A device failure has occurred on the specified drive.	1. Printing can continue for jobs that do not require access to the disk drive. 2. Press the SELECT (✓) button to continue. 3. If the message persists, remove and reinstall the EIO disk drive. 4. Reinitialize the EIO disk. 5. If the message persists, replace the EIO disk drive.
DISK FILE OPERATION FAILED alternates with READY For menus press ✓	The printer received a PJL file system command that attempted to perform an illogical operation (for example, a command to download a file to a nonexistent directory).	1. Printing can continue. 2. Press the SELECT (✓) button to continue. 3. If the message reappears, then a problem might exist with the software application.
DISK FILE SYSTEM IS FULL alternates with READY For menus press ✓	The printer received a PJL file system command that attempted to store something on the file system. The attempt was unsuccessful because the file system is full.	1. Use the device storage manager in the HP Web Jetadmin software to delete files from the EIO disk drive and then try again. 2. Press the SELECT (✓) button to continue.
DISK IS WRITE PROTECTED alternates with READY For menus press ✓	The file system device is protected and no new files can be written to it.	1. To enable writing to the disk, turn off the write protection by using the device storage manager in HP Web Jetadmin. 2. Press the SELECT (✓) button to continue.

Download Free Service Manual at http://printer1.blogspot.com

Table 41. Alphabetical printer messages (continued)

Message	Description	Action
EIO DISK X NOT FUNCTIONAL For help press **?**	The EIO disk in slot *X* is not working correctly.	**1.** Remove the EIO disk from the indicated slot and reinstall it. **2.** If the error persists, replace the EIO disk drive
ENVELOPE FEEDER EMPTY	The envelope feeder is empty.	**1.** Refill the envelope feeder. **2.** Turn off the printer. **3.** Remove and then reinstall the accessory. Turn the printer on. **4.** If the error persists, replace the envelope feeder.
FLASH DEVICE FAILURE alternates with READY For menus press ✓	A flash DIMM is installed in one of the formatter slots.	**1.** Printing can continue for jobs that do not require the flash DIMM. **2.** Press the SELECT (✓) button to continue. **3.** If the message persists, remove and reinstall the flash DIMM. See "Firmware DIMM" on page 160. **4.** If the message persists, replace the flash DIMM. See "Firmware DIMM" on page 160.
FLASH FILE OPERATION FAILED alternates with READY For menus press ✓	The printer received a PJL file system command that attempted to perform an illogical operation (for example, a command to download a file to a non-existent directory).	**1.** Printing can continue. **2.** Turn the printer off and then back on to delete the message from the display. **3.** If the message reappears, a problem might exist with the software application.
FLASH FILE SYSTEM IS FULL alternates with READY For menus press ✓	The printer received a PJL file system command that attempted to store something on the file system. The attempt was unsuccessful because the file system is full.	**1.** Use HP Web Jetadmin Device Storage Manager software to delete files from the flash memory and try again. **2.** Press the SELECT (✓) button to continue.
FLASH IS WRITE PROTECTED alternates with READY For menus press ✓	The file system device is protected and no new files can be written to it.	**1.** To enable writing to the flash memory, turn off the write protection by using the device storage manager in HP Web Jetadmin. **2.** Press the SELECT (✓) button to continue.
INCORRECT	The wrong personal identification number (PIN) was typed.	Type the correct PIN code. After three incorrect PIN entries, the printer returns to the Ready state.

Download Free Service Manual at http://printer1.blogspot.com

Table 41. Alphabetical printer messages (continued)

Message	Description	Action
INSERT OR CLOSE TRAY XX For help press ?	Tray *XX* must be inserted or closed before the current job can be printed.	**1.** Press the HELP (?) button for detailed information. **2.** Press the UP ARROW (▲) button and the DOWN ARROW (▼) button to step through the instructions. **3.** If the error persists, verify that the indicated tray's media-size sensor (PS102, SW801, or SW1) is properly operating. See figure 213 on page 336, figure 217 on page 340, or figure 220 on page 343. Verify that the sensor "fingers" inside the tray are engaging the tray sensor correctly. **4.** Print a configuration page. See "Configuration page" on page 241. **5.** If the tray settings on the configuration page are correct, verify that the tray's paper-out sensor is operating. See "Printer switches and sensors" on page 336, "500-sheet feeder switches, sensors, solenoids, and PCAs" on page 340, or "1,500-sheet feeder switches, sensors, solenoids, and PCAs" on page 343.
INSTALL CARTRIDGE alternates with For help press ?	The cartridge is either not installed or not correctly installed in the printer.	**1.** Insert the cartridge, or make sure that the cartridge is fully seated. **2.** Press the HELP (?) button for detailed information. **3.** Press the UP ARROW (▲) button and the DOWN ARROW (▼) button to step through the instructions. **4.** If the error persists, replace the cartridge. **5.** Verify that the connectors between power supply and transfer assembly are not damaged. **6.** Replace the power supply. See "Power supply" on page 188. **7.** Replace the transfer assembly. See "Transfer assembly" on page 200.

Download Free Service Manual at http://printer1.blogspot.com

Table 41. Alphabetical printer messages (continued)

Message	Description	Action
INSTALL FUSER For help press ?	The fuser is either not installed or not correctly installed in the printer.	**1.** The fuser is not fully seated or has been removed and must be reinstalled for printing to continue. See "Fuser" on page 162. ● If the fuser is in the printer, remove and reinstall it. ● If the fuser is not in the printer, install it. **2.** Push the fuser firmly into the printer until the blue levers on both sides click into place. **3.** Press the HELP (?) button for detailed information. **4.** Press the UP ARROW (▲) button and the DOWN ARROW (▼) button to step through the instructions. **5.** If the error persists, verify that the fuser connector (J128 for the HP LaserJet 4200; J228 for the HP LaserJet 4300) is good. **6.** Replace the fuser assembly. See "Fuser" on page 162. **7.** Replace the DC controller PCA. See "DC controller PCA" on page 181. **8.** Replace the power supply. See "Power supply" on page 188.
LOAD TRAY XX: <TYPE> <SIZE> For help press ? alternates with LOAD TRAY XX: <TYPE> <SIZE> TO USE ANOTHER TRAY PRESS ✓	Tray *XX* is either empty (based on the operation of the paper sensor) or configured for a type and size other than that specified in the job.	**1.** Press the HELP (?) button for detailed information. **2.** Press the UP ARROW (▲) button and the DOWN ARROW (▼) button to step through the instructions. **3.** Print a configuration page and verify that the tray settings are correctly set. See "Configuration page" on page 241. **4.** If the tray settings on the configuration page do not match the actual tray setting, verify that the indicated tray's paper width switch (SW102, SW801, or SW1) is operating correctly. See figure 213 on page 336, figure 217 on page 340, or figure 220 on page 343.

Download Free Service Manual at http://printer1.blogspot.com

Table 41. Alphabetical printer messages (continued)

Message	Description	Action
LOAD TRAY XX: <TYPE> <SIZE> For help press ?	Tray *XX* is either empty (based on the operation of the paper sensor) or configured for a type and size other than that specified in the job. No other tray is available.	**1.** Press the HELP (?) button for detailed information. **2.** Press the UP ARROW (▲) button and the DOWN ARROW (▼) button to step through the instructions. **3.** Print a configuration page and verify that the tray settings are correctly set. See "Configuration page" on page 241. **4.** If the tray settings on the configuration page do not match the actual tray setting, verify that the indicated tray's paper width switch (PS106, SW801, or SW1) is operating correctly. See figure 213 on page 336, figure 217 on page 340, or figure 220 on page 343.
LOWER THE OPTIONAL BIN **Note**: The stacker or stapler/stacker LED blinks in amber.	The stacker or stapler/stacker output bin is in the raised position.	**1.** Lower the output bin. **2.** If this error persists, replace the stacker or stapler/stacker.
MANUALLY FEED <TYPE> <SIZE> For help press ? alternates with MANUALLY FEED <TYPE> <SIZE> To continue press ✓	A job was sent that requires a specific paper type and size that is not currently available.	**1.** Press the HELP (?) button for detailed information. **2.** Press the UP ARROW (▲) button and the DOWN ARROW (▼) button to step through the instructions. **3.** If the requested paper size and type is installed in one of the trays, print a configuration page (see "Configuration page" on page 241) to see if the printer tray setting differ from the paper size and type in the tray. **4.** Check the tray size sensor switches if the configuration page indicates a different size than that in the tray. Verify that the sensor "fingers" inside the tray are engaging the tray sensor correctly. See "Tray 2, 500-, 1,500-sheet feeder media size detection" on page 83.

Download Free Service Manual at http://printer1.blogspot.com

Table 41. Alphabetical printer messages (continued)

Message	Description	Action
NON HP CARTRIDGE DETECTED	The printer has detected that an HP print cartridge is currently installed. If a new HP cartridge has been installed, this message appears for about 20 seconds and then is replaced by the READY message.	**1.** If the print cartridge appears to be an authentic HP cartridge, try installing another HP print cartridge that has the same shipment lot number. If this clears the error message, return the print cartridge that you removed to the supplier as defective. **2.** If the error message persists, the print cartridge might be a fraudulent cartridge. **3.** If the error message persists, the memory chip on the print cartridge (location J600) might be defective or the connector might be defective. **4.** The DC controller PCA might be defective. Replace the DC controller PCA. See "DC controller PCA" on page 181. **NOTE:** Printer repairs that are required as a result of using non-HP print cartridges are *not* covered under the HP warranty.
NON HP CARTRIDGE DETECTED alternates with READY For menus press ✓	The printer has detected that a non-HP print cartridge is currently installed.	**1.** If the print cartridge appears to be an authentic HP cartridge, try installing another HP print cartridge that has the same shipment lot number. If this clears the error message, return the print cartridge you removed to the supplier and report that it is defective. **2.** If the error message persists, the print cartridge might be a fraudulent cartridge. **3.** If the error message persists, the memory chip on the print cartridge or the connector (location J600) might be defective. **4.** The DC controller PCA might be defective. Replace the DC controller PCA. See "DC controller PCA" on page 181. **NOTE:** Printer repairs that are required as a result of using non-HP print cartridges are *not* covered under the HP warranty.

Download Free Service Manual at http://printer1.blogspot.com

Table 41. Alphabetical printer messages (continued)

Message	Description	Action
OUTPUT BIN 1 FULL REMOVE ALL PAPER FROM BIN **Note**: The stacker or stapler/stacker LED blinks in amber.	The stacker or stapler/stacker output bin is full and must be emptied in order to continue printing.	**1.** Remove the media from the output bin. **2.** If the error persists, verify that the output bin flapper (the four plastic paddles hanging down in front of the output bin rollers) can move freely. **3.** Replace the stacker or stapler/stacker.
OUTPUT PAPER PATH OPEN **Note**: The stacker or stapler/stacker LED blinks in amber.	The jam-access door or the staple cartridge door is open.	**1.** Press the HELP (**?**) button for detailed information. **2.** Press the UP ARROW (▲) button and the DOWN ARROW (▼) button to step through the instructions. **3.** Close the open door. **4.** If this message persists, replace the stacker or stapler/stacker.
PERFORM PRINTER MAINTENANCE alternates with READY For menus press ✓	To ensure optimum print quality, the printer prompts you to perform routine maintenance every 200,000 pages (default setting). ● Q2429A; 110 V printer kit for the HP LaserJet 4200 ● Q2436A; 110 V printer kit for the HP LaserJet 4300 ● Q2430A; 220 V printer kit for the HP LaserJet 4200 ● Q2437A; 220 V printer kit for the HP LaserJet 4300	Install an HP LaserJet 4200/4300 printer maintenance kit. See the instructions that come with this kit. -or- Continue printing and order a printer maintenance kit For information about how to order a maintenance kit, see chapter 8 in this manual.
PERFORMING UPGRADE	A firmware upgrade is in progress.	**CAUTION** Do not turn the printer off until the printer returns to the Ready state. The printer will be damaged if the power is turned off during a firmware upgrade.
PRINTING... REGISTRATION PAGE	The printer is generating the registration page. The printer will return to the Ready state when the page is completed.	Follow the instructions on the printed pages.

Download Free Service Manual at http://printer1.blogspot.com

Table 41. Alphabetical printer messages (continued)

Message	Description	Action
RAM DISK DEVICE FAILURE alternates with READY For menus press ✓	The RAM disk had a critical failure and can no longer be used.	**1.** Turn the printer power off, and then on again. **2.** If this error persists, a defective DRAM DIMM might be installed in the printer (on the formatter). Replace the DRAM DIMM(s). The procedure for replacing a DRAM DIMM is the same as replacing a firmware DIMM. See "Firmware DIMM" on page 160.
RAM DISK FILE OPERATION FAILED alternates with READY For menus press ✓	The printer received a PJL file system command that attempted to perform an illogical operation (for example, a command to download a file to a nonexistent directory).	**1.** Printing can continue. **2.** Turn the printer off and then on to delete the message from the display. **3.** If this error persists, a problem might exist with the software application.
RAM DISK FILE SYSTEM IS FULL alternates with READY For menus press ✓	The RAM disk is full.	**1.** Delete files and then try again, or turn the printer off and then on to delete all the files on the RAM disk. **2.** If the message persists, increase the size of the RAM disk by adding additional memory DIMMs.
RAM DISK IS WRITE PROTECTED alternates with READY For menus press ✓	The file system device is protected and no new files can be written to it.	To enable writing to the RAM disk, turn off the write protection by using the device storage manager in the HP Web Jetadmin software.
RECEIVING UPGRADE	A firmware upgrade is in progress.	**CAUTION** Do not turn the printer off until the printer returns to the ready state. The printer will be damaged if the power is turned off during a firmware upgrade.
REINSERT DUPLEXER	The duplexer is not functioning.	**1.** Turn off the printer. **2.** Remove and then reinstall the accessory. **3.** Turn on the printer. **4.** Check the rear accessory power connector. **5.** If the error persists, replace the duplexer.

Download Free Service Manual at http://printer1.blogspot.com

Table 41. Alphabetical printer messages (continued)

Message	Description	Action
REPLACE CARTRIDGE alternates with For help press **?**	No toner remains in the print cartridge. Printing can continue until the toner supply is depleted.	**1.** Replace the print cartridge to continue printing. **1.** Press the HELP (**?**) button for detailed information. **2.** Press the UP ARROW (▲) button and the DOWN ARROW (▼) button to step through the instructions. **3.** Supplies-ordering information is also available from the embedded Web server. **4.** If this error persists, replace the power supply. See "Power supply" on page 188.
RESEND UPGRADE	The firmware upgrade was not completed successfully.	Attempt the upgrade again.

Download Free Service Manual at http://printer1.blogspot.com

Table 41. Alphabetical printer messages (continued)

Message	Description	Action
SIZE MISMATCH TRAY XX=<SIZE> For help press ? alternates with READY For menus press ✓	The tray is loaded with media that is longer or shorter in the feed direction than the size setting for the tray.	**1.** Adjust the side and rear paper guides against the paper. From the control panel, set the tray 1 paper size to the media size that will be used in tray 1. **2.** If the media being used is Letter, A4, Executive, B5 JIS, A5, or Legal size, the tray switch should be set to "standard." Set the tray switch to "custom" for all other media sizes. The custom size switch must be set before the size can be selected at the control panel. **3.** Print a configuration page and verify that the tray size settings match the actual tray settings. If the settings do not match, verify that the tray size sensors are correctly functioning. If they are not, replace the media-size sensors (SW102, SW801, or SW1). See figure 213 on page 336, figure 217 on page 340, or figure 220 on page 343. Verify that the sensor "fingers" inside the tray are engaging the tray sensor correctly. See "Tray 2, 500-, 1,500-sheet feeder media size detection" on page 83. **4.** Replace the indicated feeder control PCA. For the 500-sheet feeder, see "500-sheet feeder control PCA" on page 207. For the 1,500-sheet feeder, see "1,500-sheet feeder control PCA" on page 220. **5.** Replace the DC controller PCA. See "DC controller PCA" on page 181.
STANDARD OUTPUT BIN FULL Remove all paper from bin	The top (standard) output bin is full and must be emptied.	**1.** Empty the top output bin. **2.** If the error persists, verify that the output bin sensor (PS104) is operating and that the sensor arm can freely move. See figure 213 on page 336.

Download Free Service Manual at http://printer1.blogspot.com

Table 41. Alphabetical printer messages (continued)

Message	Description	Action
STAPLER LOW ON STAPLES For help press ? **Note**: The stapler/stacker LED is continuously illuminated green (this error applies to the stapler/stacker only).	Fewer than 70 staples remain in the optional stapler/stacker staple cartridge. Printing will continue until the STAPLER OUT OF STAPLES message appears on the printer control-panel display.	1. Press the HELP (?) button for detailed information. 2. Press the UP ARROW (▲) button and the DOWN ARROW (▼) button to step through the instructions. 3. If after following the instruction above this error persists, replace the staple unit. See "To remove and replace the stapler unit" on page 60. **NOTE:** The customer is responsible for ordering replacement staple cartridges.
STAPLER OUT OF STAPLES For help press ? **Note**: The stapler/stacker LED blinks in amber (this error applies to the stapler/stacker only).	Fewer than 15 staples remain in the optional stapler/stacker. The printer behavior depends on how STAPLES OUT is configured. ● If STAPLES OUT=STOP, the printer stops printing until you refill the stapler or press the SELECT (✓) button. This is the default setting. ● If STAPLES OUT=CONTINUE, printing continues but following jobs will not be stapled.	1. Press the HELP (?) button for detailed information. 2. Press the UP ARROW (▲) button and the DOWN ARROW (▼) button to step through the instructions. 3. Replace the staple cartridge. 4. If this error persists, Replace the stapler unit (see "To remove and replace the stapler unit" on page 60) followed by the stapler/stacker if necessary.
TOO MANY PAGES IN JOB TO STAPLE **Note**: The stapler/stacker LED is continuously illuminated in green (this error applies to the stapler/stacker only)	The maximum number of sheets the stapler can staple is 15. The print job finishes printing but is not stapled.	Reduce the number of pages in the print job, or print and staple in batches of 15 or fewer pages.
TOO MANY TRAYS INSTALLED Turn power off and unistall a tray.	Too many optional input trays are installed. A maximum of two optional trays is allowed.	Turn off the printer power and remove a tray.

Download Free Service Manual at http://printer1.blogspot.com

Table 41. Alphabetical printer messages (continued)

Message	Description	Action
TRAY XX CONTAINS UNKNOWN MEDIA	The media type or size in the specified tray cannot be determined.	**1.** To change the media type, press the SELECT (✓) button. Use the UP ARROW (▲) button and the DOWN ARROW (▼) button to scroll to the type, and then press the SELECT (✓) button to select it. **2.** To change the media size to Letter, A4, Executive, B5 JIS, A5, or Legal, leave the tray switch in the "standard" position. **3.** To change the media size to other sizes, move the tray switch to "custom", adjust the paper guides against the paper, and close the tray. Use the UP ARROW (▲) button and the DOWN ARROW (▼) button to scroll to the media size, and then press the SELECT (✓) button to select it.
TRAY XX EMPTY <TYPE> <SIZE> alternates with READY For help press ✓	The specified tray is empty, but the current job does not require this tray in order to print correctly.	**1.** Refill the indicated tray. **2.** If the error persists, verify that the indicated tray's paper-out sensor (PS105,PS101, PS801, or SR3) is properly functioning correctly. See figure 213 on page 336, figure 217 on page 340, or figure 220 on page 343.
TRAY XX OPEN For help press **?** alternates with READY For menus press ✓	The specified tray is open or not closed completely.	**1.** Close the tray. **2.** If this error persists, verify that the indicated tray's media-size sensors (SW102, SW801, or SW1) is properly functioning correctly. See figure 213 on page 336, figure 217 on page 340, or figure 220 on page 343. Verify that the sensor "fingers" inside the tray are engaging the tray sensor correctly. See "Tray 2, 500-, 1,500-sheet feeder media size detection" on page 83.

Download Free Service Manual at http://printer1.blogspot.com

Table 41. Alphabetical printer messages (continued)

Message	Description	Action
TRAY XX SIZE= <XXXX SIZE> For help press **?**	A tray was installed with the standard/custom switch set to “custom”, or with the paper guides in a non-standard configuration. The printer is prompting you to use the control panel to specify a predefined non-standard paper size, a ”custom” paper size, or an “any custom” or an “any” size setting. (The user’s software program defines the “any custom” and “any” size settings.)	**1.** Use the control panel to select the appropriate custom paper size. Press the SELECT (✓) button. **2.** If the media used is Letter, A4, Executive, B5 JIS, A5, or Legal sized, the tray switch should be set to “standard.” Set the tray switch to ”custom” for all other media sizes. The tray switch must be set to custom before the size can be selected at the control panel. **3.** Print a configuration page and verify that the tray size settings match the actual tray settings. If the settings do not match, verify that the tray size sensors are properly functioning. If they are not, replace the media-size sensors (SW102, SW801, or SW1). See figure 213 on page 336, figure 217 on page 340, or figure 220 on page 343. Verify that the sensor “fingers” inside the tray are engaging the tray sensor correctly. See “Tray 2, 500-, 1,500-sheet feeder media size detection” on page 83.

Download Free Service Manual at http://printer1.blogspot.com

Table 41. Alphabetical printer messages (continued)

Message	Description	Action
TRAY XX <TYPE> <SIZE> TO CHANGE TYPE PRESS ✓ alternates with TRAY XX <TYPE> <SIZE> SIZE DETECTED BY TRAY	The printer is reporting the current configuration of tray *XX*. The tray switch is in the “standard” position.	**1.** To change the media type, press the SELECT (✓) button. Use the UP ARROW (▲) button and the DOWN ARROW (▼) button to scroll to the type, and then press the SELECT (✓) button to select it. **2.** To change the media size to Letter, A4, Executive, B5 JIS, A5, or Legal, leave the tray switch in the “standard” position and adjust the media guides to the correct positions. **3.** To change the media size to other sizes, move the tray switch to “custom”, adjust the paper guides against the paper, and close the tray. **4.** Use the UP ARROW (▲) button and the DOWN ARROW (▼) button to scroll to the media size, and then press the SELECT (✓) button to select it. Repeat this procedure to select the media type. **5.** If the size that appears on the control panel display is incorrect and the tray paper guides are properly adjusted, verify that the indicated tray’s media-size sensor (SW102, SW801, or SW1) is operating. See figure 213 on page 336, figure 217 on page 340, or figure 220 on page 343. Verify that the sensor “fingers” inside the tray are engaging the tray sensor correctly. See “Tray 2, 500-, 1,500-sheet feeder media size detection” on page 83.

Download Free Service Manual at http://printer1.blogspot.com

Table 41. Alphabetical printer messages (continued)

Message	Description	Action
TRAY XX <TYPE> <SIZE> SIZE SPECIFIED BY USER alternates with TRAY XX <TYPE> <SIZE> TO CHANGE TYPE PRESS ✓	The printer is reporting the current configuration of tray *XX*. The tray switch is in the “custom” position.	**1.** To change the media type, press the SELECT (✓) button. Use the UP ARROW (▲) button and the DOWN ARROW (▼) button to scroll to the type, and then press the SELECT ✓ button to select it. **2.** To change the media size to Letter, A4, Executive, B5 JIS, A5, or Legal, set the tray switch to the “standard” position and adjust the media guides to the correct positions. **3.** To change the media size to other sizes, leave the tray switch in the “custom” position, adjust the media guides against the media, and close the tray. **4.** Select the **Paper Handling** menu from the control panel. Configure the size and media type for the tray.
UNABLE TO STORE JOB <JOBNAME>	A job cannot be stored because of a memory, disk, or configuration problem.	**1.** Install additional memory in the printer, or install a disk drive in the printer. See “Firmware DIMM” on page 160. **2.** If a disk drive is installed, delete the previously stored print jobs to increase the disk storage space. **3.** If this error persists, check the printer driver and application program settings.
USE INSTEAD? TRAY X: <TYPE> <SIZE>	The printer is offering the closest selection of alternative media to use for the print job.	To choose the alternative, press the SELECT (✓) button. Use the UP ARROW (▲) button and the DOWN ARROW (▼) button to scroll to any alternative selection, and then press the SELECT (✓) button to select it.

Download Free Service Manual at http://printer1.blogspot.com

Numerical printer messages

Table 42. Numerical printer messages

Message	Description	Action
10.00.00 SUPPLIES MEMORY ERROR or 10.10.00 SUPPLIES MEMORY ERROR For help press **?**	The printer is unable to read the electronic information (e-label) on the print cartridge so that the printer can keep track of the page count for the print cartridge. **XX Description** 00 memory error on the cartridge 10 memory device not found **YY Description** 00 black print cartridge	**1.** Open the top cover, remove the print cartridge, and reinstall it. See "Print cartridge" on page 137. **2.** Install a new HP print cartridge. **3.** Check the connection between the DC controller PCA (location J97) and the memory chip on the print cartridge (location J600). **4.** Replace the memory chip cable and contact assembly. **5.** Replace the DC controller PCA. See "DC controller PCA" on page 181.
13.XX.YY DUPLEX JOB INTERRUPTED For help press **?** alternates with 13.XX.YY DUPLEX JOB INTERRUPTED DISCARD TOP SHEET AND PRESS ✓ or 13.XX.YY DUPLEX JOB INTERRUPTED DISCARD TOP TWO SHEETS AND PRESS ✓	A duplex job was physically interrupted as the paper was momentarily routed to the output bin during duplexing. This error is usually caused by a user attempting to grasp the edge of the page as it exists the top output bin during the duplexing process.	**1.** Press the HELP (**?**) button for more information. **2.** Remove the specified number of pages from the output bin. **3.** Press the SELECT (✓) button to continue printing. **4.** Replace the duplexer. **5.** Replace the DC controller PCA. See "DC controller PCA" on page 181. **NOTE**: IF JAM RECOVERY = OFF some pages will not be reprinted. Resend the missing pages.

Download Free Service Manual at http://printer1.blogspot.com

Table 42. Numerical printer messages (continued)

Message	Description	Action
13.XX.YY JAM For help press ?	A jam exists in the media path.	**1.** Press the HELP (?) button for detailed information about clearing the jam. **2.** Press the UP ARROW (▲) button and the DOWN ARROW (▼) button to step through the instructions. **3.** If the media is folding into an accordion shape, make sure the shutter on the print cartridge opens as you insert the cartridge. Replace any defective print cartridge. **4.** For information about how to resolve a jam, see the specific numerical error codes in this table (the following 13.XX.YY error codes are not in numerical sequence). **5.** See "Paper-path troubleshooting" on page 295 in this chapter.

Download Free Service Manual at http://printer1.blogspot.com

Table 42. Numerical printer messages (continued)

Message	Description	Action
13.01.00. or 13.03.00 JAM IN TRAY X For help press **?** or 13.03.00 PAPER JAM OPEN INPUT TRAYS THEN OPEN AND CLOSE TOP COVER	A page is jammed in tray *X*. A 13.01.00 error message indicates that the media did not arrive at the pre-feed sensor (PS102) within the specified time. A 13.03.00 error message indicates that the media did not arrive at the top-of-page sensor (PS103) within the specified time. **NOTE**: The 13.01.00 error can also be caused by the failure of the paper-level sensor (PS107). If this sensor fails, the lifter motor does not rotate to lift the paper tray plate. This error can also be caused when the printer attempts to pickup media from a tray that is empty, but the paper-out sensing mechanism for that tray has failed and the printer senses that the tray appear to be loaded.	**1.** Press the HELP (**?**) button for detailed information about clearing the jam. **2.** Press the UP ARROW (▲) button and the DOWN ARROW (▼) button to step through the instructions. **3.** Check that the paper-out sensor in the specified tray is functioning properly. **4.** Clean the pickup roller. If it is worn or damaged, replace it. **5.** Clean the feed and separation rollers. If they are worn or damaged, replace them (always replace both rollers at the same time). **6.** Verify that the pre-feed sensor (PS102) is installed correctly. See "Correctly install the paper-feed assembly sensor flag" on page 197. **7.** Open and close the specified tray while watching the control-panel display. A short delay should occur between when the tray closes and the tray-size message appears on the control-panel display. If there is no delay and you do not hear the tray-lift motor lift the tray plate into place, replace the tray's stack position sensor (PS107, PS802, or SR2). See "Printer switches and sensors" on page 336, "500-sheet feeder switches, sensors, solenoids, and PCAs" on page 340, or "1,500-sheet feeder switches, sensors, solenoids, and PCAs" on page 343. **8.** Replace the tray *X* pickup solenoid. **9.** Replace the tray 1 paper-pickup assembly. See "Tray 1 paper-pickup assembly" on page 192. **10.** Replace the paper-feed assembly. See "Paper feed assembly" on page 195.

Download Free Service Manual at http://printer1.blogspot.com

Table 42. Numerical printer messages (continued)

Message	Description	Action
CONTINUED 13.01.00. or 13.03.00 JAM IN TRAY X For help press **?** or 13.03.00 PAPER JAM OPEN INPUT TRAYS THEN OPEN AND CLOSE TOP COVER	**CONTINUED**	**CONTINUED** **11.** Verify that the top-of-page sensor (PS103) is operating correctly and that the sensor flag can freely move. Replace the sensor if it is not operating correctly. See "Printer switches and sensors" on page 336. **12.** Replace the DC controller PCA. See "DC controller PCA" on page 181.
13.02.00 or 13.05.00 or 13.20.00 or 13.21.00 JAM IN TOP COVER AREA For help press **?**	A jam exists in the top-cover area. A 13.02.00 error message indicates that the media did not pass the top-of-page sensor (PS103) within the specified time. A 13.05.00 error message indicates that the media did not arrive at the fuser delivery sensor (PS108) within the specified time. A 13.20.00 error message indicates that the printer power was turned on or that the printer attempted to initialize while the pre-feed sensor (PS102), the top of page sensor (PS102) and/or the fuser delivery sensor (PS108) was detecting media. A 13.21.00 error message indicates that the top cover open switch (SW101) was activated while a print job was printing (the top cover was opened or the switch is defective).	**1.** Press the HELP (**?**) button for detailed information about clearing the jam. **2.** Press the UP ARROW (▲) button and the DOWN ARROW (▼) button to step through the instructions. **3.** Check the pre-feed, top-of-page, and fuser assembly sensors (PS102, PS103 and PS 108) and verify that the sensor arms move freely. (sSe "Location of printer switches and sensors" on page 336.) **4.** If the paper-feed assembly has been replaced, verify that the pre-feed sensor (PS102) is installed correctly. See "Correctly install the paper-feed assembly sensor flag" on page 197. **5.** Replace the top-of-page sensor (PS103). See "Location of printer switches and sensors" on page 336. **6.** Replace the top-cover-open switch (SW101). See "Location of printer switches and sensors" on page 336. **7.** Replace the fuser (PS108). See "Fuser" on page 162. **8.** Replace the DC controller PCA. See "DC controller PCA" on page 181. **9.** If this error message appears frequently, see "Paper-path troubleshooting" on page 295.

Download Free Service Manual at http://printer1.blogspot.com

Table 42. Numerical printer messages (continued)

Message	Description	Action
13.06.00 and 13.12.00 JAM INSIDE REAR DOOR For help press ?	A page is jammed near the rear output door.	**1.** Press the HELP (?) button for detailed information about clearing the jam. **2.** Press the UP ARROW (▲) button and the DOWN ARROW (▼) button to step through the instructions. **3.** Check the paper width and fuser delivery sensors (PS106, PS108) and verify that the sensor arms move freely. (See "Location of printer switches and sensors" on page 336.) **4.** Check the inside of the duplexer for scraps of media that might have torn off when a jam was cleared. **5.** Replace the media-size sensor (PS106) and fuser. See "Location of printer switches and sensors" on page 336 and "Fuser" on page 162. **6.** Turn the power off. Remove the duplexer and turn the power on. If the error message persists, replace the DC controller PCA. See "DC controller PCA" on page 181. **7.** Replace the fuser (PS108). See "Fuser" on page 162. **8.** If the error message appears frequently, see "Paper-path troubleshooting" on page 295.

Download Free Service Manual at http://printer1.blogspot.com

Table 42. Numerical printer messages (continued)

Message	Description	Action
13.12.07 JAM IN STAPLER **Note**: The stapler/stacker LED blinks in amber (this error applies to the stapler/stacker only).	There is a jam in the stapler cartridge (the stapler did not finish stapling but its motor was able to return to its home position).	**1.** Press the HELP (**?**) button for detailed information. **2.** Press the UP ARROW (▲) button and the DOWN ARROW (▼) button to step through the instructions. **3.** Remove any jammed paper from the stapler/stacker. **4.** Remove the staple cartridge from the stapler unit. **5.** Push the green door on the end of the staple cartridge up (in the direction of the arrows). **6.** Remove the jammed staple. **7.** Close the staple cartridge door. Replace the cartridge in the stapler unit. **8.** Close the staple unit. **9.** If the error persists, replace the staple cartridge. **10.** If the error persists, replace the stapler unit. See "Removing and replacing the stapler unit" on page 60.
13.12.08 JAM IN OUTPUT DEVICE **Note**: The stapler/stacker LED blinks in amber (this error applies to the stapler/stacker only).	The output bin page-detection sensor has been active for longer than the specified time.	**1.** Press the HELP (**?**) button for detailed information. **2.** Press the UP ARROW (▲) button and the DOWN ARROW (▼) button to step through the instructions. **3.** Remove all of the pages from the output bin. **4.** Open the jam-access door and remove all of the pages. Close the access door. **5.** If this error message persists, replace the stapler/stacker.
13.12.09 JAM IN OUTPUT DEVICE For help press **?** **Note**: The stacker or stapler/stacker LED blinks in amber.	The stacker or staple/stacker inlet sensor has been active for longer than a specified time.	**1.** Press the HELP (**?**) button for detailed information. **2.** Press the UP ARROW (▲) button and the DOWN ARROW (▼) button to step through the instructions **3.** Open the jam-access door and remove all of the pages. Close the access door. **4.** If this error message persists, replace the stacker or stapler/stacker.

Download Free Service Manual at http://printer1.blogspot.com

Table 42. Numerical printer messages (continued)

Message	Description	Action
13.12.10 JAM IN OUTPUT DEVICE For help press ? The event log records this error message as 13.12.0A **Note**: The stacker or stapler/stacker LED blinks in amber.	A page did not arrive at the stacker or staple/stacker inlet sensor in the specified time.	**1.** Press the HELP (?) button for detailed information. **2.** Press the UP ARROW (▲) button and the DOWN ARROW (▼) button to step through the instructions **3.** Open the jam-access door and remove all of the pages. Close the access door. **4.** Verify that the output bin deflector (in the printer) is operating correctly. **5.** If this error message persists, replace the stacker or stapler/stacker.
13.12.11 JAM IN OUTPUT DEVICE For help press ? The event log records this error message as 13.12.0B **Note**: The stacker or stapler/stacker LED blinks in amber.	A jam was detected when the stacker or stapler/stacker power was turned on.	**1.** Press the HELP (?) button for detailed information. **2.** Press the UP ARROW (▲) button and the DOWN ARROW (▼) button to step through the instructions. **3.** Remove all of the pages from the output bin. **4.** Open the jam-access door and remove all of the pages. Close the access door. **5.** If this error persists, replace the stacker or the stapler/stacker.
13.13.00 JAM INSIDE DUPLEXER For help press ?	A page is jammed inside of the duplexer.	**1.** Press the HELP (?) button for detailed information about clearing the jam. **2.** Press the UP ARROW (▲) button and the DOWN ARROW (▼) button to step through the instructions. **3.** Check the inside of the duplexer for scraps of media that might have been torn off when a jam was cleared. **4.** Turn the power off. Remove the duplexer and turn the power on. If this error persists, replace the DC controller PCA. See "DC controller PCA" on page 181. **5.** Replace the duplexer.
13.1C.00 FUSER JAM For help press ?	A jam exists in the fuser area. The media is probably wrapped around the fuser roller.	**1.** Remove the fuser. **2.** Turn the blue knob to remove the jammed media. **3.** If necessary, replace the fuser. See "Fuser" on page 162.

Download Free Service Manual at http://printer1.blogspot.com

Table 42. Numerical printer messages (continued)

Message	Description	Action
13.98.00 OPEN INPUT TRAYS THEN OPEN AND CLOSE TOP COVER	• The face-up tray was opened when the printer was attempting to send a page to the duplexer. • A page shorter than 200 mm (7.87 inches) was sent to the duplexer. • A page less than 120 mm (4.72 inches) in width was sent to the duplexer. • A multi-feed paper jam has occurred.	**1.** Remove any jammed media from the paper path. **2.** Open and close the top cover. **3.** Disconnect all optional paper-handling accessories. **4.** Replace the feed and separation rollers. See "Tray 2 feed rollers" on page 141 (this procedure includes the separation roller). **5.** Replace the DC controller PCA. See "DC controller PCA" on page 181
20 INSUFFICIENT MEMORY For help press ? alternates with 20 INSUFFICIENT MEMORY To continue press ✓	The printer has received more data from the computer than fits in the available memory.	**1.** Press the SELECT (✓) button to resume printing. **Note**: A loss of data will occur. **2.** Reduce the complexity of the print job to avoid this error. **3.** You might be able to print pages that are more complex if you add memory to the printer.
21 PAGE TOO COMPLEX For help press ? alternates with 21 PAGE TOO COMPLEX To continue press ✓	The printer cannot process the page quickly enough.	**1.** Press the SELECT (✓) button to process the page. **Note**: A loss of data will occur. **2.** Make the page contents less complex and re-send the print job.
22 EIO X BUFFER OVERFLOW To continue press ✓	The printer's EIO card in slot *X* has overflowed its I/O buffer during a busy state.	**1.** Press the SELECT (✓) button to resume printing. **Note**: A loss of data will occur. **2.** Check the configuration of the EIO card and the host computer. **3.** If this error message persists, replace the EIO card.
22 PARALLEL I/O BUFFER OVERFLOW For help press ? alternates with 22 PARALLEL I/O BUFFER OVERFLOW To continue press ✓	The printer's parallel buffer has overflowed during a busy state.	**1.** Press the SELECT (✓) button to resume printing. **Note**: A loss of data will occur. **2.** Check the parallel I/O configuration. Set HIGH SPEED to NO and ADVANCED FUNCTIONS to OFF. **3.** Replace the formatter PCA. See "Formatter assembly" on page 161.

Download Free Service Manual at http://printer1.blogspot.com

Table 42. Numerical printer messages (continued)

Message	Description	Action
40 EIO X BAD TRANSMISSION To continue press ✓	A connection with the card in EIO slot *X* has been broken abnormally.	**1.** Press the SELECT (✓) button to resume printing. **Note**: A loss of data will occur. **2.** Check that all of the cables are connected to the EIO ports and that the EIO board is seated properly. **3.** If possible, print to another network printer to verify the network is working properly. **4.** Check the configuration of the EIO card. **5.** If this error message persists, replace the EIO card.
41.3 UNEXPECTED SIZE IN TRAY XX For help press ? alternates with 41.3 LOAD TRAY XX: [TYPE] [SIZE] For help press ?	The media that is loaded is longer or shorter in the feed direction than the size that is configured for the tray.	**1.** If the incorrect size was selected, cancel the job or press the HELP (?) button to gain access to help. **2.** Press the UP ARROW (▲) button and the DOWN ARROW (▼) button to step through the instructions. **3.** Print a configuration page and verify that the tray settings match the media in the tray. See "Configuration page" on page 241. **4.** Verify that the pre-feed, top-of-page, and fuser delivery- sensors (PS102, PS103, PS108) are operating and the sensor flags can move freely. See "Location of printer switches and sensors" on page 336. **5.** Replace the DC controller PCA. See "DC controller PCA" on page 181.
41.X PRINTER ERROR For help press ? S alternates with 41.X PRINTER ERROR To continue press ✓	A printer error has occurred. **X Description** 1 unknown misprint error 2 beam-detect misprint error 4 no VSYNC error 7 feed-delay error 9 signal-noise error	**1.** Press the SELECT (✓) button to continue or press the HELP (?) button for more information. **2.** If the message persists, turn the printer power off and then on again. **3.** If these errors becomes a frequent problem, replace the DC controller PCA. See "DC controller PCA" on page 181

Download Free Service Manual at http://printer1.blogspot.com

Table 42. Numerical printer messages (continued)

Message	Description	Action
49.XXXX PRINTER ERROR To continue turn off then on	A critical firmware error has occurred that caused the processor on the formatter to abort the operation. This type of error can be caused by invalid print commands, corrupt data, or invalid operations. In some instances, electrical noise in the cable can corrupt data during transmission to the printer. Other causes include poor-quality parallel cables, poor connections, or specific applications. Sometimes, the formatter itself is at fault, which is usually indicated by a 79 SERVICE ERROR.	**1.** Press CANCEL JOB to clear the print job from the printer memory. **2.** Turn the printer off and then on. **3.** Go to htpp://www.hp.com/support/LJ4200 or htpp://www.hp.com/support/LJ4300. Select *Download Drivers and Software*. Check for the latest firmware image version at the bottom of the page. If this firmware image is newer than the one installed on your printer and your printer can receive a firmware update, download the newer firmware upgrade. Not all HP LaseJet 4200/4300 printers can receive firmware upgrades. **4.** Try printing a job from a different software program. If the job prints, go back to the first program and try printing a different file. If the message appears only with a certain software program or print job, contact the software vendor for assistance. **5.** If the message persists when using different software programs and attempting specific print jobs, disconnect all cables that connect the printer to the network or a computer. **6.** Turn the printer off. **7.** Remove all memory DIMMs or third-party DIMMs from the printer. (Do not remove the firmware DIMM in slot J1.) See "Firmware DIMM" on page 160. **8.** Remove all of the EIO devices from the printer. **9.** Turn the printer on. **10.** If the error message disappears, reinstall each DIMM and EIO device individually, making sure to turn the printer power off and then on again as you install each device. To replace a DIMM, see figure 98 on page 160.

Download Free Service Manual at http://printer1.blogspot.com

Table 42. Numerical printer messages (continued)

Message	Description	Action
Continued 49.XXXX PRINTER ERROR	**Continued**	**Continued** **11.** Replace the DIMM or EIO device caused the error message. **12.** Remember to reconnect all of the cables that connect the printer to the network or computer. **13.** If this error message persists, replace the firmware DIMM. See "Firmware DIMM" on page 160. **14.** Replace the formatter assembly. See "Formatter assembly" on page 161
49.24.02 PRINTER ERROR	The printer has experienced a critical error.	**1.** Verify that the ribbon cables are fully seated in the connectors on the DC controller PCA. **2.** Replace the power supply. See "Power supply" on page 188. **3.** Replace the DC controller PCA. See "DC controller PCA" on page 181. **4.** Replace the formatter assembly. See "Formatter assembly" on page 161.
50.X FUSER ERROR For help press **?**	A fuser error has occurred. **X Description** 1 low fuser temperature 2 fuser warmup service 3 fuser over temperature 4 faulty fuser 5 incorrect fuser is installed 6 open fuser circuit	**1.** Turn the printer off and allow it to cool down. **2.** Verify that the correct model of fuser is installed. **3.** Verify that the correct voltage fuser is installed. **4.** Reinstall the fuser, and check the connection between the fuser and the printer. Replace the connector if it is damaged. **5.** Replace the fuser. **6.** Replace the DC controller PCA. See "DC controller PCA" on page 181. **7.** Replace the power supply. See "Power supply" on page 188.

Download Free Service Manual at http://printer1.blogspot.com

Table 42. Numerical printer messages (continued)

Message	Description	Action
51.XY PRINTER ERROR For help press **?** alternates with 51.XY PRINTER ERROR To continue turn off then on	A printer error has occurred. **X Description** 1 beam-detect error 2 laser error	**1.** Press the SELECT (✓) button to continue. **2.** Turn the printer off and then on. **3.** Reseat the connectors between the laser/scanner and DC controller PCA (J83 and J84). **4.** Replace the laser/scanner assembly. See "Laser/scanner assembly" on page 173. **5.** Replace the DC controller PCA. See "DC controller PCA" on page 181.
52.XY PRINTER ERROR For help press **?** alternates with 52.XY PRINTER ERROR To continue turn off then on	A printer error has occurred. **X Description** 0 scanner error 1 scanner startup error 2 scanner rotation error	**1.** Press the SELECT (✓) button to continue. **2.** Turn the printer off and then on. **3.** Reseat the connectors between the laser/scanner and DC controller PCA (J83 and J84). **4.** Replace the laser/scanner assembly. See "Laser/scanner assembly" on page 173. **5.** Replace the DC controller PCA. See "DC controller PCA" on page 181.
53.XY.ZZ PRINTER ERROR To continue press cancel job	An error occurred in the printer memory. **X DIMM Type** 0 ROM (firmware DIMM) 1 RAM **Y Device Location** 1 DIMM Slot 1 2 DIMM Slot 2 3 DIMM Slot 3 4 DIMM Slot 4 **ZZ Error Number** 0 unsupported memory 1 unrecognized memory 2 unsupported memory size 3 failed RAM test 4 exceeded maximum RAM size 6 invalid DIMM speed	Press CANCEL JOB. If the problem persists, replace the DIMM card in the specific slot. See figure 98 on page 160.
54.1 REMOVE THE SEALING TAPE FROM TONER CARTRIDGE	The print cartridge was installed with the sealing tape in place.	**1.** Remove the sealing tape from the print cartridge. **2.** Replace the print cartridge.

Download Free Service Manual at http://printer1.blogspot.com

Table 42. Numerical printer messages (continued)

Message	Description	Action
55.X PRINTER ERROR For help press **?** alternates with 55.X PRINTER ERROR To continue press ✓	The DC controller is not communicating with the formatter. The problem could be caused by a timing error or an intermittent connection.	**1.** Press the SELECT (✓) button to continue. **2.** Turn the printer off and then on. **3.** Reseat the connectors between the DC controller PCA and the formatter. **4.** If the problem persists, replace the DC controller PCA. See "DC controller PCA" on page 181. **5.** Replace the formatter. See "Formatter assembly" on page 161.
56.1 PRINTER ERROR To continue turn off then on	Unknown input device installed.	**1.** Turn the power off and then on. **2.** Reinstall all paper input trays. **3.** Remove all non-HP paper-handling devices.
56.2 PRINTER ERROR To continue turn off then on	Unknown output device installed.	**1.** Turn the power off and then on. **2.** Reinstall the stacker or stapler/stacker. **3.** Remove all non-HP paper-handling devices.

Download Free Service Manual at http://printer1.blogspot.com

Table 42. Numerical printer messages (continued)

Message	Description	Action
57.X PRINTER ERROR To continue turn off then on or 57.3 EP FAN FAILURE or 57.4 MAIN FAN FAILURE	A printer fan is not functioning. **X Description** 3 EP cartridge fan, right side (LJ 4300 only) 4 Main cooling fan, left side	Turn the printer off and then on. **57.3 Cartridge fan error (F2)** **1.** Reconnect the connector between the fan and the DC controller PCA (location J78). **2.** Replace the fan. See "Cooling fan (right side; HP LaserJet 4300 series printer only)" on page 170. **3.** Replace the DC controller PCA. See "DC controller PCA" on page 181. **57.4 Main fan error (F1)** **1.** Reconnect the connector between the fan and the power supply. **2.** Verify that the ribbon cables are fully seated in the connectors on the DC controller PCA. **3.** Replace the fan. See "Main cooling fan (left side)" on page 168. **4.** Replace the power supply. See "Power supply" on page 188. **5.** Replace the DC controller PCA. See "DC controller PCA" on page 181.
57.7 DUPLEX FAN FAILURE	The cooling fan in the optional duplexer is not functioning.	**1.** Turn the printer off and then on. **2.** Replace the duplexer.

Download Free Service Manual at http://printer1.blogspot.com

Table 42. Numerical printer messages (continued)

Message	Description	Action
58.X PRINTER ERROR For help press **?** alternates with 58.X PRINTER ERROR To continue turn off then on	A memory error has been detected. **X Description** 2 air-temperature sensor 3 DC controller 4 power supply	**1.** Turn the printer off and then on. **58.2 Air temperature sensor** **1.** Turn the printer off and then on. **2.** Reconnect the connector between the air temperature sensor (the bar mounted across the main cooling fan on the left side of the printer) and the power supply (location J63). **3.** Replace the air-temperature sensor. See "Main cooling fan (left side)" on page 168. **4.** Replace the power supply. See "Power supply" on page 188. **58.3 DC controller** **1.** Replace the DC controller PCA. See "DC controller PCA" on page 181. **58.4 Power supply** **1.** Replace the power supply. See"Power supply" on page 188.

Download Free Service Manual at http://printer1.blogspot.com

Table 42. Numerical printer messages (continued)

Message	Description	Action
59.XY PRINTER ERROR For help press **?** alternates with 59.XY PRINTER ERROR To continue turn off then on	A printer-motor error has occurred. **X Description** 0 main-motor error 1 motor startup error 2 motor rotation error 4 EP-motor error (LJ 4300 only) A EP-motor error (LJ 4300 only) **Y Description** Y = 0	**59.00, 59.10, 59.20 Motor failure** **1.** Turn the printer off and then on. **2.** Reconnect the main-motor wire-harness on the DC controller PCA (location J98) **3.** Replace the main motor. See "Main motor" on page 177. **4.** Replace the DC controller PCA. See "DC controller PCA" on page 181. **59.A or 59.4 EP Motor failure (LJ 4300 only)** **1.** Turn the printer off and then on. **2.** Reconnect the EP-motor wire-harness on the DC controller PCA (location J86). **3.** Replace the print-cartridge motor. See "Print-cartridge motor (HP LaserJet 4300 series printer only)" on page 175. **4.** Replace the DC controller PCA. See "DC controller PCA" on page 181.
59.2 MAIN MOTOR ROTATION ERROR	The main motor is not functioning correctly.	**1.** Turn the printer off and then on. **2.** Reconnect the main-motor wire-harness on the DC controller PCA (location J98) **3.** Replace the main motor. See "Main motor" on page 177. **4.** Replace the DC controller PCA. See "DC controller PCA" on page 181.

Download Free Service Manual at http://printer1.blogspot.com

Table 42. Numerical printer messages (continued)

Message	Description	Action
59.4 EP MOTOR ROTATION ERROR (LJ 4300 only)	The print-cartridge drive motor (LJ 4300 only) is not functioning properly.	**1.** Turn the printer off and then on. **2.** Replace the print cartridge. **3.** Reconnect the EP-motor wire-harness on the DC controller PCA (location J86). **4.** Replace the EP motor. See "Print-cartridge motor (HP LaserJet 4300 series printer only)" on page 175. **5.** Replace the DC controller PCA. See "DC controller PCA" on page 181.
60.2 PRINTER ERROR	The tray 2 lifter-motor is not functioning.	**1.** Turn the printer off and then on. **2.** If the error persists. turn the printer off. **3.** Verify that the tray 2 lifter wire-harness is full seated in its connector on the DC controller PCA (location J93). **4.** Replace the tray 2 lifter-driver assembly. See "Tray 2 lifter-drive assembly" on page 179. **5.** Replace the DC controller PCA. See "DC controller PCA" on page 181.
60.3 TRAY 3 LIFTER MOTOR FAILURE	The tray 3 lifter-motor is not functioning. Tray 3 can be a 500-sheet feeder or 1,500-sheet feeder accessory.	**1.** Turn the printer off and then on. **2.** If the error persists. turn the printer off. **3.** Verify that the tray 3 lifter wire-harness is fully seated in its connector on the sheet feeder PCA. **4.** Replace the tray 3 lifter-driver assembly. See "500-sheet feeder lifter-drive assembly" on page 209 or "1,500-sheet feeder lifter-drive assembly" on page 222. **5.** Replace the tray 3 feeder controller PCA. See "500-sheet feeder control PCA" on page 207 or "1,500-sheet feeder control PCA" on page 220.

Download Free Service Manual at http://printer1.blogspot.com

Table 42. Numerical printer messages (continued)

Message	Description	Action
60.4 TRAY 4 LIFTER MOTOR FAILURE	The tray 4 lifter-motor is not functioning. Tray 4 can be a 500-sheet feeder or 1,500-sheet feeder accessory.	**1.** Turn the printer off and then on. **2.** If the error persists. turn the printer off. **3.** Verify that the tray 4 lifter wire-harness is fully seated in its connector on the sheet feeder PCA. **4.** Replace the tray 4 lifter assembly. See "500-sheet feeder lifter-drive assembly" on page 209 or "1,500-sheet feeder lifter-drive assembly" on page 222. **5.** Replace the tray 4 feeder controller PCA. See "500-sheet feeder control PCA" on page 207 or "1,500-sheet feeder control PCA" on page 220.
62 NO SYSTEM To continue turn off then on	No system (firmware image) was found.	**1.** Turn the printer off and then on. **2.** Reseat the firmware DIMM, in slot J1. See "Firmware DIMM" on page 160. **3.** Replace the firmware DIMM. See "Firmware DIMM" on page 160. **4.** Replace the formatter assembly. See "Formatter assembly" on page 161.
64 PRINTER ERROR For help press **?** alternates with 64 PRINTER ERROR To continue turn off then on	A scan-buffer error has occurred.	**1.** Turn the printer off and then on. **2.** If the message persists, replace the formatter assembly. See "Formatter assembly" on page 161.
66.00.15 EXTERNAL DEVICE FAILURE **Note**: The stacker or stapler/stacker LED is off	The stacker or stapler/stacker was removed and then replaced while the printer power was on.	**1.** Turn the printer power off. **2.** Verify that the stacker or stapler/stacker is installed correctly. **3.** Turn the printer power on.

Download Free Service Manual at http://printer1.blogspot.com

Table 42. Numerical printer messages (continued)

Message	Description	Action
66.12.XX OUTPUT DEVICE FAILURE For help press ? **Note**: The stacker or stapler/stacker LED is continuously illuminated in amber.	A stacker or stapler/stacker error has occurred. **XX Description** 01 output-lift roller or paddle motor error 02 jogger-motor error 03 stapler-motor error	**1.** Press the HELP (?) button for detailed information. **2.** Press the UP ARROW (▲) button and the DOWN ARROW (▼) button to step through the instructions. **3.** Turn the power off. **4.** Verify that the stapler/stacker is installed correctly and that its electrical connector is seated in the connector on the printer. **5.** Turn the power on. **6.** If the error 66.12.03 persists, replace the stapler unit. See "Removing and replacing the stapler unit" on page 60. **7.** If other errors messages persist, replace the stacker or stapler/stacker.
68.X PERMANENT STORAGE ERROR For help press ? alternates with 68.X PERMANENT STORAGE ERROR To continue press ✓	One or more printer settings that were saved in the nonvolatile storage device are invalid and have been reset to the factory default. Pressing the SELECT (✓) button should clear the message. Printing can continue, but behave unexpected in response to the changed settings. **X Description** 0 onboard NVRAM 1 flash DIMM or hard drive	**1.** Press the SELECT (✓) button to continue. **2.** Turn the printer off and then on. **3.** Check the printer settings to determine which settings have been changed. See "Settings and defaults" on page 38 and "Control-panel menus" on page 39. **4.** Perform a NVRAM initialization. See "NVRAM initialization" on page 251. **5.** Replace the formatter assembly. See "Formatter assembly" on page 161

Download Free Service Manual at http://printer1.blogspot.com

Table 42. Numerical printer messages (continued)

Message	Description	Action
68.X PERMANENT STORAGE FULL For help press ? alternates with 68.X PERMANENT STORAGE FULL To continue press ✓	A nonvolatile storage device is full. Pressing the SELECT (✓) button should clear the message. Printing can continue, but behave unexpected in response to the changed settings. **X Description** 0 onboard NVRAM 1 flash DIMM or hard drive	**1.** Press the SELECT (✓) button to continue. **2.** For **68.0** errors, turn the printer off and then on. **3.** If a 68.0 error persists, Initialize NVRAM. See the caution and note in "To initialize NVRAM" on page 251. **4.** For **68.1** errors, use the HP Web Jetadmin software to delete files from the disk drive. **5.** If this error message persists, replace the formatter assembly. See "Formatter assembly" on page 161. **6.** If the 68.1 error persists, reinitialize the hard disk. See the caution and note in "To initialize the hard disk" on page 252. **7.** If the 68.1 error persists, replace the disk.
68.X PERMANENT STORAGE WRITE FAIL To continue press ✓	A nonvolatile storage device is failing to write. Pressing the SELECT (✓) button should clear the message. Printing can continue, but behave unexpected in response to the changed settings. **X Description** 0 onboard NVRAM 1 removable disk (flash or hard)	**1.** Press the SELECT (✓) button to continue. **2.** Turn the printer off and then back on. **3.** If the 68.0 error persists, initialize the NVRAM. See the caution and note in "To initialize NVRAM" on page 251. **4.** If this error message persists, replace the formatter assembly. See "Formatter assembly" on page 161. **5.** For a 68.1 error message reinitialize the hard disk. See the caution and note in "To initialize the hard disk" on page 252. **6.** If the 68.1 error persists, replace the disk.
69.X PRINTER ERROR To continue turn off then on	The optional duplexer is not functioning.	**1.** Remove the duplexer. **2.** Turn the printer off and then on. **3.** Replace the duplexer. **4.** If the message persists, replace the duplexer.

Download Free Service Manual at http://printer1.blogspot.com

Table 42. Numerical printer messages (continued)

Message	Description	Action
79.XXXX PRINTER ERROR To continue turn off then on	A critical hardware error has occurred.	**1.** Turn the printer off and then on. **2.** If the problem persists, reseat the firmware DIMM. **3.** Reseat the formatter. **4.** Go to htpp://www.hp.com/support/LJ4200 or htpp://www.hp.com/support/LJ4300. Select *Download Drivers and Software*. Check for the latest firmware image version at the bottom of the page. If this firmware image is newer than the one installed on your printer and your printer can receive a firmware update, download the newer firmware upgrade. Not all HP LaseJet 4200/4300 printers can receive firmware upgrades. **5.** Replace the formatter. See "Formatter assembly" on page 161. **6.** Replace the firmware DIMM. See "Firmware DIMM" on page 160.
8X.YYYY EIO ERROR	The EIO accessory card in slot *X* has encountered a critical error.	**1.** Turn the printer off and then on. **2.** If the problem persists, reseat the EIO card. **3.** Replace the EIO card. **4.** Replace the formatter assembly. See "Formatter assembly" on page 161.

Download Free Service Manual at http://printer1.blogspot.com

Paper-path troubleshooting

Overview

If a jam message appears on the printer control-panel display, look for jammed paper or other print media in the locations that are indicated in the following figure. Then see the tables in this section for information about clearing the jam. You might need to look for media in locations other than those specified in the jam message. If the location of the jam is not obvious, look first in the top-cover area underneath the print cartridge.

When clearing jams, be very careful not to tear the jammed media. If a small piece of media is left in the printer, it could cause additional jams. If jams are a recurring problem, see "Persistent jams" on page 298.

Note After you have cleared the jammed media, you must open and then close the top cover to clear a jam message.

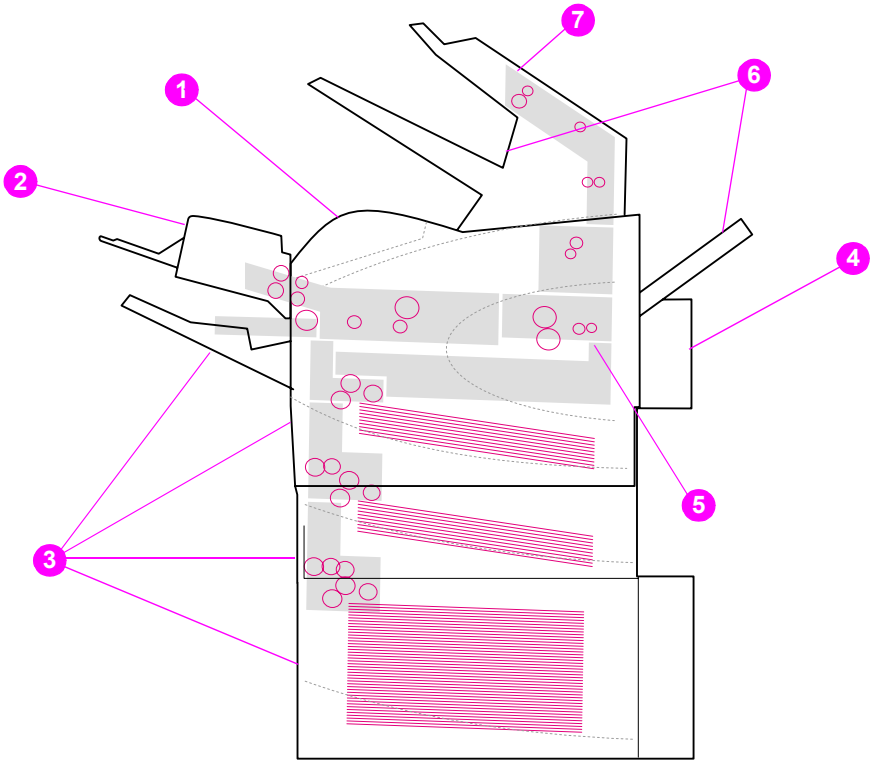

Figure 206. **Jam locations**

1. Top-cover and print-cartridge areas
2. Optional envelope feeder
3. Tray areas (tray 1, tray 2, and optional trays)
4. Optional duplexer
5. Fuser area
6. Output areas (top, rear, and optional stacker or stapler/stacker)
7. Optional stacker or stapler/stacker

Note Loose toner might remain in the printer after a jam and cause poor print quality. Print quality will improve after a few pages are printed.

Download Free Service Manual at http://printer1.blogspot.com

Paper-jam recovery

This printer can automatically provide paper-jam recovery. You can use the jam-recovery to automatically reprint jammed pages.

Select whether or not you want the printer to attempt to reprint jammed pages.

- AUTO Printer will attempt to reprint jammed pages.
- OFF Printer will not attempt to reprint jammed pages.

Hint To improve print speed and increase memory resources, you may want to disable paper jam recovery. If paper-jam recovery is disabled, the printer will not attempt to reprint the jammed pages.

Note During the recovery process, the printer might reprint several pages that were printed properly before the paper jam occurred. Be sure to remove any duplicated pages.

To disable the paper-jam recovery

1. Press the SELECT (✓) button to open the MENUS.
2. Press DOWN ARROW (▼) button to scroll to CONFIGURE DEVICE.
3. Press the SELECT (✓) button to select CONFIGURE DEVICE.
4. Press DOWN ARROW (▼) button to scroll to SYSTEM SETUP.
5. Press the SELECT (✓) button to select SYSTEM SETUP.
6. Press DOWN ARROW (▼) button to scroll to JAM RECOVERY.
7. Press the SELECT (✓) button to select JAM RECOVERY.
8. Press DOWN ARROW (▼) button to scroll to OFF.
9. Press the SELECT (✓) button to select OFF.
10. Press the PAUSE/RESUME button to return to the READY state.

Download Free Service Manual at http://printer1.blogspot.com

Avoiding paper jams

Use this table to help avoid specific types of paper jams

Table 43. Common causes of paper jams

Cause	Solution
The print media does not meet HP recommended media storage and use specifications.	Use only media that meets HP specifications. See chapter 1 in this manual or the *HP print media guide* (available at http://www.hp.com/support/ljpaperguide) for media recommendations.
A supply item is installed incorrectly, which causes repeated jams.	Verify that the print cartridge and the fuser are correctly installed.
You are reloading paper that has already passed through a printer or copier.	Do not use media that has been used previously in a printer or copier.
An input tray is loaded incorrectly.	Remove any excess media from the input tray. Make sure that the stack of media fits below the indicators inside of the tray.
The print media is skewed.	The tray guides are not adjusted correctly. Adjust the guides to hold the media firmly in place without bending it. If media heavier than 120 g/m^2 (32 lb) is loaded into tray 2, tray 3, or tray 4, the media might skew.
The print media is binding or sticking together.	Remove the media and flex it, rotate it 180 degrees, or flip it over. Reload the media into the tray. Do not fan media.
The print media is removed before it settles into the output bin.	Wait until the page completely exits the output delivery assembly before you attempt to remove the it.
When you are using the duplex print feature, the print media is removed before the second side of the document is printed.	Print the document again. During the duplex operation, the page will partially protrude from the output delivery assembly (when the page is being reversed). Do not attempt to grab or remove the page. Wait until the page completely exits the output delivery assembly before you attempt to remove the it.
The print media is in poor condition.	Replace the print media.
The print media is not picked up by the internal rollers from Trays 2, 3 or 4.	Remove the top sheet of media. If the media is heavier than 120 g/m^2 (32 lb), it might not be picked up properly from the tray.
The print media has rough or jagged edges.	Replace the media.
The print media is perforated or embossed.	If the media does not separate easily, you might need to feed single sheets from tray 1.
The printer supply items have reached the end of their useful life.	Check the printer control panel for messages that prompt you to replace supplies, or print a supplies status page to verify the remaining life of the supplies.
The print media was not stored correctly.	Replace the print media. The media should be stored in its original packaging and in a controlled environment.

Download Free Service Manual at http://printer1.blogspot.com

Persistent jams

If jams occur repeatedly, use the information in this section to diagnose the root cause of the problem. The tables in this section list possible causes and recommended solutions for jams in each area of the paper path. The information is listed in the order in which you conduct the investigation. In general, items at the beginning of the list are relatively minor repairs. Items at the end of the list are more significant repairs.

Basic troubleshooting for persistent jams

The basic troubleshooting process for jams consists of the following:

1. Gather data.
2. Identify the cause of the problem.
3. Fix the problem.

Data collection

To troubleshoot jams, gather the following information:

- the exact error code that appears on the control panel
- the location of the leading edge of all of the media that is in the paper path
- the location of the media when the jam occurs: in the paper path or if paper is stuck in the input tray
- the timing of the jam: at power-up or while paper is moving
- the location if any damage occurs on the media and the location in the paper path where the damaged media stops
- the relationship to a particular tray
- the relationship to duplex printing
- the relationship to the type of paper
- the use of any non-HP supplies (non-HP supplies are known to cause jams)
- paper-handling conditions, including correct storage, overloading trays, damaging media during loading, fanning of the paper ream, or use of paper that has already been fed through this printer, another printer, or a copier.

Download Free Service Manual at http://printer1.blogspot.com

General paper-path troubleshooting

Use the following information to isolate the cause of the problem. When you have identified the cause, use the tables that follow to find a recommended solution.

- View or print the event log to determine if a particular jam error occurs more often than others. Try to identify a pattern.
- View or print the event log, to determine the frequency of a particular jam. If a jam occurs repeatedly at a particular page count, consider this event to be a single jam that the customer tried to clear.
- Try printing from all of the available input trays and to all of the available output bins to identify whether the problem is isolated to one tray.
- Print the job in both simplex and duplex modes to identify whether the problem occurs only in one mode or the other.
- Try printing on paper from an unopened ream that has been stored correctly. If the jam does not occur with this media, then the customer's media might be causing the problem.
- If the jam occurs when the printer is first turned on, check the paper path for small, torn pieces of paper. Also check for broken sensors or flags, and check for loose or defective connections.
- If the paper is torn, folded, or wrinkled (typically along the leading edge), inspect the paper path for items that might be causing the damage.
- If the customer is using non-HP supplies, try replacing those supplies with genuine HP supplies to see if the problem is resolved.
- If necessary, explain the correct methods of media storage, media loading, and printer operation to the customer. Make sure the customer knows not to remove media from the output bin (during duplex printing) until it completely exits the output delivery assembly.

Paper-path checklist

- ❑ Verify that the media is correctly loaded in the input trays and that all length and width guides are set correctly.
- ❑ Clean the printer. Toner and paper dust in the paper path can inhibit free movement of the media through the printer and can block the sensors.
- ❑ Use the paper path-test on the **Diagnostic** menu to select various printer input and output options to determine if the problem is associated with a particular area of the printer.
- ❑ Worn rollers or separation pads can cause multifeeds. Check the condition of the rollers and separation pads.
- ❑ Defective paper-tray switches can cause jams by communicating the wrong paper size to the formatter.
- ❑ Defective paper sensors along the paper path might signal a false jam.
- ❑ Scraps of media that remain in the paper path can cause intermittent jams. Always check that the paper path is clear after cleaning the printer or clearing jams. Also, remove the fuser and carefully check it for debris.

Download Free Service Manual at http://printer1.blogspot.com

Paper-path test

This test generates one or more test pages that can be used to isolate the cause of jams.

To isolate a jam, you can specify which input tray to use, which output bin to use, specify whether to use the duplex path, and the number of pages to print. Printing multiple pages helps to isolate intermittent jam problems. The following options are available for this test.

- **Print test page**. This option uses factory default settings to run the paper path test. The page starts from tray 2, does not use the duplex path, and prints a single page. The user can specify the number of pages to be printed.
- **Source**. Use this option to select tray 1, tray 2, or tray *X* (if optional tray feeders are installed) as the page source.
- **Destination**. Use this option to send the test page to the optional stacker or stapler/stacker if this accessory is installed.
- **Duplex**. Use this option to send the test page through the duplex path.
- **Page count**. Use this option to sets the number of test page copies to be printed. The choices are 1, 10, 50, 100, or 500.

To perform a paper- test

1. Press the SELECT (✓) button to open the menus.
2. Use the UP ARROW (▲) button or the DOWN ARROW (▼) button to scroll to `DIAGNOSTICS`, and then press the SELECT (✓) button.
3. Use the UP ARROW (▲) button or the DOWN ARROW (▼) button to scroll to `PAPER PATH TEST`, and then press the SELECT (✓) button.
4. Use the UP ARROW (▲) button or the DOWN ARROW (▼) button to scroll through the available test options, and then press the SELECT (✓) button.
5. After the test options are selected, use the UP ARROW (▲) button or the DOWN ARROW (▼) button to scroll to `PRINT TEST PAGE`, and then press the SELECT (✓) button to start the test.

Note To test the stacker and stacker/stapler paper path, see "Stacker paper path test" on page 327 and "Stapler/stacker paper path test" on page 328.

Download Free Service Manual at http://printer1.blogspot.com

Jams in tray 1

Table 44. Causes of tray 1 jams

Cause	Solution
The pickup roller is dirty, worn, or damaged.	Clean the pickup roller. If it is dirty after cleaning, or if it is worn or damaged, replace the pickup roller.
The separation pad is dirty, worn, or damaged.	Clean the separation pad. If it is dirty after cleaning, or if it is worn or damaged, replace the separation pad.
The drive gears are damaged.	Check the drive gears in the tray 1 pickup assembly. Replace the pickup assembly if the gears are damaged.
The tray 1 pickup solenoid (SL102) is defective.	**1.** Disconnect the connector for the tray 1 pickup solenoid from the DC controller PCA (location J79). **2.** Measure the resistance between the cable connectors. **3.** If the measured resistance is *not* approximately 160 ohms, replace the tray 1 pickup solenoid.
The tray 1 pickup assembly is defective.	Replace the tray 1 paper-pickup assembly. See "Tray 1 paper-pickup assembly" on page 192.
The DC controller PCA is defective.	Replace the DC controller PCA. See "DC controller PCA" on page 181.

Jams in tray 2

Table 45. Causes of tray 2 jams

Cause	Solution
The feed or separation rollers are dirty, worn, or damaged.	Clean the rollers. If they are dirty after cleaning, or if they are worn or damaged, replace the rollers.
The pickup roller is worn or damaged.	Replace the pickup roller.
The tray 2 paper pickup assembly drive gears are damaged or the assembly is defective.	Check the drive gears in the paper pickup drive assembly. Replace the pickup drive assembly if the gears are damaged. See "Paper-pickup assembly," on page 183.
The tray 2 pickup solenoid (SL101) is damaged.	**1.** Disconnect the connector for the tray pickup solenoid from the DC controller PCA (location J92). **2.** Measure the resistance between the cable connectors. **3.** If the measured resistance is *not* approximately 160 ohms, replace the tray 2 pickup solenoid.
The tray 2 lifter-drive assembly or the stack position sensor (PS107) is defective.	Replace the lifter-drive assembly. See "Tray 2 lifter-drive assembly" on page 179 and/or "Printer switches and sensors" on page 336
The DC controller PCA is defective.	Replace the DC controller PCA. See "DC controller PCA" on page 181.

Download Free Service Manual at http://printer1.blogspot.com

Jams in tray 3 and/or tray 4

Table 46. Causes of tray 3 and or tray 4 jams

Cause	Solution
The feed or separation rollers are dirty, worn, or damaged.	Clean the rollers. If they are dirty after cleaning, or if they are worn or damaged, replace the rollers. See "500-sheet feed rollers" on page 204 and/or "1,500-sheet feeder feed rollers" on page 214 and "1,500-sheet feeder separation roller" on page 214.
The pickup roller is worn or damaged.	Replace the pickup roller.
The tray 3 or tray 4 paper pickup drive gears are damaged, or the assembly is defective.	Check the drive gears in the paper-pickup unit. Replace the pickup drive assembly if the gears are damaged. See "500-sheet feeder paper-pickup drive assembly" on page 210 and/or "1,500-sheet feeder paper-pickup drive assembly" on page 225.
The connector to the printer has poor contact.	Inspect the connector to the printer. Replace any damaged connectors.
The paper feeder pickup solenoid is damaged.	**1.** Disconnect the connector for the paper feeder solenoid from the feeder control PCA. **2.** Measure the resistance between the cable connectors. **3.** If the measured resistance is *not* approximately 160 ohms, replace the paper-feeder pickup solenoid. See "500-sheet feeder switches, sensors, solenoids, and PCAs" on page 340 and/or "1,500-sheet feeder switches, sensors, solenoids, and PCAs" on page 343.
The tray 3 or tray 4 lifter assembly or stack position sensor (PS802 or SR2) is defective.	Replace the lifter-drive assembly (500-sheet feeder) or the lifter-drive assembly (1,500-sheet feeder). See "500-sheet feeder lifter-drive assembly" on page 209 and/or "1,500-sheet feeder lifter-drive assembly" on page 222. Replace the surface stack sensor (PS802 for the 500-sheet feeder, or SR2 for the 1,500-sheet feeder. See "500-sheet feeder switches, sensors, solenoids, and PCAs" on page 340 and/or "1,500-sheet feeder switches, sensors, solenoids, and PCAs" on page 343.
The paper feeder control PCA is defective.	Replace the paper-feeder control PCA. See "500-sheet feeder control PCA" on page 207 and "1,500-sheet feeder control PCA" on page 220.
The DC controller PCA is defective.	Replace the DC controller PCA. See "DC controller PCA" on page 181.

Download Free Service Manual at http://printer1.blogspot.com

Jams in the paper path

Table 47. Causes of paper-path jams

Cause	Solution
The cartridge shutter open/close mechanism is damaged.	The shutter in the print cartridge should open as you insert the print cartridge. If the shutter does not open, replace the print cartridge.
The registration roller is dirty, worn, or damaged. (This applies to jams that occur before the registration rollers.)	Clean the registration roller assembly if it is dirty. If it is dirty after cleaning, or if it is worn or damaged, replace the registration assembly. See "Registration assembly" on page 198.
The paper-feed assembly (including clutch CL101) might be damaged. (This applies to jams that occur before the registration rollers.)	Replace the paper feed assembly. See "Paper feed assembly" on page 195.
The drive gears are damaged. (This can cause jams that occur before media reaches the registration rollers.)	Check the drive gears in the paper pickup and main drive assemblies. Replace the pickup or main drive assemblies if the gears are damaged. See "Paper-pickup assembly," on page 183 and/or "Main drive assembly" on page 186.
The pre-feed (PS102), top-of-page (PS103), or fuser assembly (PS108) sensor(s) is defective.	Replace the sensor. See "Location of printer switches and sensors" on page 336.
The DC controller PCA is defective.	Replace the DC controller PCA. See "DC controller PCA" on page 181.

Note

Avoid using odd-sized media. Odd-sized media might not transport properly between the transfer roller and the fuser without getting jammed.

Avoid using short-grained paper. Short-grain paper might excessively curl and become jammed. This type of jam is often found between the fuser and the output destination or in the duplexer.

Jams in the duplex path

Table 48. Causes of duplex path jams

Cause	Solution
The oblique rollers are worn or damaged.	Replace the duplexer.
The oblique roller drive gears are worn or damaged.	Replace the duplexer.
The duplex feed guide is damaged.	Replace the duplexer.
The duplex sensors are defective.	Replace the duplexer.

Download Free Service Manual at http://printer1.blogspot.com

Media transport problems

If media is feeding incorrectly, use the information in this section to identify and resolve the problem.

Multiple pages feed

Table 49. Causes for multiple pages feeding

Cause	Solution
The tray 1 separation pad is worn.	Replace the separation-pad assembly.
Too much media (particularly envelopes) is loaded in tray 1.	Remove some of the media and resend the print job.
The separation rollers in the tray are worn or damaged	Replace the rollers. See "Tray 2 feed rollers" on page 141 for tray 2, or "500-sheet feed rollers" on page 204 for a 500-sheet feeder, or "1,500-sheet feeder feed rollers" on page 214 for a 1,500-sheet feeder.
The media edges are locked together.	Flex the media stack before loading it into the printer. *Do not* fan the media.

Paper is wrinkled or folded

Table 50. Causes for wrinkled or folded paper (part one, paper path entrance)

Cause	Solution
The feed rollers or registration rollers are dirty or defective.	Replace the affected rollers.
The paper path contains foreign substances or dirt.	Remove any foreign substances or dirt from the paper path.
The cartridge shutter open/close mechanism is damaged. (This can cause jams in which the media is crumpled into an accordion fold under the print cartridge.)	The shutter in the print cartridge should open as you insert the cartridge. If a shutter does not open, replace the print cartridge.

Table 51. Causes for wrinkled or folded paper (part two, paper path exit)

Cause	Solution
The fuser inlet guide is dirty.	Replace the fuser. See "Fuser" on page 162.
The fuser pressure roller is dirty or damaged.	Run several cleaning pages through the printer. See "Running the cleaning page manually" on page 56. If the problem persists, replace the fuser. See "Fuser" on page 162.

Download Free Service Manual at http://printer1.blogspot.com

Paper is skewed

Table 52. Causes for skewed paper

Cause	Solution
Paper dust or dirt has accumulated on the tray feed roller or separation roller.	Clean or replace the rollers.
The tray feed roller and separation roller are worn irregularly.	Replace the affected roller.
The registration assembly is defective.	Replace the registration assembly. See “Registration assembly” on page 198

Download Free Service Manual at http://printer1.blogspot.com

Image-formation troubleshooting

The image formation system is the central hub of the printer. During image formation, an image of toner is formed and then fused onto the paper. The image formation system consists of the following physical components:

- laser/scanner
- print cartridge
- fuser
- transfer roller
- Supporting circuitry (power supply and DC controller PCA)

Before beginning image formation troubleshooting, check that the media meets the specifications listed in chapter 1 and/or the *HP LaserJet Printer Family Print Media Guide.* See "Supported sizes and weights of media" on page 10 and "Supported types of media" on page 14.

Print quality problems associated with media

Some print quality problems arise from use of inappropriate media.

- Use paper that meets HP paper specifications. See the specifications listed in the *HP LaserJet Printer Family Print Media Guide.*
- The surface of the media is too smooth. Use media that meets HP paper specifications. See the specifications listed in the *HP LaserJet Printer Family Print Media Guide.*
- The driver/printer is set incorrectly. Change the paper type setting.
- The media you are using is too heavy for the printer, and the toner is not fusing to the media.
- The transparencies you are using are not designed for proper toner adhesion or high fusing temperatures. Use only transparencies designed for monochrome HP LaserJet printers.
- The moisture content of the paper is uneven, too high, or too low. Use paper from a different source or from an unopened ream of paper.
- Some areas of the paper reject toner. Use paper from a different source or from an unopened ream of paper. Make sure the paper has not been previously used.
- The letterhead you are using is printed on rough paper. Use a smoother, photocopy paper. If this solves your problem, consult with the printer of your letterhead to verify that the paper used meets the specifications for this printer.
- The paper is excessively rough. Use a smoother, photocopy paper.
- The paper has a coating that is not compatible with the electrophotographic process used by this printer.
- The letterhead or other pre-printed media was printed with inks or other materials that can contaminate the fuser which can cause offset or repeated images.
- The use of some carbonless papers can cause printer contamination and can cause printer damage if used repeatedly.

Download Free Service Manual at http://printer1.blogspot.com

Overhead transparency defects

Overhead transparencies may display any of the image quality problems that any other type of media will, as well as defects specific to printing on transparencies. In addition, because transparencies are pliable while in the print path, they are subject to being marked by the media-handling components.

Note Allow transparencies to cool at least 30 seconds before handling them.

- In the printer driver's **Paper** tab, select **Transparency** as the media type. Also, make sure that the tray is correctly configured for transparencies.
- Check that the transparencies meet the specifications for this monochrome LaserJet printer. For more information, consult the *HP LaserJet Printer Family Print Media Guide.*
- Handle transparencies by the edges. Skin oil on the surface of transparencies can cause spots and smudges.
- Small, random dark areas on the trailing edge of solid fill pages may be caused by transparencies sticking together in the output bin. Try printing the job in smaller batches.
- If you are using a reflective overhead projector, use a standard overhead projector instead.

Print quality problems associated with the environment

- The printer is operating in excessively humid or dry conditions. Verify that the printing environment is within specifications. See table 6 in "Environmental specifications" on page 7,

Print quality problems associated with jams

- Make sure that all media is cleared from the paper path.
- If the printer recently jammed, print two or three pages to clean the printer.
- Repeated jams may require the use of the printer cleaning procedures in chapter 4. It might be necessary to process several cleaning pages through the printer. See "Running the cleaning page manually" on page 56.

Download Free Service Manual at http://printer1.blogspot.com

Image defects

Overview

This section helps you define print-quality problems and what to do to correct them. Often print-quality problems can be handled easily by making sure that the printer is properly maintained, using print media that meets HP specifications, or running a cleaning page.

Note Do not use letterhead paper that is printed with low-temperature inks, such as those used in some types of thermography.

Do not use raised letterhead.

The printer uses heat and pressure to fuse toner to the paper. Make sure that any colored paper or preprinted forms use inks that are compatible with the printer's temperature of 230° C (446° F) for 0.05 second.

Avoid using paper that has been damaged due to having already been used in a printer or copier. (Do not print on both sides of envelopes, transparencies, or labels.)

Image quality

When you are working with customers, obtain a print sample before you begin troubleshooting their printer. Ask the customer to explain the quality expected from the printer. The print sample will also help clarify the image-quality issue.

Table 53. Image quality checks

Image quality checks	Action
Does the problem repeat on the page?	Use the repetitive defect table to determine the cause of the repeating defect. See "Repetitive defects troubleshooting" on page 325.
Is the print cartridge full and is it manufactured by HP?	Check the print cartridge as described in this chapter and verify that you are not using the EconoMode setting when sending the print job. See "Check the print cartridge" on page 309 and "EconoMode" on page 309.
Is the customer using print media that meets all HP paper specification standards?	For more information about HP's paper specification standards, see chapter 1 or the *HP LaserJet Printer Family Print Media Guide.* See "Supported sizes and weights of media" on page 10 and "Supported types of media" on page 14.
Is the print sample similar to those in the print quality tables that begin on page 311?	Compare the sample to the print quality tables in this chapter and perform the corresponding procedures that are recommended. See table 54 on page 311.
Is the problem with the print cartridge, the transfer roller, or the fuser?	Perform the half self-test functional check and the drum rotational functional check to determine the location of the defect. See "Half self-test functional check" on page 310 and "Drum rotation functional check" on page 310. If a correct toner image is present on the drum's surface, assume that the first four functions of the electrophotographic process are functioning, and troubleshoot the failure as a transfer or fusing problem. If the image on the paper looks good before it enters the fuser, then the problem exists in the fuser.

Download Free Service Manual at http://printer1.blogspot.com

Check the print cartridge

Image-formation defects are often the result of problems with the print cartridge. If you suspect that the print cartridge is the source of the problem, replace the print cartridge before troubleshooting image defects.

Use the following list to make sure that the print cartridge is still operable.

- Check the print cartridge to see if it has been disassembled or refilled.
- Inspect the cartridge for toner leaking through worn seals. (If the drum has been manually rotated, it might have caused internal damage and toner spills can result.)

Note Print cartridges are rated for 12,000 (LaserJet 4200) and 18,000 (LaserJet 4300) images at five percent coverage. It is possible to wear out the gears and the cartridge seals before TONER LOW appears on the control panel if average toner coverage is less than five percent. See "EconoMode" on page 309.

- Check the surface of the photosensitive drum in the cartridge to see if it has been damaged or scratched. Touching the drum contaminates the photosensitive surface and can cause spotting and defects during printing.
- Dark areas on the page might indicate that the drum has been exposed to light for too long. If dark areas appear, stop the printer and wait a few minutes This should eliminate most defective images. If not, placing the print cartridge in a dark environment for several days can restore some life to the drum.

EconoMode

EconoMode creates draft-quality printing by reducing the amount of toner on the printed page by up to 50%. Advise the customer to turn EconoMode on or off from the printer driver or software application, because those settings override the control panel settings. EconoMode settings can also be changed from the print-quality menu on the control panel.

CAUTION Hewlett-Packard does not recommend full-time use of EconoMode. If EconoMode is always used, it is likely that the toner supply will outlast the mechanical parts in the print cartridge.

Download Free Service Manual at http://printer1.blogspot.com

Half self-test functional check

The electrophotographic process can be subdivided into the following stages:

- Cleaning (removes excess toner from the drum surface)
- Conditioning (places a uniform electrical charge on the drum)
- Writing (the laser strikes the surface of the drum to create an electrostatic image)
- Developing (forms the toner image on the drum)
- Transferring (charges transfer the image to the print media)
- Fusing (heat and pressure produces a permanent image)

The purpose of the half self-test check is to determine which process is malfunctioning. Perform the test as follows:

1. Print a configuration page from the control panel `INFORMATION MENU`.
2. Open the top cover after the paper advances half-way through the printer (about three to five seconds after the main motor begins rotation). The leading edge of the paper should have advanced past the print cartridge.
3. Remove the print cartridge.
4. Open the print cartridge's drum shield to view the drum's surface.

If a dark and distinct toner image is present on the drum's surface, assume that the first four functions of the electrophotographic process are functioning (cleaning, conditioning, writing, and developing), and troubleshoot the failure as a transfer or fusing problem.

If no image is present on the photosensitive drum, perform the following check.

Drum rotation functional check

The photosensitive drum, located in the print cartridge, must rotate for the print process to work. The photosensitive drum receives its drive from the main gear assembly. To determine whether the drum is rotating:

1. Open the top cover.
2. Remove the print cartridge.
3. Mark the cartridge's drive gear with a felt-tipped marker. Note the position of the mark.
4. Install the print cartridge and close the top cover. The start-up sequence should rotate the drum enough to move the mark.
5. Open the printer and inspect the gear that was marked in step 3. Verify that the mark moved. If the mark did not move, inspect the main gear assembly to make sure that it meshes with the print cartridge gears. If the drive gears function, and the drum does not move, replace the print cartridge.

Note This test is especially important if refilled print cartridges are in use.

Download Free Service Manual at http://printer1.blogspot.com

Image defect tables

Table 54. Print quality image defects

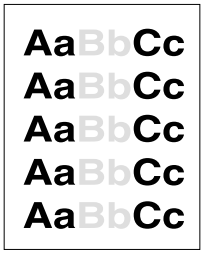 See “Light print (partial page)” on page 313	See “Light print (entire page)” on page 313	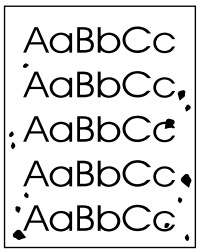 See “Specks or dots” on page 314	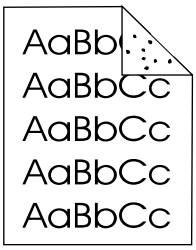 See “Specks or dots” on page 314	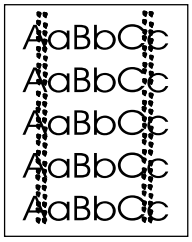 See “Specks or dots” on page 314
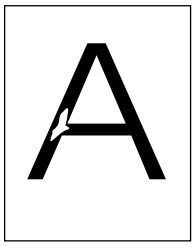 See “Drop outs and character voids” on page 315	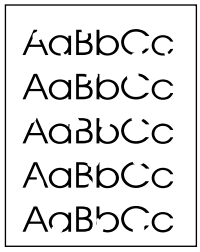 See “Drop outs and character voids” on page 315	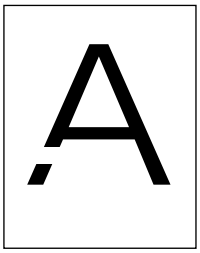 See “Drop outs and character voids” on page 315	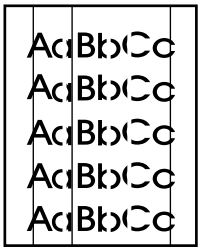 See “Lines” on page 316	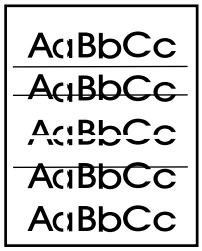 See “Lines” on page 316
See “Grey background” on page 317	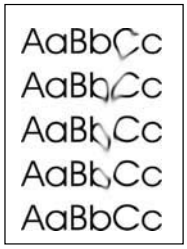 See “Loose toner or toner smear” on page 317	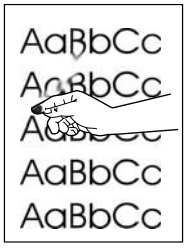 See “Loose toner or toner smear” on page 317	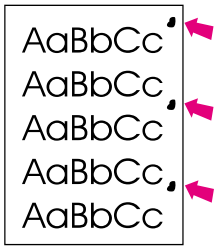 See “Repeating defects and repeating images” on page 318	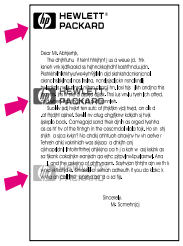 See “Repeating defects and repeating images” on page 318
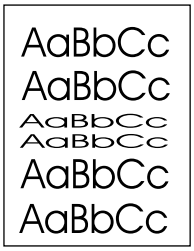 See “Distorted images” on page 318	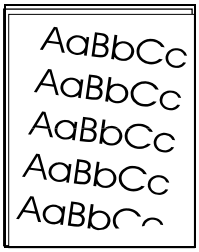 See “Skew” on page 319	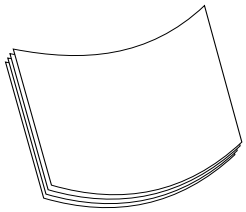 See “Curl or wave” on page 319	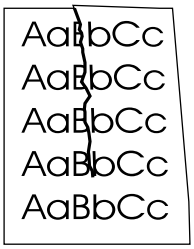 See “Creases” on page 319	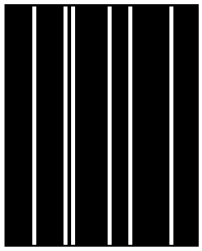 See “White lines” on page 320
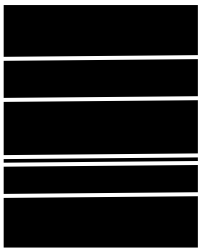 See “White lines” on page 320	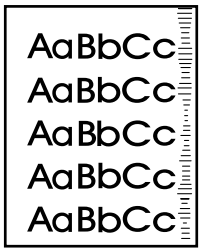 See “Smudged lines (either direction)” on page 320	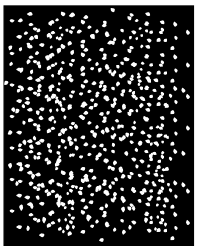 See “White spots on black” on page 321	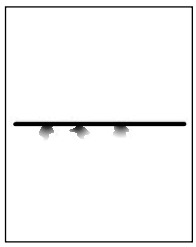 See “Scattered lines” on page 321.	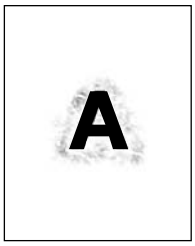 See “Blurred print” on page 321.

Download Free Service Manual at http://printer1.blogspot.com

Table 54. Print quality image defects (continued)

See “Black page” on page 322.	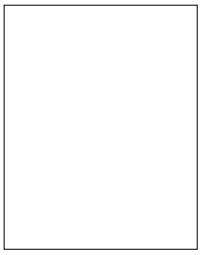 See “Blank (or white) page” on page 323.	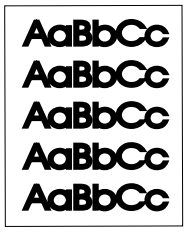 See “Dark print” on page 324.		

Download Free Service Manual at http://printer1.blogspot.com

Table 55. Light print (partial page)

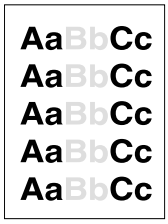

Possible cause	Recommended action(s)
The print cartridge is not installed correctly.	• Remove and then reinstall the print cartridge. The top cover should completely close when the cartridge is fully seated.
Toner supply is low or toner cartridge developer is defective.	**1.** Shake the print cartridge gently to redistribute the toner. **2.** Replace the cartridge.
Transfer roller is worn or contaminated or maintenance might be due.	• Print a supplies status page (see"Supplies status page" on page 242) and look at the maintenance kit gauge. If maintenance is due, install a maintenance kit. For information about ordering a maintenance kit, see chapter 8.

Table 56. Light print (entire page)

Possible cause	Recommended action
Begin by performing the half self-test functional check (see "Half self-test functional check" on page 310). If the image on the print drum is light, proceed with actions 1, 2, 3, 6, and 7. If the drum image is normal, proceed with actions 5, 6, and 8.	
Toner supply is low.	**Action 1** • Shake the print cartridge gently to redistribute the toner, or replace the cartridge.
EconoMode is on. EconoMode saves toner by reducing the dot density. The effect might appear to be a print-quality problem in some cases.	**Action 2** • Turn EconoMode off.
Print density is set incorrectly	**Action 3** • Change the toner density (see"Print Quality submenu" on page 46) to a darker setting and try the print job again.
The media does not meet specifications. The moisture content, conductivity, or surface finish might not work correctly with the electrophotographic process.	**Action 4** • Try a different paper lot.
The transfer roller is defective or not installed correctly. If the transfer roller loses conductivity, it cannot effectively pull toner from the drum.	**Action 5** • Verify the transfer roller is installed correctly. If the transfer roller is damaged, replace it. See "Transfer roller" on page 138.
The high-voltage connector springs are dirty or damaged.	**Action 6** • The high-voltage connectors protrude into the print cartridge cavity. Clean the springs if they are dirty. Replace the springs if they are damaged or missing.
The laser/scanner shutter door is not opening correctly.	**Action 7** **1.** Remove and reseat the print cartridge. **2.** Verify that the laser/scanner shutter door can open properly. If necessary, replace the laser/scanner assembly. See "Laser/scanner assembly" on page 173.
The power supply is defective. The power supply contains the high-voltage circuit.	**Action 8** • Replace the power supply. See "Power supply" on page 188

Download Free Service Manual at http://printer1.blogspot.com

Table 57. Specks or dots

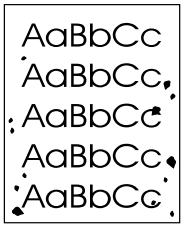

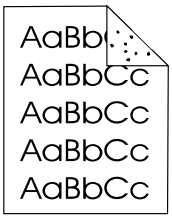

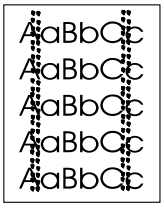

Possible cause	Recommended action
Specks	
Specks might appear on a page after a jam has been cleared. Print two to three more pages and see if they disappear.	
There is dirt in the printer.	**1.** Print a few more pages and see if the problem corrects itself. **2.** Clean the inside of the printer (see chapter 4) **3.** Process a printer cleaning page. See "Running the cleaning page manually" on page 56.
The print cartridge has damaged components.	• Perform the half self-test functional check (see "Half self-test functional check" on page 310). If the problem developed on the print drum, replace the print cartridge.
The media does not meet specifications or is not stored properly.	**1.** Turn over the stack of media in the tray. Also try rotating the media 180 degrees. **2.** Check the media for type and quality. Replace the media, and advise the customer to use the HP recommended media and to store it correctly. See "Paper specifications" on page 9.
The fuser rollers are worn out.	• Replace the fuser. See "Fuser" on page 162
Dots (in the paper path direction)	
The static eliminator teeth are dirty.	• Clean the static eliminator teeth with a small brush or compressed air.
Poor contact between the static eliminator teeth and the power supply.	• Clean the contacts, if they are dirty. If the problem persists after cleaning, or the contacts are damaged or deformed, replace them.
The transfer roller is deformed or deteriorated.	• Replace the transfer roller. See "Transfer roller" on page 138.
The power supply is defective.	• Replace the power supply. See "Power supply" on page 188.

Download Free Service Manual at http://printer1.blogspot.com

Table 58. Drop outs and character voids

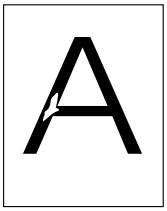

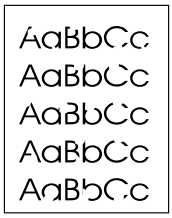

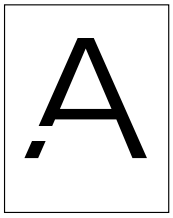

Possible cause	Recommended action(s)
Printing on the wrong side of the paper. The label on the ream of paper indicates which side to print on. The different surface properties of some papers might cause problems if the paper is loaded wrong-side-up.	**1.** Check the arrow on the paper wrapper. Make sure that the paper loaded corresponds with the arrow pointing up in tray 1, or pointing down in the other trays. **2.** Turn over the stack of paper in the tray. Also try rotating the stack 180 degrees. *Do not* fan the stack. **3.** Check the paper (or other media) type and quality. Replace the media and advise the customer to use the recommended HP media and to store it correctly.
The media surface is too rough.	• Use paper with the correct finish (smoothness) to meet HP specifications (see the *HP LaserJet Printer Family Paper Specification Guide*).
The media surface is too smooth for proper toner adhesion.	• Use paper with the correct finish (smoothness) to meet HP specifications (see the *HP LaserJet Printer Family Paper Specification Guide*).
Bad transparencies. Transparencies can have this problem because they are not designed for proper toner adhesion.	• Use hp-approved transparencies for monochrome LaserJet printers (see the *HP LaserJet Printer Family Paper Specification Guide*).
The printers operating environment does not meet specifications.	• Make sure the printer is installed in the proper environment. See "Environmental specifications" on page 7.
The fuser roller is dirty and is lifting part of the image off of the paper.	• Process a cleaning page (see chapter 4). several pages might be required if the fuser is very dirty.
Defective or nearly empty print cartridge.	• Replace the print cartridge.
Wrong toner density setting.	• Access the print-quality menu at the control panel, and adjust the toner density setting. See "Print Quality submenu" on page 46. Make sure EconoMode is set to off.
Wrong fuser setting for media type.	• Access the configure device menu at the control panel, and change the fuser mode setting or choose another media type. See "Configure Device menu" on page 44.
Bad transfer roller. If the transfer roller has finger oils on its surface, is dirty or worn out, this problem can occur.	• Clean the transfer roller using a dry, lint-free cloth. Do not touch the transfer roller with your fingers. If the problem persists, replace the transfer roller. See "Transfer roller" on page 138.
Poor high-voltage contact between the power supply and the print cartridge or transfer roller.	• Inspect the contacts and clean them if they are dirty. Replace them if they are damaged.
The power supply is defective (low transfer voltage).	• Replace the power supply. See "Power supply" on page 188.

Download Free Service Manual at http://printer1.blogspot.com

Table 59. Lines

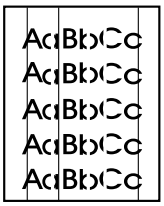

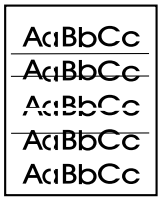

Possible cause	Recommended action(s)
Vertical lines (in the paper path direction)	
The print cartridge is not seated correctly.	• Remove the print cartridge and the reinstall it. The top cover should be able to completely close when the print cartridge is fully seated.
Defective print cartridge.	• Perform the half self-test functional check. See "Half self-test functional check" on page 310. If the defect developed on the drum, replace the print cartridge.
Worn or dirty fuser roller.	• Process a printer cleaning page. See "Running the cleaning page manually" on page 56. Several pages might be required if the fuser is very dirty. If the problem persists, replace the fuser. See "Fuser" on page 162.
Static eliminator teeth (just beyond the transfer roller) are contaminated or defective.	• Clean the teeth with a small brush or compressed air. Replace the assembly if it is damaged.
Light is leaking into the printer.	• Make sure that all of the covers are in place. Move the printer away from outside facing windows.
Horizontal lines (opposite the paper path direction)	
Repetitive defect. If the lines are repeated at a consistent interval down the page, this is a repetitive defect.	• Use the repetitive defect ruler to determine the cause of this defect. See "Repetitive defects troubleshooting" on page 325.
Sharp random lines indicate a problem with the laser/scanner control circuitry.	• Replace the following in order: **1.** Laser/scanner assembly. See "Laser/scanner assembly" on page 173. **2.** DC controller PCA. See "DC controller PCA" on page 181. **3.** Cables between the DC controller and the laser/scanner assembly. **4.** Formatter assembly. See "Formatter assembly" on page 161.

Download Free Service Manual at http://printer1.blogspot.com

Table 60. Grey background

Possible cause	Recommended action(s)
The media does not meet specifications or is not stored properly.	**1.** Turn over the stack of media in the tray. Also try rotating the media 180 degrees. **2.** Check the media for type and quality. Replace the media, and advise the customer to use the HP recommended media and to store it correctly. See "Paper specifications" on page 9.
Inside of the printer is dirty (toner leaked out of the print cartridge).	• Clean the inside of the printer (see chapter 4). Install a new print cartridge.
The printers operating environment does not meet specifications.	• Make sure the printer is installed in the proper environment. See "Environmental specifications" on page 7.
Printing on envelope seams. Printing on an envelope seam can cause a background scatter problem.	• Move the text to an area that has no seams.
Wrong toner density setting.	• Access the print-quality menu at the control panel, and adjust the toner density setting. See "Print Quality submenu" on page 46. Make sure EconoMode is set to off.
The high transfer setting is turned off.	• Access the print-quality menu at the control panel (see "Print Quality submenu" on page 46). Select `OPTIMIZE` and set `HIGH TRANSFER=ON`.
The print cartridge is defective.	• Replace the print cartridge.
The high-voltage connector springs are dirty or damaged.	• The high-voltage connectors protrude into the print cartridge cavity. Clean the springs if they are dirty. Replace the springs if they are damaged or missing.
The power supply is defective.	• Replace the power supply. See "Power supply" on page 188

Table 61. Loose toner or toner smear

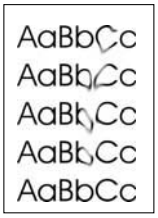

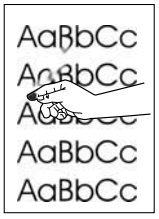

Possible cause	Recommended action(s)
There is dirt in the printer.	**1.** Print a few more pages and see if the problem corrects itself. **2.** Clean the inside of the printer (see chapter 4) **3.** Process a printer cleaning page. See "Running the cleaning page manually" on page 56.
The fuser roller is dirty.	• Process a cleaning page (see "To run the cleaning page manually" on page 56). Several pages might be required if the fuser is very dirty.
The media surface is too rough or too smooth.	• Use paper with the correct finish (smoothness) to meet HP specifications (see the *HP LaserJet Printer Family Paper Specification Guide*).
Static eliminator teeth (just beyond the transfer roller) are contaminated or not grounded, which allows a static charge to remain on the page.	• Clean the teeth with a small brush or compressed air. Replace the assembly if it is damaged.
Fuser is defective. The print will smear if the fuser dose nor heat sufficiently to bond the toner to the paper.	• Replace the fuser. See "Fuser" on page 162.
The DC controller PCA is defective. The DC controller PCA regulates the fuser roller temperature.	• Replace the DC controller PCA. See"DC controller PCA" on page 181.

Download Free Service Manual at http://printer1.blogspot.com

Table 62. Repeating defects and repeating images

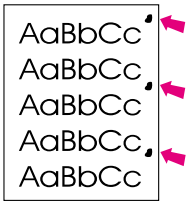

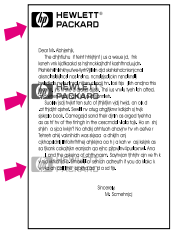

Possible cause	Recommended action(s)
The print cartridge or fuser is damaged. The circumference of the photoconductive drum inside of the print cartridge is 94.2 mm (3.7 inches). If the defect repeats at this interval, the defect is associated with the drum. Repetitive defects caused by the LJ 4300 fuser roller repeat at 94.0 mm (about 3.7 inches) Because the LJ 4300 fuser roller is just 2 mm (.07 inch) smaller than the photoconductive drum it can be difficult to distinguish defects caused by the photoconductive drum from those caused by the LJ 4300 fuser roller.	**1.** Inspect the drum for scratches or other damage. Replace the print cartridge for defects that repeat at 37.7 mm (1.5 inches), 62.8 mm (2.5 inches), 54.0 mm (2.1 inches), and/or 94.2 mm (3.7 inches). **2.** Process a printer cleaning page. See "Running the cleaning page manually" on page 56. **3.** If the problem persists, and the defect repeats at the 75.0 mm (2.95 inches) or 94.0 mm (about 3.7 inches) replace the fuser (see "Fuser" on page 162). For more information about repetitive defects, see "Repetitive defects troubleshooting" on page 325.
Dirty rollers. A dirty roller in the paper path can cause a repetitive defect.	• Examine and clean (or replace) the rollers in the paper path.
Media does not meet specifications. The surface might be too coarse, which can cause repeating marks.	• Try a different paper.
Pre-printed form paper is used.	• Some pre-printed forms (for example, letterheads) use an ink that cannot stand up to the high temperatures in the fuser. Check the media for type and quality. Replace the media, and advise the customer to use the HP recommended media and to store it correctly. See "Paper specifications" on page 9.

For more information about troubleshooting repeating defects, see "Repetitive defects troubleshooting" on page 325.

Table 63. Distorted images

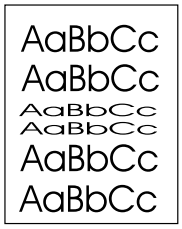

Possible cause	Recommended action(s)
The media does not meet specifications or is not stored properly.	**1.** Turn over the stack of media in the tray. Also try rotating the media 180 degrees. **2.** Check the media for type and quality. Replace the media, and advise the customer to use the HP recommended media and to store it correctly. See "Paper specifications" on page 9.
The printers operating environment does not meet specifications.	• Make sure the printer is installed in the proper environment. See "Environmental specifications" on page 7.
Poor connection of the cables to the laser/scanner assembly.	• Reseat the cables that are connected to the laser/scanner assembly.
Poor connection of the cables to the DC controller PCA.	• Reseat the cables that are connected to the DC controller PCA.
The laser/scanner assembly is defective.	• Replace the laser/scanner. See "Laser/scanner assembly" on page 173.
Gears are worn, causing slippage or jumping.	• Inspect the gears that drive the print cartridge and fuser. Replace the main drive assembly. See "Main drive assembly" on page 186.
The print cartridge motor is defective. HP LaserJet 4300 only	• Replace the print cartridge motor (HP LaserJet 4300 only). See "Print-cartridge motor (HP LaserJet 4300 series printer only)" on page 175.
The DC controller PCA is defective.	• Replace the DC controller PCA. See "DC controller PCA" on page 181.

Download Free Service Manual at http://printer1.blogspot.com

Table 64. Skew

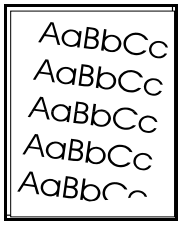

Possible cause	Recommended action(s)
The media does not meet specifications or is not stored properly.	**1.** Turn over the stack of media in the tray. Also try rotating the media 180 degrees. **2.** Check the media for type and quality. Replace the media, and advise the customer to use the HP recommended media and to store it correctly. See "Paper specifications" on page 9.
The media is not loaded properly or the trays are not adjusted correctly.	• Make sure that the media is loaded properly and that the guides fit correctly against the stack.
The registration assembly is not installed correctly or is damaged.	• Make sure that the registration assembly is installed correctly. If necessary, replace the registration assembly. See "Registration assembly" on page 198.

Table 65. Curl or wave

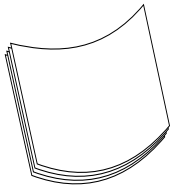

Possible cause	Recommended action(s)
The media does not meet specifications or is not stored properly.	**1.** Turn over the stack of media in the tray. Also try rotating the media 180 degrees. **2.** Check the media for type and quality. Replace the media, and advise the customer to use the HP recommended media and to store it correctly. See "Paper specifications" on page 9.
The printer's operating environment does not meet specifications.	• Make sure the printer is installed in the proper environment. See "Environmental specifications" on page 7.
Wrong output bin.	• Print to a different output bin (top or rear output bin).
Wrong fuser setting for the media type.	• Access the configure device menu at the control panel, and change the fuser mode setting or choose another media type. See "Configure Device menu" on page 44.

Table 66. Creases

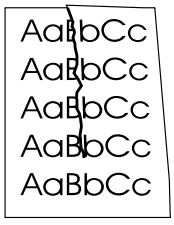

Possible cause	Recommended action(s)
The media does not meet specifications or is not stored properly.	**1.** Turn over the stack of media in the tray. Also try rotating the media 180 degrees. **2.** Check the media for type and quality. Replace the media, and advise the customer to use the HP recommended media and to store it correctly. See "Paper specifications" on page 9.
The printer's operating environment does not meet specifications.	• Make sure the printer is installed in the proper environment. See "Environmental specifications" on page 7.
The media is not loaded properly or the trays are not adjusted correctly.	• Make sure that the media is loaded properly and that the guides fit correctly against the stack.
Wrong tray.	• Print from tray 1 when you use a difficult media.
Wrong output bin.	• Print to the rear output bin.
Obstruction in the paper path.	**1.** Check the paper path for debris. **2.** Check for damaged components that might be creasing the paper.

Download Free Service Manual at http://printer1.blogspot.com

Table 67. White lines

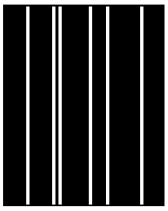

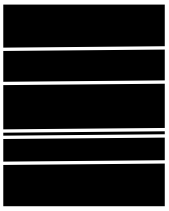

Possible cause	Recommended action(s)
White lines in the paper path	
Toner supply is low or the print cartridge is defective.	**1.** Shake the print cartridge gently to redistribute the toner. **2.** Replace the cartridge.
Dirt in the laser path.	● Clean the laser path. Remove the laser/scanner assembly (see "Laser/scanner assembly" on page 173) and check for dirt or other obstructions in the beam path.
The fuser is defective.	● Replace the fuser. See "Fuser" on page 162.
Dirty mirror in the laser/scanner.	● Replace the laser/scanner assembly. See "Laser/scanner assembly" on page 173
White lines opposite the paper path	
The print drum is damaged.	● Replace the print cartridge.
The fuser roller is damaged.	● Process a printer cleaning page. See "Running the cleaning page manually" on page 56. ● If the problem persists, replace the fuser. See"Fuser" on page 162.
Unstable laser beam or beam circuitry.	● Replace the following in order: **1.** Laser/scanner assembly. See "Laser/scanner assembly" on page 173. **2.** DC controller PCA. See "DC controller PCA" on page 181. **3.** Cables between the DC controller PCA and the laser/scanner assembly. **4.** Formatter assembly. See "Formatter assembly" on page 161.

Table 68. Smudged lines (either direction)

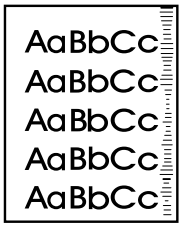

Possible cause	Recommended action(s)
Paper path contamination or damage.	**1.** Perform the half self-test functional check. See "Half self-test functional check" on page 310. If the defect developed on the drum, replace the print cartridge. **2.** Process a printer cleaning page. See "Running the cleaning page manually" on page 56. If the problem persists, replace the fuser. See "Fuser" on page 162. **3.** Check the tray 1 feed roller and the other tray's rollers for contamination. Clean or replace as necessary. **4.** Check for other sources of contamination or damage in the paper path and clean or replace as necessary.
The print cartridge has passed its life expectancy.	● The print cartridge has an expected life of 12,000 pages for the HP LaserJet 4200 printer and 18,000 pages for the HP LaserJet 4300 printer. Replace the print cartridge.
This type of defect might also be a repetitive defect, See "Repetitive defects troubleshooting" on page 325.	

Download Free Service Manual at http://printer1.blogspot.com

Table 69. White spots on black

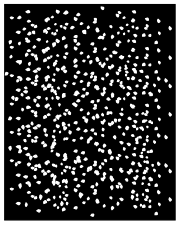

Possible cause	Recommended action(s)
The media does not meet specifications or is not stored properly.	**1.** Turn over the stack of media in the tray. Also try rotating the media 180 degrees. **2.** Check the media for type and quality. Replace the media, and advise the customer to use the HP recommended media and to store it correctly. See "Paper specifications" on page 9
The printers operating environment does not meet specifications.	• Make sure the printer is installed in the proper environment. See "Environmental specifications" on page 7.
The print cartridge is defective.	• Replace the print cartridge.

Table 70. Scattered lines

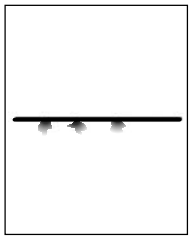

Possible cause	Recommended action(s)
The media does not meet specifications or is not stored properly.	**1.** Turn over the stack of media in the tray. Also try rotating the media 180 degrees. **2.** Check the media for type and quality. Replace the media, and advise the customer to use the HP recommended media and to store it correctly. See "Paper specifications" on page 9
The printers operating environment does not meet specifications.	• Make sure the printer is installed in the proper environment. See "Environmental specifications" on page 7.
Wrong toner density setting.	• Access the print-quality menu at the control panel, and adjust the toner density setting. See "Print Quality submenu" on page 46.
The high transfer setting is turned off.	• Access the print-quality menu at the control panel (see "Print Quality submenu" on page 46). Select `OPTIMIZE` and set `HIGH TRANSFER=ON`.
The line detail setting is turned off.	• Access the print-quality menu at the control panel (see "Print Quality submenu" on page 46). Select `OPTIMIZE` and set `LINE DETAIL=ON`.

Table 71. Blurred print

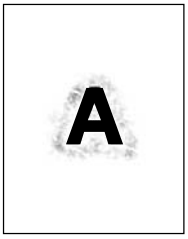

Possible cause	Recommended action(s)
The media does not meet specifications or is not stored properly.	**1.** Turn over the stack of media in the tray. Also try rotating the media 180 degrees. **2.** Check the media for type and quality. Replace the media, and advise the customer to use the HP recommended media and to store it correctly. See "Paper specifications" on page 9
The printers operating environment does not meet specifications.	• Make sure the printer is installed in the proper environment. See "Environmental specifications" on page 7.
Wrong toner density setting.	• Access the print-quality menu at the control panel, and adjust the toner density setting. See "Print Quality submenu" on page 46.
The high transfer setting is turned off.	• Access the print-quality menu at the control panel (see "Print Quality submenu" on page 46). Select `OPTIMIZE` and set `HIGH TRANSFER=ON`.
The line detail setting is turned off.	• Access the print-quality menu at the control panel (see "Print Quality submenu" on page 46). Select `OPTIMIZE` and set `LINE DETAIL=ON`.

Download Free Service Manual at http://printer1.blogspot.com

Table 72. Black page

Possible cause	Recommended action(s)
The print cartridge is defective.	• Replace the print cartridge.
The high-voltage connector springs are dirty or damaged.	• The high-voltage connectors protrude into the print cartridge cavity. Clean the springs if they are dirty. Replace the springs if they are damaged or missing.
The laser beam drive circuit or high-voltage circuit is defective (it is not supplying the correct voltage).	**1.** Check the cables between the DC controller PCA and the high-voltage circuitry (part of the power supply). **2.** Replace the power supply. See "Power supply" on page 188. **3.** Replace the DC controller PCA. See "DC controller PCA" on page 181.
The laser/scanner assembly is defective (it is turning the laser beam on continuously).	• Replace the laser/scanner assembly. See "Laser/scanner assembly" on page 173.
Connectors between the laser/scanner assembly and the DC controller PCA are not seated correctly or are defective.	• Inspect and reseat the connectors. If necessary, replace the cables.

Download Free Service Manual at http://printer1.blogspot.com

Table 73. Blank (or white) page

Possible cause	Recommended action(s)
Software configuration (intermittent problem).	• Make sure that the application is not sending incorrect page-length requests or extra page-eject commands.
Network configuration. Some sharing devices on networks might generate a blank page as a print job separator.	• Check with the network administrator.
Multiple feeds. The printer might be feeding two or more pages at once (intermittent problem).	• Remove the media from the tray and flex the stack in one direction and then the other to separate the pages. *Do not* fan the stack. Replace the stack in the tray.
The sealing tape was left in the print cartridge.	• Remove the sealing tape.
The print cartridge is empty or defective.	• Replace the print cartridge.
The laser/scanner shutter door is not opening correctly.	**1.** Remove and reseat the print cartridge. **2.** Verify that the laser/scanner shutter door can open properly. If necessary, replace the laser/scanner assembly. See "Laser/scanner assembly" on page 173.
No transfer-roller voltage.	• Without transfer-roller voltage, toner does not transfer correctly from the surface of the drum to the paper. Perform the half self-test functional check (see "Half self-test functional check" on page 310) to check the electrophotographic process. If necessary, replace the transfer roller. See "Transfer roller" on page 138.
The high-voltage connector springs are dirty or damaged.	• The high-voltage connectors protrude into the print cartridge cavity. Clean the springs if they are dirty. Replace the springs if they are damaged or missing.
No drum ground path.	• With no drum ground path, the drum cannot discharge. The negative charge on the drum repels toner, and leaves a nearly-white page (possibly with bubbled print). Check the drum ground that runs from the contact point in the center of the print drum.
High-voltage circuit is defective.	• Replace the power supply. See "Power supply" on page 188.
Defective laser/scanner cable.	• Low-level signals that are exchanged between the laser/scanner assembly and the DC controller PCA might be affecting the laser output. Replace the laser/scanner cables.

Download Free Service Manual at http://printer1.blogspot.com

Table 74. Dark print

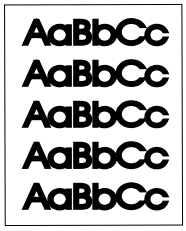

Possible cause	Recommended action(s)
Wrong toner density setting.	● Access the print-quality menu at the control panel, and adjust the toner density setting. See "Print Quality submenu" on page 46.
The print cartridge drum is close to the end of its expected life.	● Replace the print cartridge.
The media does not meet specifications or is not stored properly.	**1.** Turn over the stack of media in the tray. Also try rotating the media 180 degrees. **2.** Check the media for type and quality. Replace the media, and advise the customer to use the HP recommended media and to store it correctly. See "Paper specifications" on page 9
Poor high-voltage contact to the power supply.	● Clean the contacts if they are dirty. If the problem persists after cleaning, or the contacts are damaged or deformed, replace them.
Defective laser/scanner assembly.	● Replace the laser/scanner assembly. See "Laser/scanner assembly" on page 173.
Defective high-voltage circuit.	● Replace the power supply. See "Power supply" on page 188

Download Free Service Manual at http://printer1.blogspot.com

Repetitive defects troubleshooting

Defects on printer rollers can cause image defects to appear at regular intervals on the page. These defects appear at regular intervals that correspond to the circumference of the roller causing the defect. Measure the distance between defects that recur on a page. Use table 75 or the repetitive defect ruler (figure 207) to determine which roller is causing the defect. To resolve the problem, try cleaning the roller first. If the roller is still dirty after cleaning or if it is damaged, replace the indicated part.

CAUTION Do not use solvents or oils to clean rollers. Instead, rub the roller with lint-free paper. If dirt is difficult to remove, rub the roller with lint-free paper dampened with water.

Table 75. Repetitive defects

Roller	Distance between defects	Replacement part
Primary charging roller	37.7 mm (1.5 inches)	print cartridge
Developer roller*	62.8 mm (2.5 inches)	print cartridge
Fuser	75.0 mm (2.95 inches; HP LaserJet 4200) 94.0 mm (3.75 inches; HP LaserJet 4300)	Fuser
Photosensitive drum	94.2 mm (3.75 inches)	print cartridge
*The developer roller circumference is 62.8 mm (2.5 inches). This defect will most likely repeat at intervals of 54.0 mm (2.125 inches) because of the way it is geared.		

Note Defects on the tray pickup rollers or the tray 1 pickup roller do not cause a repetitive defect. Defects on these rollers cause a defect to appear only on the leading edge of the image.

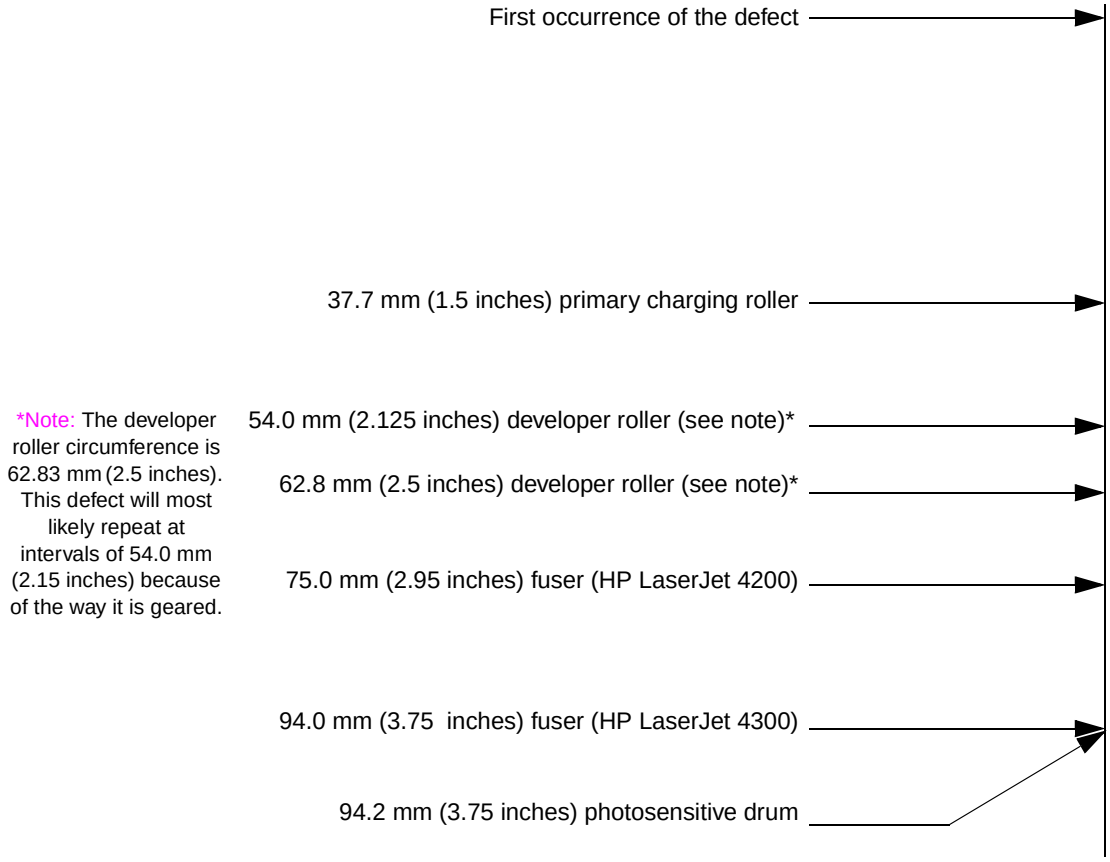

Figure 207. **Repetitive defect ruler**

Download Free Service Manual at http://printer1.blogspot.com

Troubleshooting the stacker and the stapler/stacker

Overview

When troubleshooting the stacker or stapler/stacker it might be difficult to distinguish whether the malfunction relates to the stacker, stapler/stacker or to the printer. The troubleshooting procedures in this section assume the stacker or stapler/stacker is installed on a printer that is working normally. Always correct any printer errors *before* attempting to troubleshoot the stacker or stapler/stacker. Stacker and stapler/stacker errors fall into four groups:

- Jam errors
- Paper transport errors
- Malfunction errors
- Component errors

Jam and transport errors result in media not successfully moving from the printer through the stacker or stapler/stacker. Malfunction errors result in the non- or mis-operation of the stacker or stapler/stacker. Component errors are the result of an internal component failure. Component errors messages will appear on the control-panel display. For more information about control panel messages, see “Alphabetical printer messages” on page 258 and “Numerical printer messages” on page 274.

Initial checks

❑ Inspect the stacker or stapler/stacker connector on the unit and on the printer. Verify that these connectors are not damaged, and that the stacker or stapler/stacker is installed correctly and fully seated. If the stacker or stapler/stacker is installed with the printer power on, you must turn the power off and then back on again for the stacker or stapler/stacker to operate.

❑ Verify that the environmental specifications are met. These specifications are the same for the stacker and stapler/stacker as for the printer. See “Environmental specifications” on page 7.

❑ Verify that the media being used meets HP recommendation. See “Supported sizes and weights of media” on page 10 and “Supported types of media” on page 14.

❑ Verify that any printer errors are corrected before troubleshooting the stacker or stapler/stacker. The printer must be operating normally to troubleshoot the stacker or stapler/stacker. See “Alphabetical printer messages” on page 258 and “Numerical printer messages” on page 274.

❑ If the stacker or stapler/stacker was recently moved from a cold environment (for example, a warehouse) into a warm room, it may develop problems due to condensation. If condensation occurs, either wipe off the parts with a dry, lint-free cloth, or leave the stacker or stapler/stacker turned on for 10 to 20 minutes.

Download Free Service Manual at http://printer1.blogspot.com

Jam errors

Stacker and stapler/stacker paper path

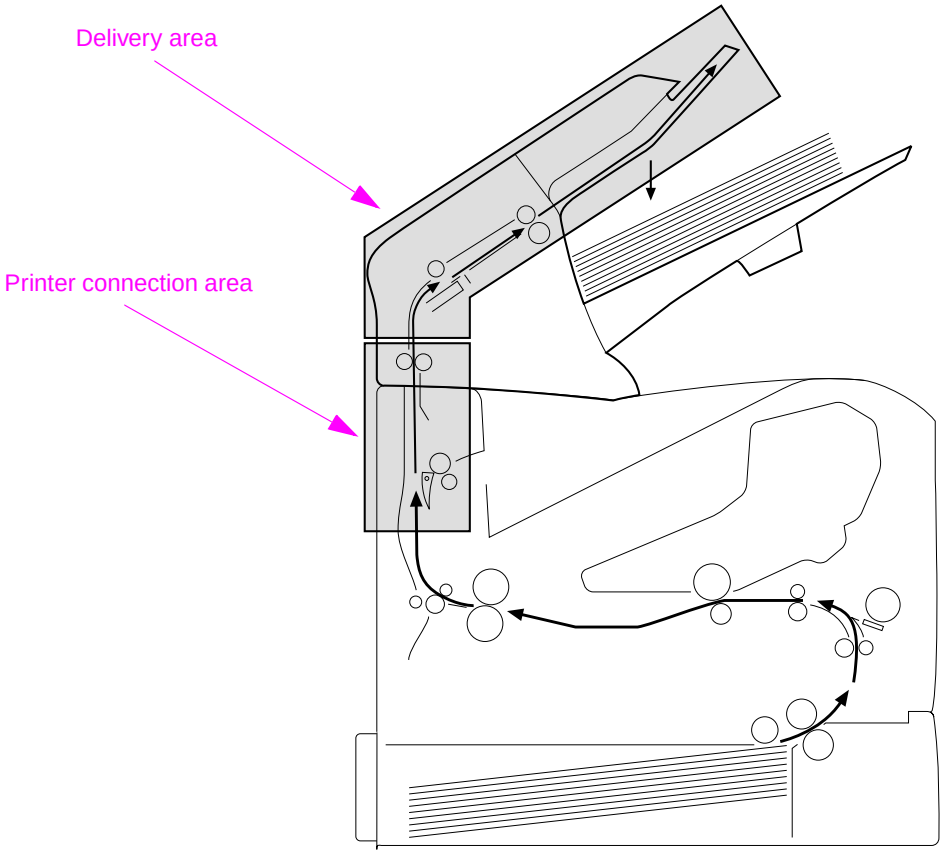

Figure 208. **Stacker and stapler/stacker paper path**

Stacker paper path test

1. Press the SELECT ( ) button to open the menus
2. Use the UP ARROW ( ) button or the DOWN ARROW ( ) button to scroll to DIAGNOSTICS, and then press the SELECT ( ) button.
3. Use the UP ARROW ( ) button or the DOWN ARROW ( ) button to scroll to PAPER PATH TEST, and then press the SELECT ( ) button.
4. Use the UP ARROW ( ) button or the DOWN ARROW ( ) button to scroll to DESTINATION, and then press the SELECT ( ) button. Scroll to OPTIONAL BIN 1 then press the SELECT ( ) button.
5. Use the UP ARROW ( ) button or the DOWN ARROW ( ) button to scroll to COPIES then press the SELECT ( ) button. Scroll to the desired number of test pages, then press the SELECT ( ) button.
6. Use the UP ARROW ( ) button or the DOWN ARROW ( ) button to scroll to PRINT TEST PAGE, and then press the SELECT ( ) button. The printer will print the selected number of pages and send them to the stacker.

Download Free Service Manual at http://printer1.blogspot.com

Stapler/stacker paper path test

1. Press the SELECT ( ) button to open the menus.
2. Use the UP ARROW ( ) button or the DOWN ARROW ( ) button to scroll to CONFIGURE DEVICE, and then press the SELECT ( ) button.
3. Use the UP ARROW ( ) button or the DOWN ARROW ( ) button to scroll to STAPLER STACKER, and then press the SELECT ( ) button.
4. Use the UP ARROW ( ) button or the DOWN ARROW ( ) button to scroll to STAPLES, and then press the SELECT ( ) button. Scroll to ONE, and then press the SELECT ( ) button.
5. Press the Pause/Resume button to exit the submenus.
6. Press the SELECT ( ) button to open the menus.
7. Use the UP ARROW ( ) button or the DOWN ARROW ( ) button to scroll to DIAGNOSTICS, and then press the SELECT ( ) button.
8. Use the UP ARROW ( ) button or the DOWN ARROW ( ) button to scroll to PAPER PATH TEST and then press the SELECT ( ) button.
9. Use the UP ARROW ( ) button or the DOWN ARROW ( ) button to scroll to DESTINATION, and then press the SELECT ( ) button. Scroll to OPTIONAL BIN 1, and then press the SELECT ( ) button.
10. Use the UP ARROW ( ) button or the DOWN ARROW ( ) button to scroll to COPIES, and then press the SELECT ( ) button. Scroll to 10, and then press the SELECT ( ) button.
11. Use the UP ARROW ( ) button or the DOWN ARROW ( ) button to scroll to PRINT TEST PAGE, and then press the SELECT ( ) button. The printer will print 10 test pages and send them to the stapler/stacker where they are stapled.

Table 76. Printer connection area jam troubleshooting

Possible cause	Recommended action(s)
Printer connection area jam *with* the leading edge of the media sticking out of the top of the printer.	
The feed motor is defective.	• Turn the printer off and then on again. Verify that the feed rollers rotate correctly. If the rollers do not rotate, replace the stacker or stapler/stacker.
Worn, dirty, or defective feed rollers.	• Clean the rollers if they are dirty. If necessary, replace the stacker or stapler/stacker.
The inlet sensor (PS1101) arm cannot move freely or is damaged.	• Inspect the inlet sensor (PS1101). See "Location of the stacker and stapler/stacker switches and sensors" on page 345. Verify that the sensor arm can move freely. If necessary, replace the stacker or stapler/stacker.
The inlet sensor (PS1101) spring is defective or damaged.	• Reseat the inlet sensor (PS1101) spring. See "Location of the stacker and stapler/stacker switches and sensors" on page 345. If necessary, replace the stacker or stapler/stacker.
The stacker or stapler/stacker PCA is defective.	• Replace the stacker or stapler/stacker.

Download Free Service Manual at http://printer1.blogspot.com

Table 76. Printer connection area jam troubleshooting (continued)

Possible cause	Recommended action(s)
Printer connection area jam *without* the leading edge of the media sticking out of the top of the printer.	
The deflector cannot move freely or is defective.	• Inspect the deflector. Verify that it can move freely and is not damaged. If necessary, replace the stacker or stapler/stacker.
The deflector solenoid (SL1101) is defective.	• If necessary, replace the deflector mechanism in the printer.
The stacker of stapler/stacker PCA is defective.	• Replace the stacker or stapler/stacker.

Table 77. Delivery area jam troubleshooting

Possible cause	Recommended action(s)
Delivery area jams when the leading edge of the media *has* passed the delivery rollers.	
Deformed staples (stapler/stacker only)	• Replace the stapler unit. See "Maintaining the stapler unit" on page 60.
The paper delivery sensor (PS1102) arm cannot move freely or is damaged.	• Inspect the paper delivery sensor (PS1102). See "Location of the stacker and stapler/stacker switches and sensors" on page 345. Verify that the sensor arm can move freely. If necessary, replace the stacker or stapler/stacker.
The paper delivery sensor (PS1102) spring is defective or damaged.	• Reseat the paper delivery sensor (PS1102) spring. See "Location of the stacker and stapler/stacker switches and sensors" on page 345. If necessary, replace the stacker or stapler/stacker.
The paper delivery sensor (PS1102) is defective.	• Replace the stacker or stapler/stacker.

Download Free Service Manual at http://printer1.blogspot.com

Paper transport errors

Table 78. Paper transport error troubleshooting

Possible cause	Recommended action(s)
Worn, dirty, or defective rollers.	• Inspect all of the stacker or stapler/stacker rollers. Clean any dirty rollers. If necessary, replace the stacker or stapler/stacker.
The feed guide is damaged, causing the leading edge of the media to be bent.	• Inspect the feed guide. If, necessary, replace the stacker or stapler/stacker.
Obstruction in the paper path causes skewed print.	• The paper path is contaminated. Clean the paper path. See "Stacker and stapler/stacker paper path" on page 327. • Worn, dirty or defective rollers.Inspect all of the stacker or stapler/stacker rollers. Clean any dirty rollers. If necessary, replace the stacker or stapler/stacker.

Malfunction errors

Table 79. Malfunction error troubleshooting

Possible cause	Recommended action(s)
No power	
The stacker or stapler/stacker connector is not fully seated or is damaged.	• Inspect the stacker or stapler/stacker connector on the unit and on the printer. Verify that these connectors are not damaged, and that the stacker or stapler/stacker is installed correctly and fully seated. If the stacker or stapler/stacker is installed with the printer power on, you must turn the power off and then back on again for the stacker or stapler/stacker to operate. • Turn the printer power off. Remove and reinstall the stacker or stapler/stacker. Turn the printer power on again.
The stacker or stapler/stacker PCA is defective.	• Replace the stacker or stapler/stacker.
No stapling (stapler/stacker only)	
There are no staples in the staple cartridge.	• Replace the stapler unit staple cartridge. See "Location of the stapler/stacker stapler unit" on page 344.
The stapler unit is defective.	• Replace the stapler unit. See "Location of the stapler/stacker stapler unit" on page 344.
The print job contains more than one paper size.	• When using the stapler/stacker, limit the print job to a single page size.
The stapler/stacker PCA is defective.	• Replace the stapler/stacker.

Download Free Service Manual at http://printer1.blogspot.com

Component errors

Note Component errors will cause a control panel message to appear on the control-panel display. For more information about these messages, see "Alphabetical printer messages" on page 258 and "Numerical printer messages" on page 274.

Table 80. Component error troubleshooting

Possible cause	Recommended action(s)
The jogger mechanism or motor (M1102) is defective (stapler/stacker only).	• Inspect the jogger mechanism. See "Location of the stacker and stapler/stacker motors and solenoids" on page 346. If necessary, replace the stapler/stacker.
The paddle mechanism or motor (M1101) is defective (stapler/stacker only).	• Inspect the paddle mechanism. See "Location of the stacker and stapler/stacker motors and solenoids" on page 346. If necessary, replace the stapler/stacker. • The stapler/stacker PCA is defective. Replace the stapler/stacker.
Stapler mechanism or motor (M1104) is defective (stapler/stacker only).	• The stapler unit has failed. Replace the stapler unit. See "Maintaining the stapler unit" on page 60. • The stapler/stacker PCA is defective. Replace the stapler/stacker.
The `13.12.07 JAM IN THE STAPLER` message appears on the control-panel display but there is no jam in the stapler unit (stapler/stacker only).	• The staples are defective. Replace the staple cartridge. • The stapler unit is defective. Replace the stapler unit. See "Maintaining the stapler unit" on page 60. • The stapler/stacker PCA is defective. Replace the stapler/stacker.
The `STAPLER LOW ON STAPLES` or `STAPLER OUT OF STAPLES` message appears on the control-panel display but there is a staple cartridge in the stapler unit (stapler/stacker only).	• There are no staples in the staple cartridge. Replace the staple cartridge. See "Loading staples" on page 62. • Replace the stapler unit. See "Removing and replacing the stapler unit" on page 60. • The stapler/stacker PCA is defective. Replace the stapler/stacker.
A `13.XX.YY JAM` message appears on the control panel display but there is no visible jam in the stacker or stapler/stacker.	• The inlet sensor (PS1101) lever does not move smoothly or is damaged. See"Location of the stacker and stapler/stacker switches and sensors" on page 345. Inspect the inlet sensor. Verify that the sensor lever can move freely. • The delivery sensor (PS1102) lever does not move smoothly or is damaged. See"Location of the stacker and stapler/stacker switches and sensors" on page 345. Inspect the delivery sensor. Verify that the sensor lever can move freely. • If necessary, replace the stacker or stapler/stacker.
The `OUTPUT PAPER PATH OPEN` message appears on the control-panel display but the jam access and stapler unit doors are closed.	• The door open switch (SW1101) is damaged or defective. See"Location of the stacker and stapler/stacker switches and sensors" on page 345. Replace the stacker or stapler/stacker. • The stapler/stacker PCA is defective. Replace the stacker or stapler/stacker.
The `OPTIONAL BIN 1 FULL` message appears on the control-panel display but the bin 1 is empty.	• The paper full sensor (PS1106) is damaged or defective. See"Location of the stacker and stapler/stacker switches and sensors" on page 345. Replace the stacker or stapler/stacker. • The stapler/stacker PCA is defective. Replace the stacker or stapler/stacker.

Download Free Service Manual at http://printer1.blogspot.com

Printer component locations

Main printer parts

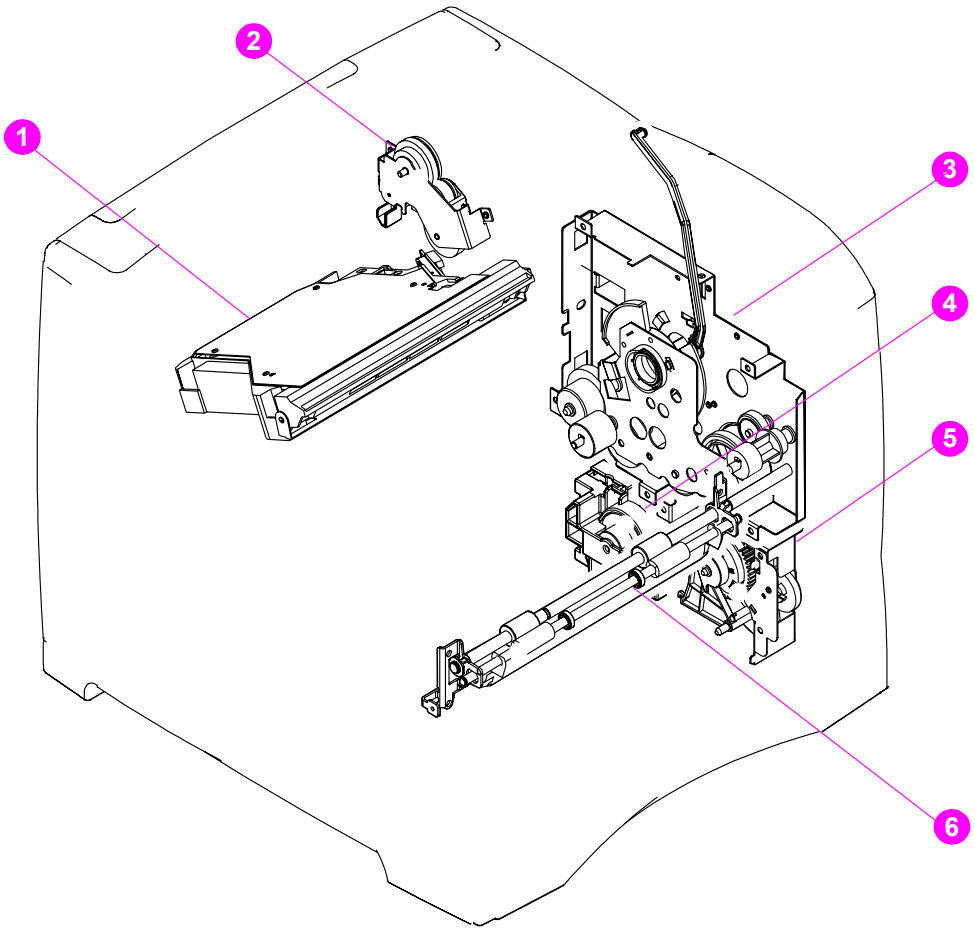

Figure 209. **Location of main printer parts (1 of 4)**

1. Laser/scanner assembly
2. Duplex pendulum assembly
3. Main drive assembly
4. Lifter drive assembly
5. Paper pickup drive assembly
6. Paper feed assembly

Download Free Service Manual at http://printer1.blogspot.com

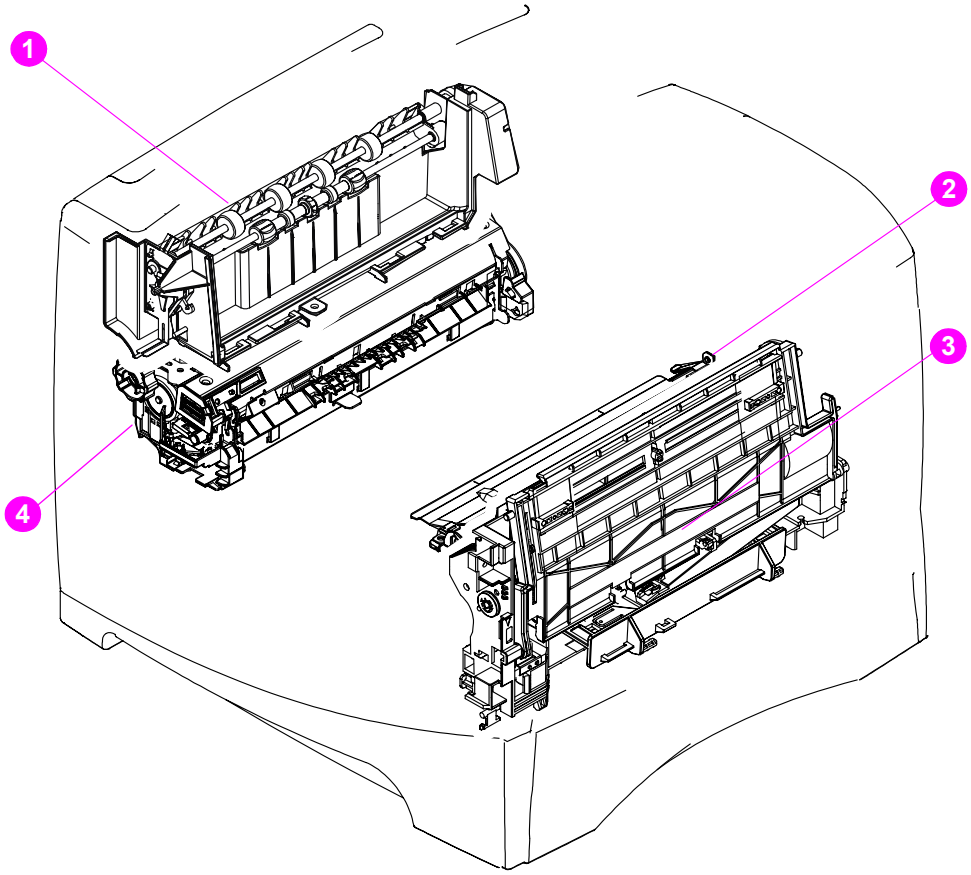

Figure 210. **Location of main printer parts (2 of 4)**

1. Output delivery assembly
2. Registration roller assembly
3. Tray 1 pickup assembly
4. Fuser assembly

Download Free Service Manual at http://printer1.blogspot.com

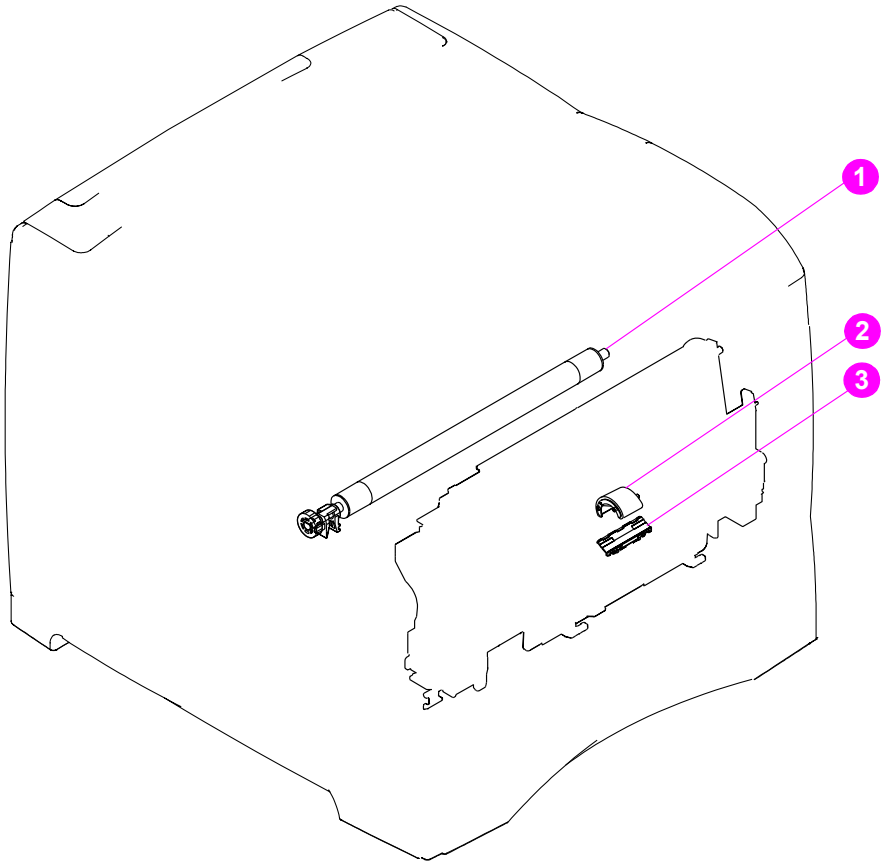

Figure 211. **Location of main printer parts (3 of 4)**

1. Transfer roller
2. Tray 1 pickup roller
3. Separation pad

Download Free Service Manual at http://printer1.blogspot.com

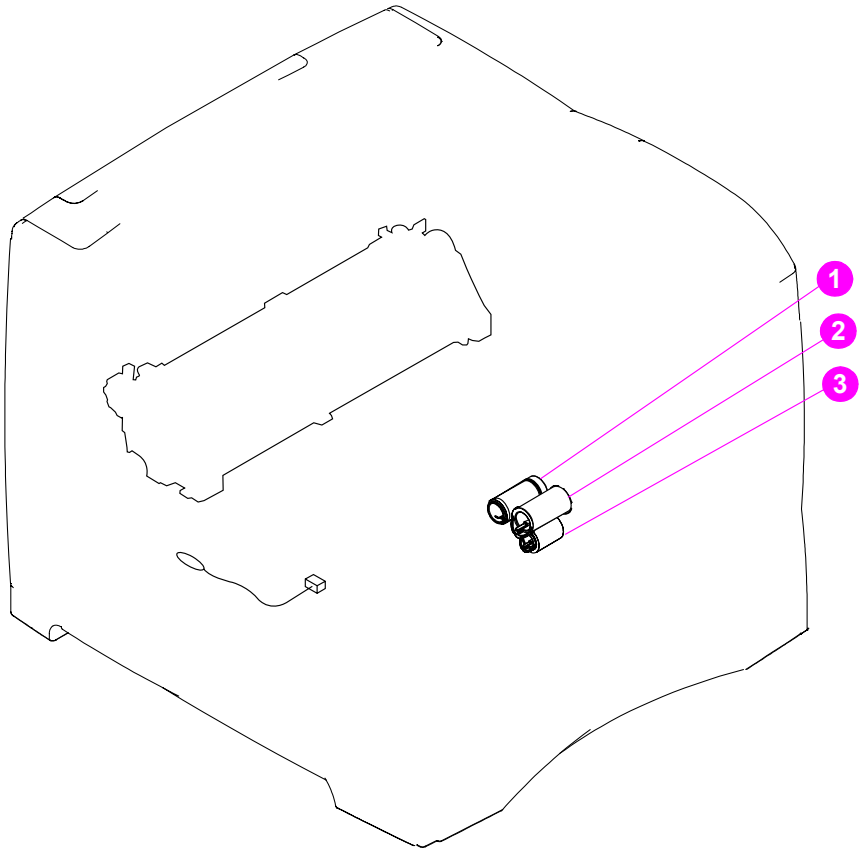

Figure 212. **Location of main printer parts (4 of 4)**

1. Pickup roller
2. Feed roller
3. Separation roller (in the tray)

Download Free Service Manual at http://printer1.blogspot.com

Printer switches and sensors

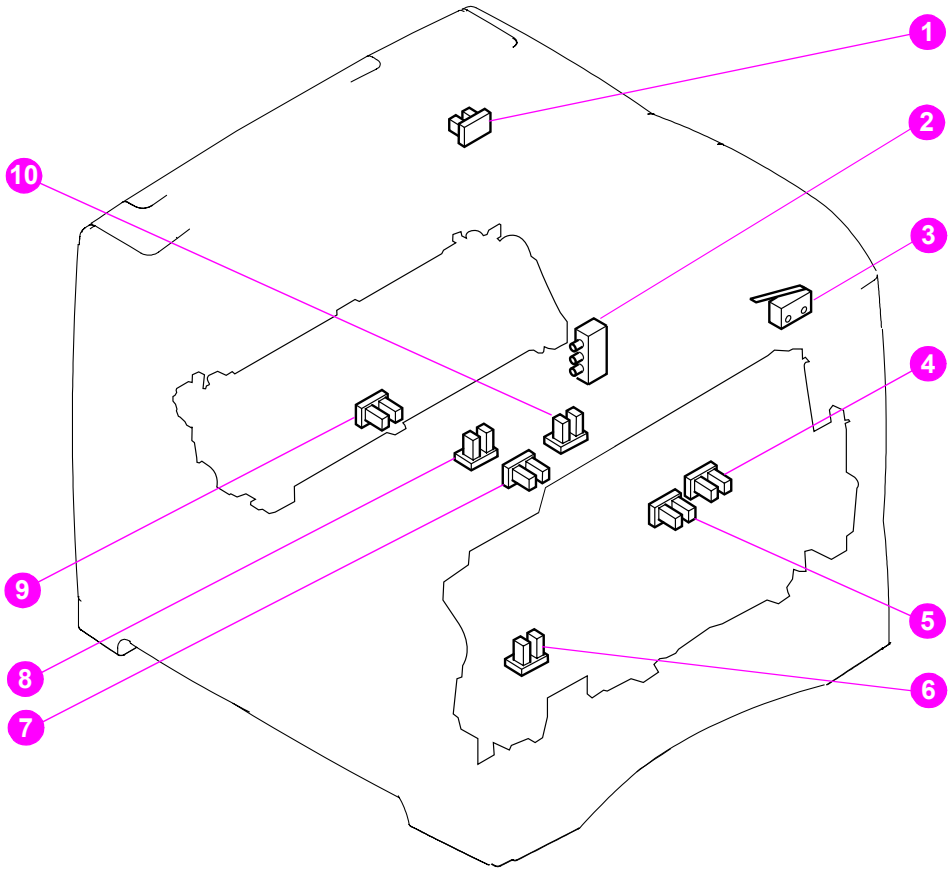

Figure 213. **Location of printer switches and sensors**

1. Output bin full sensor (PS104)
2. Paper size switch (SW102)
3. Top cover open switch (SW101)
4. Paper stack position sensor (PS107)
5. Tray 2 paper sensor (PS101)
6. Tray 1 paper sensor (on the tray 1 pickup assembly; PS105)
7. Pre-feed sensor (PS102)
8. Paper width sensor (PS106)
9. Fuser assembly delivery sensor (PS108)
10. Top of page sensor (PS103)

Download Free Service Manual at http://printer1.blogspot.com

Printer motors and fans

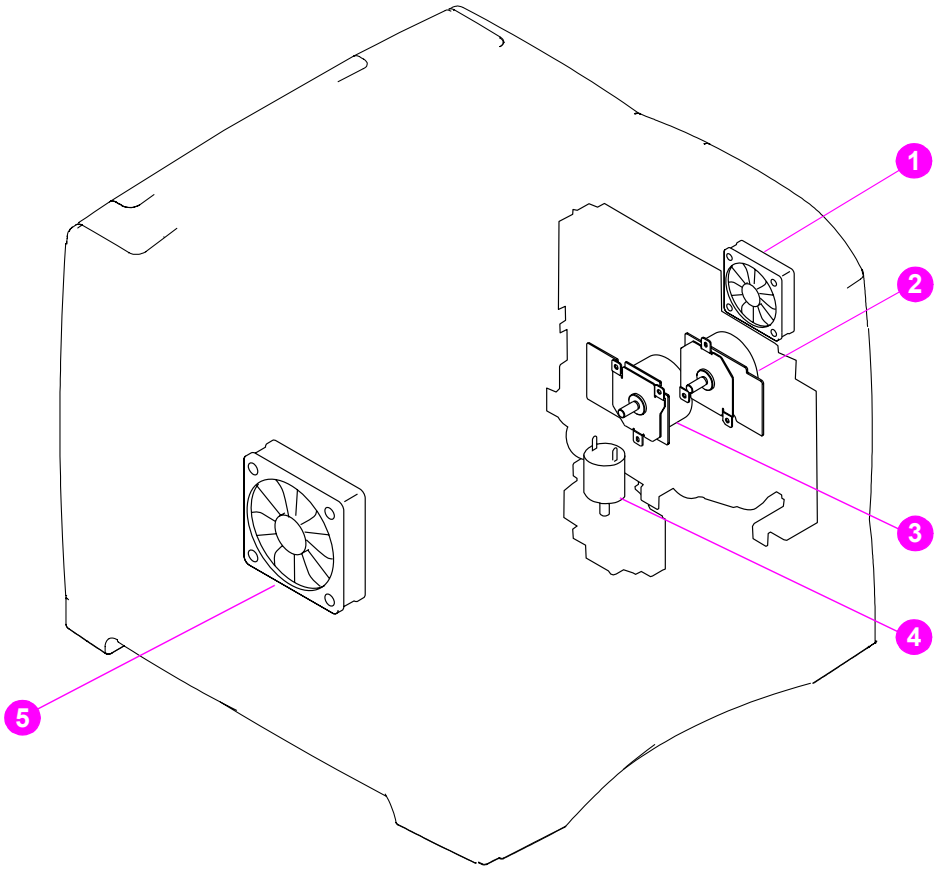

Figure 214. **Location of printer motors and fans**

1. Right-side cooling fan (HP LaserJet 4300 only)
2. Print cartridge motor (HP LaserJet 4300 only)
3. Main drive motor
4. Lifter-drive motor
5. Main cooling fan

Download Free Service Manual at http://printer1.blogspot.com

Printer PCAs

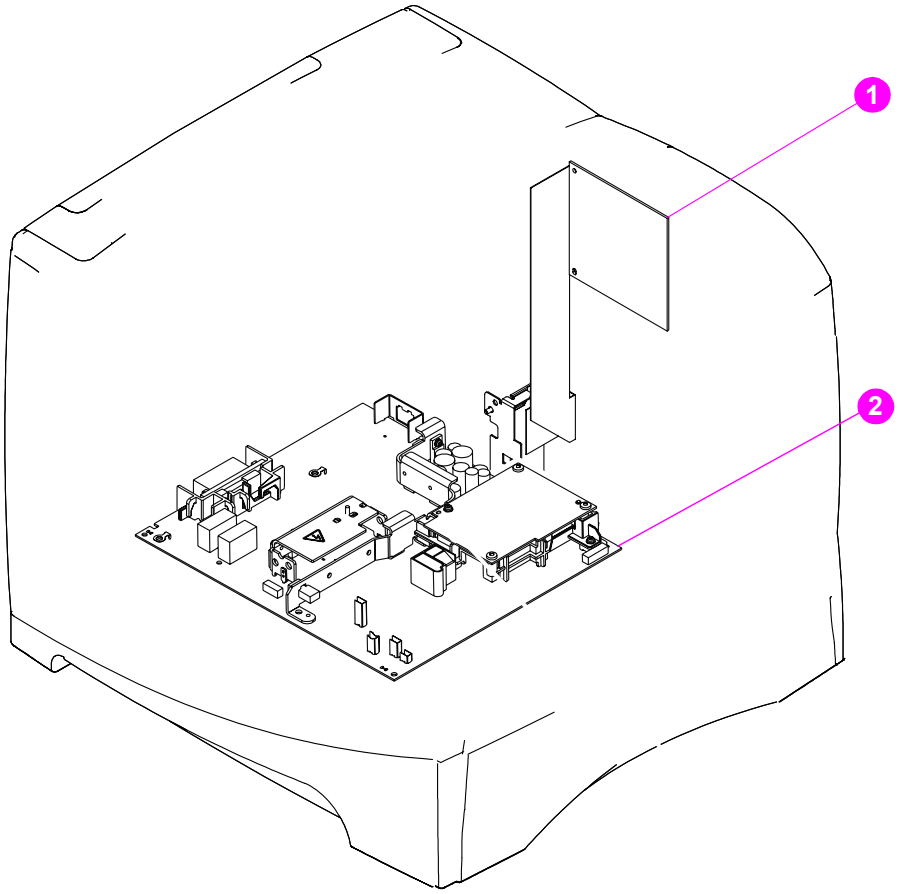

Figure 215. **Location of printer PCAs**

1. DC controller PCA
2. Power supply (high-voltage and low-voltage circuits)

Download Free Service Manual at http://printer1.blogspot.com

Accessory component locations

500-sheet feeder main parts

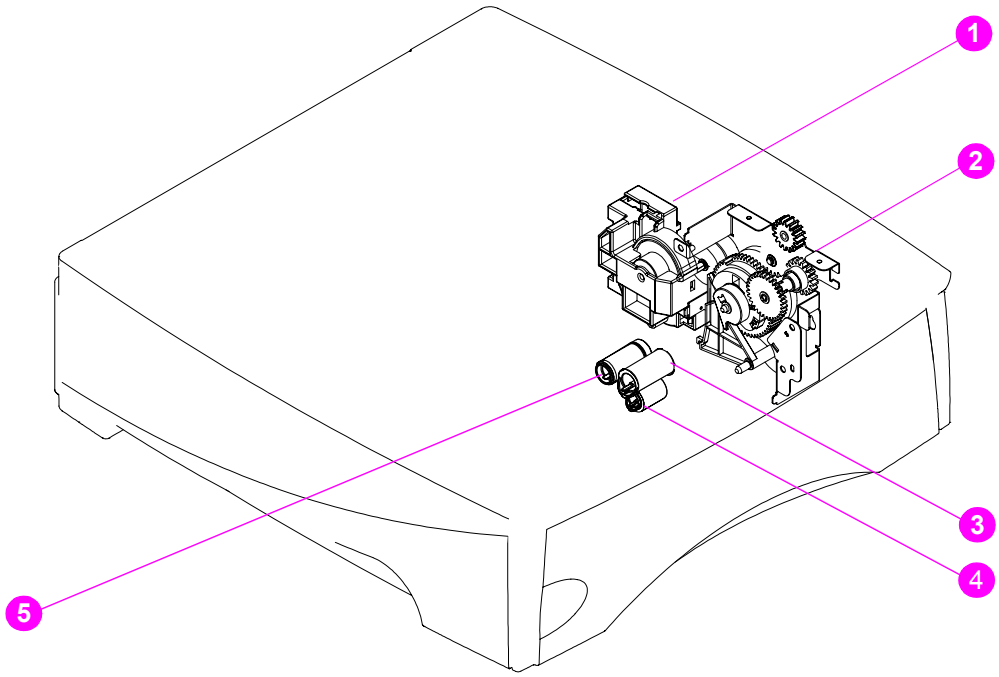

Figure 216. **Location of 500-sheet paper feeder main parts**

1. 500-sheet feeder lifter drive assembly
2. 500-sheet feeder pickup gear assembly
3. 500-sheet feeder feed roller
4. 500-sheet feeder separation roller (in the tray)
5. 500-sheet feeder pickup roller

Download Free Service Manual at http://printer1.blogspot.com

500-sheet feeder switches, sensors, solenoids, and PCAs

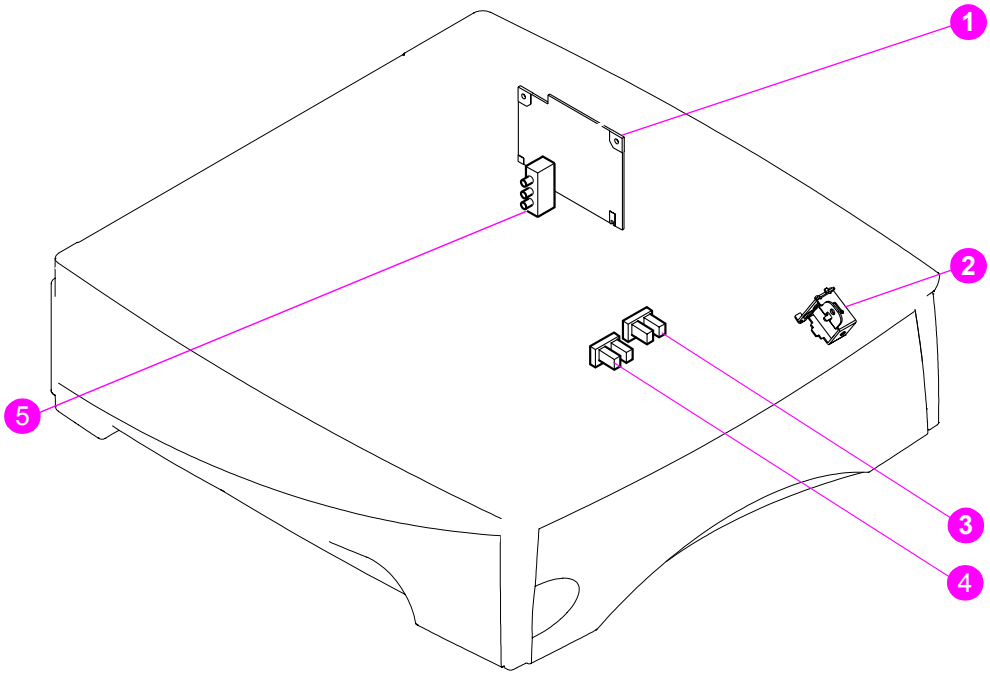

Figure 217. **Location of 500-sheet paper feeder switches, sensors, solenoids, and PCAs**

1. 500-sheet feeder control PCA
2. 500-sheet feeder paper pickup solenoid (SL801)
3. 500-sheet feeder paper stack position sensor (PS802)
4. 500-sheet feeder paper sensor (PS801)
5. 500-sheet feeder paper size switch (SW801)

Download Free Service Manual at http://printer1.blogspot.com

1,500-sheet feeder main parts

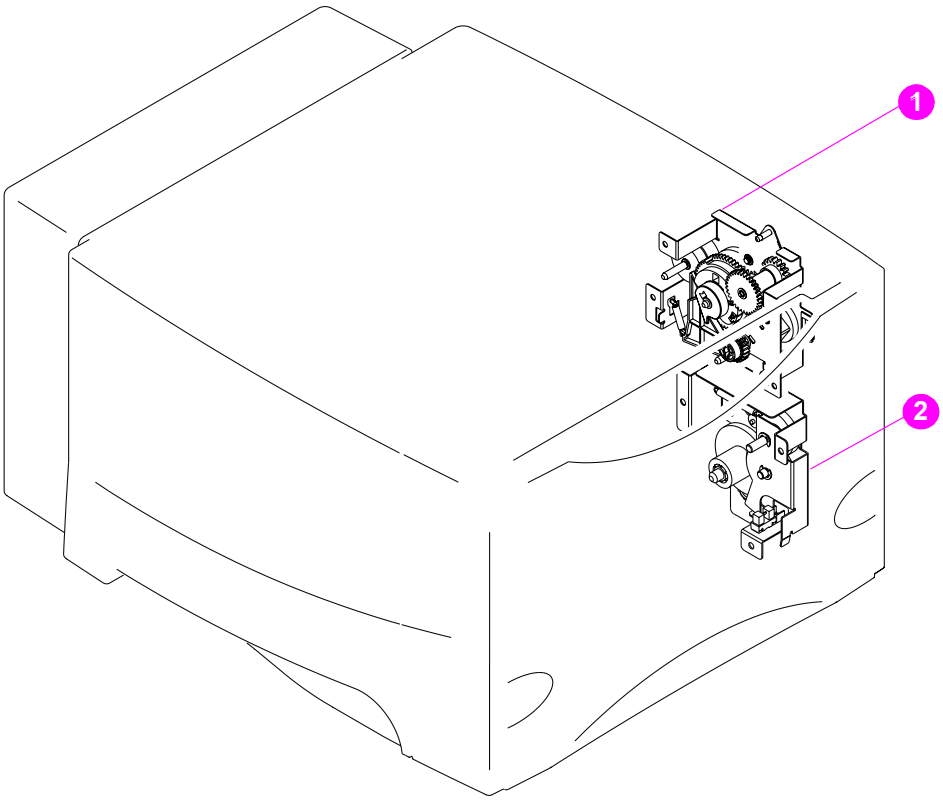

Figure 218. **Location of 1,500-sheet paper feeder main parts (1 of 2)**

1. 1,500-sheet feeder lifter-drive assembly
2. 1,500-sheet feeder pickup-drive assembly

Download Free Service Manual at http://printer1.blogspot.com

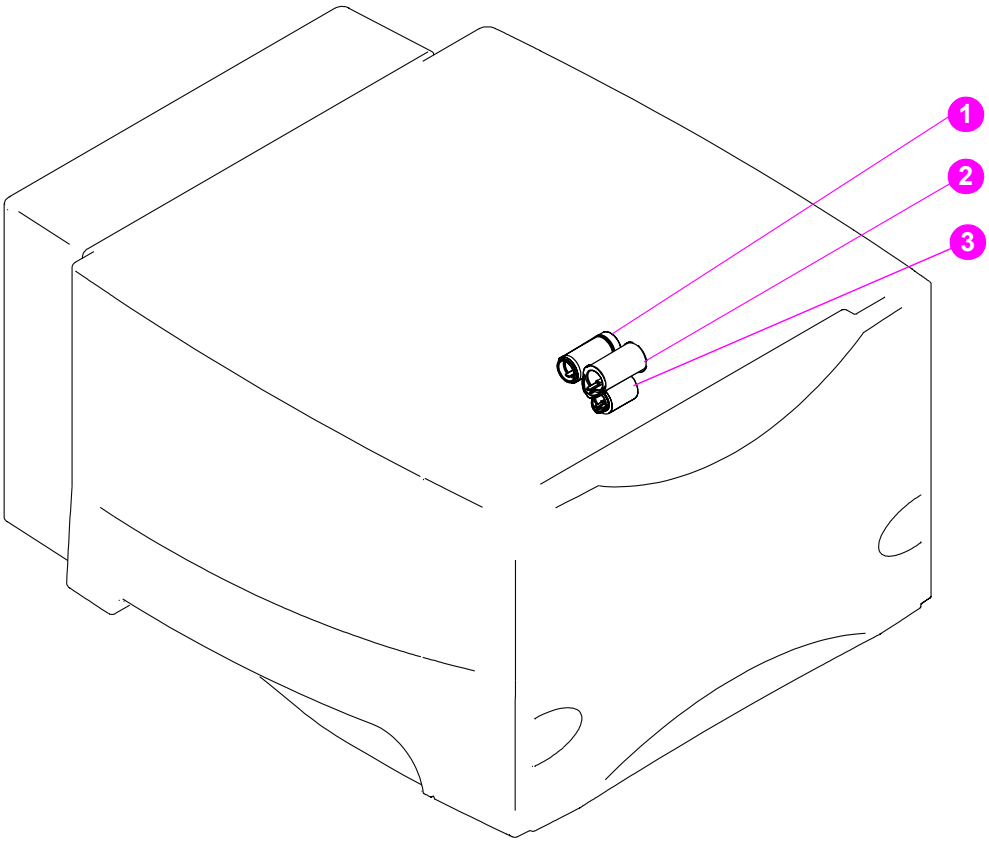

Figure 219. **Location of 1,500-sheet paper feeder main parts (2 of 2)**

1. 1,500-sheet feeder feed roller
2. 1,500-sheet feeder pickup roller
3. 1,500-sheet feeder separation roller (in the door)

Download Free Service Manual at http://printer1.blogspot.com

1,500-sheet feeder switches, sensors, solenoids, and PCAs

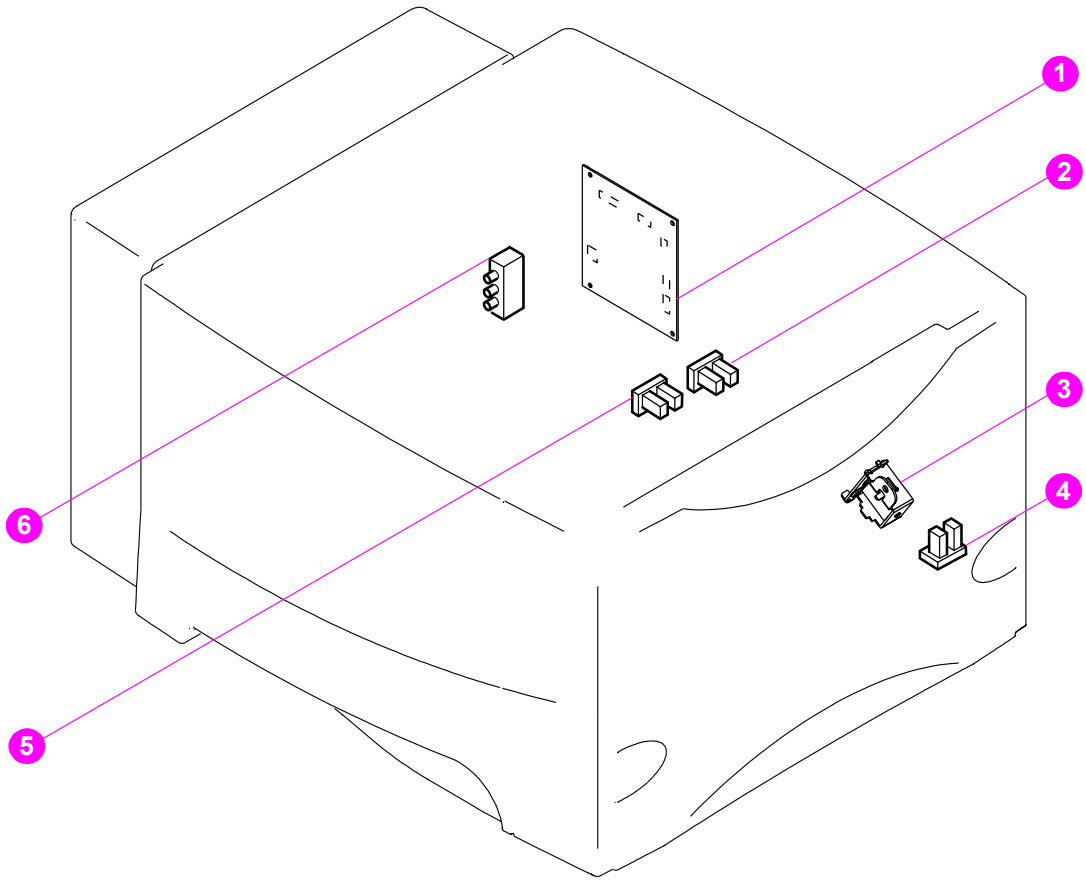

Figure 220. **Location of 1,500-sheet switches, sensors, solenoids, and PCAs**

1. 1,500-sheet feeder control PCA
2. 1,500-sheet feeder paper sensor (SR3)
3. 1,500-sheet feeder paper pickup solenoid (SL1)
4. 1,500-sheet feeder door sensor (SR1)
5. 1,500-sheet feeder paper stack position sensor (SR2)
6. 1,500-sheet feeder paper size sensor (SW1)

Download Free Service Manual at http://printer1.blogspot.com

Stapler/stacker stapler assembly

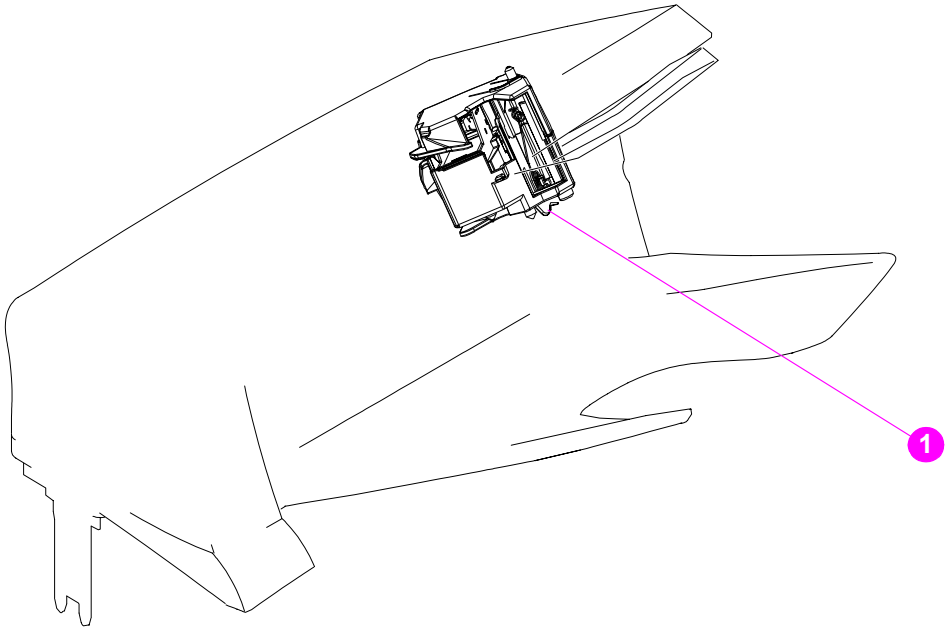

Figure 221. **Location of the stapler/stacker stapler unit**

1. Stapler unit (stapler/stacker accessory only)

Download Free Service Manual at http://printer1.blogspot.com

Stacker and stapler/stacker switches and sensors

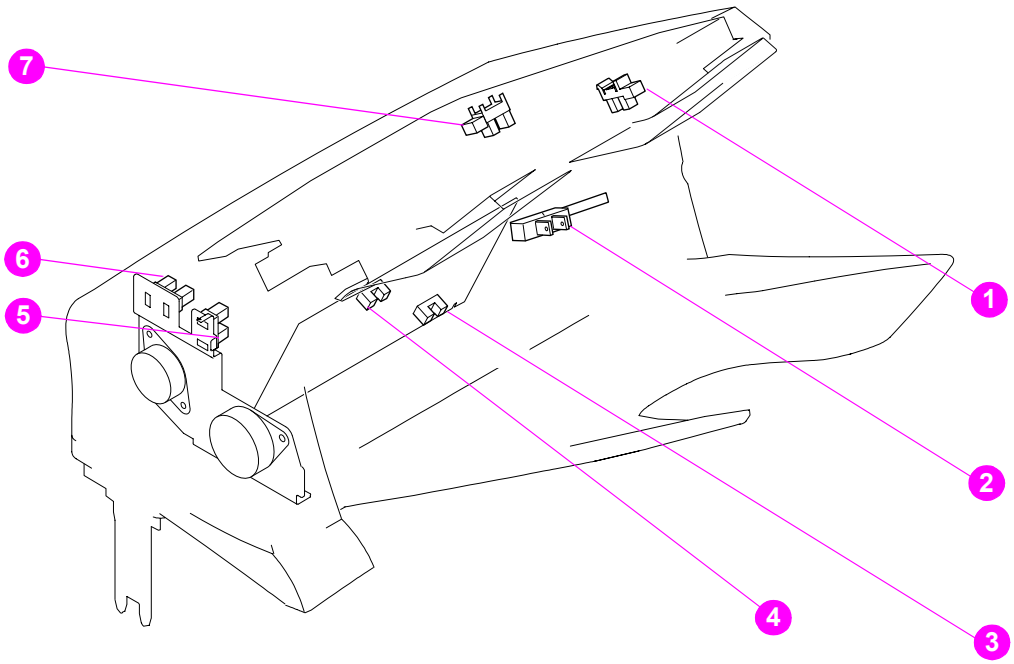

Figure 222. **Location of the stacker and stapler/stacker switches and sensors**

1. Jogger home position sensor (stapler/stacker only; PS1105)
2. Door open switch (SW1101)
3. Paper inlet sensor (PS1101)
4. Paper delivery sensor (PS1102)
5. Delivery roller disengaging sensor (stapler/stacker only; PS1104))
6. Paddle home position sensor (stapler/stacker only; PS1103)
7. Paper full sensor (PS1106)

Download Free Service Manual at http://printer1.blogspot.com

Stacker and stapler/stacker motors and solenoids

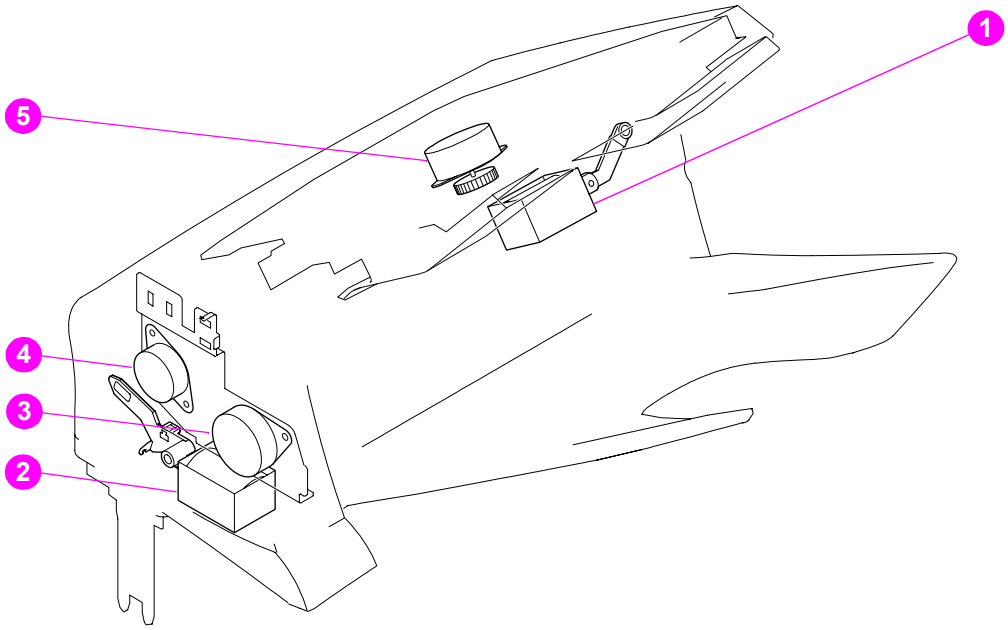

Figure 223. **Location of the stacker and stapler/stacker motors and solenoids**

1. Clamp solenoid (stapler/stacker only; SL1102)
2. Deflector solenoid (SL1101)
3. Feed mechanism and motor (M1103)
4. Paddle mechanism and motor (stapler/stacker only; M1101)
5. Jogger mechanism and motor (stapler/stacker only; M1102)

Download Free Service Manual at http://printer1.blogspot.com

Stacker and stapler/stacker PCAs

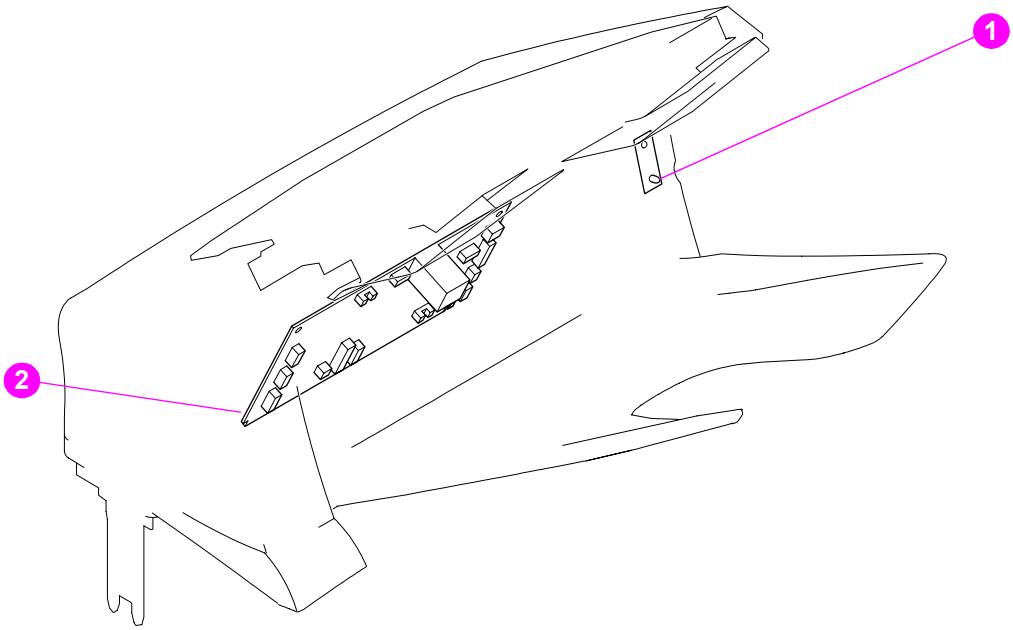

Figure 224. **Location of the stacker and stapler/stacker PCAs**

1. Stacker or staple/stacker LED PCA
2. Stacker or staple/stacker driver PCA

Download Free Service Manual at http://printer1.blogspot.com

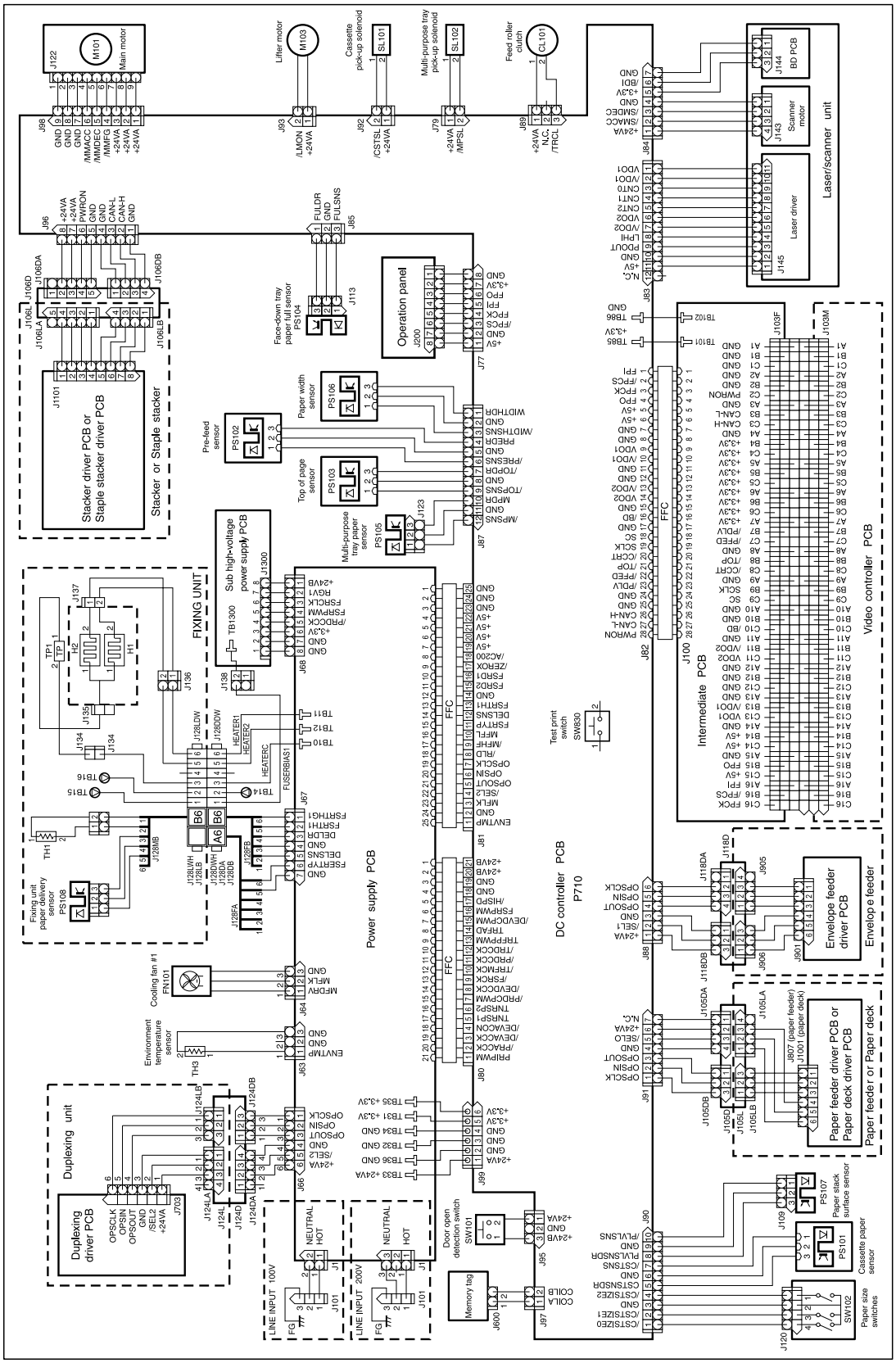

Figure 225. **HP LaserJet 4200 wiring diagram**

Download Free Service Manual at http://printer1.blogspot.com

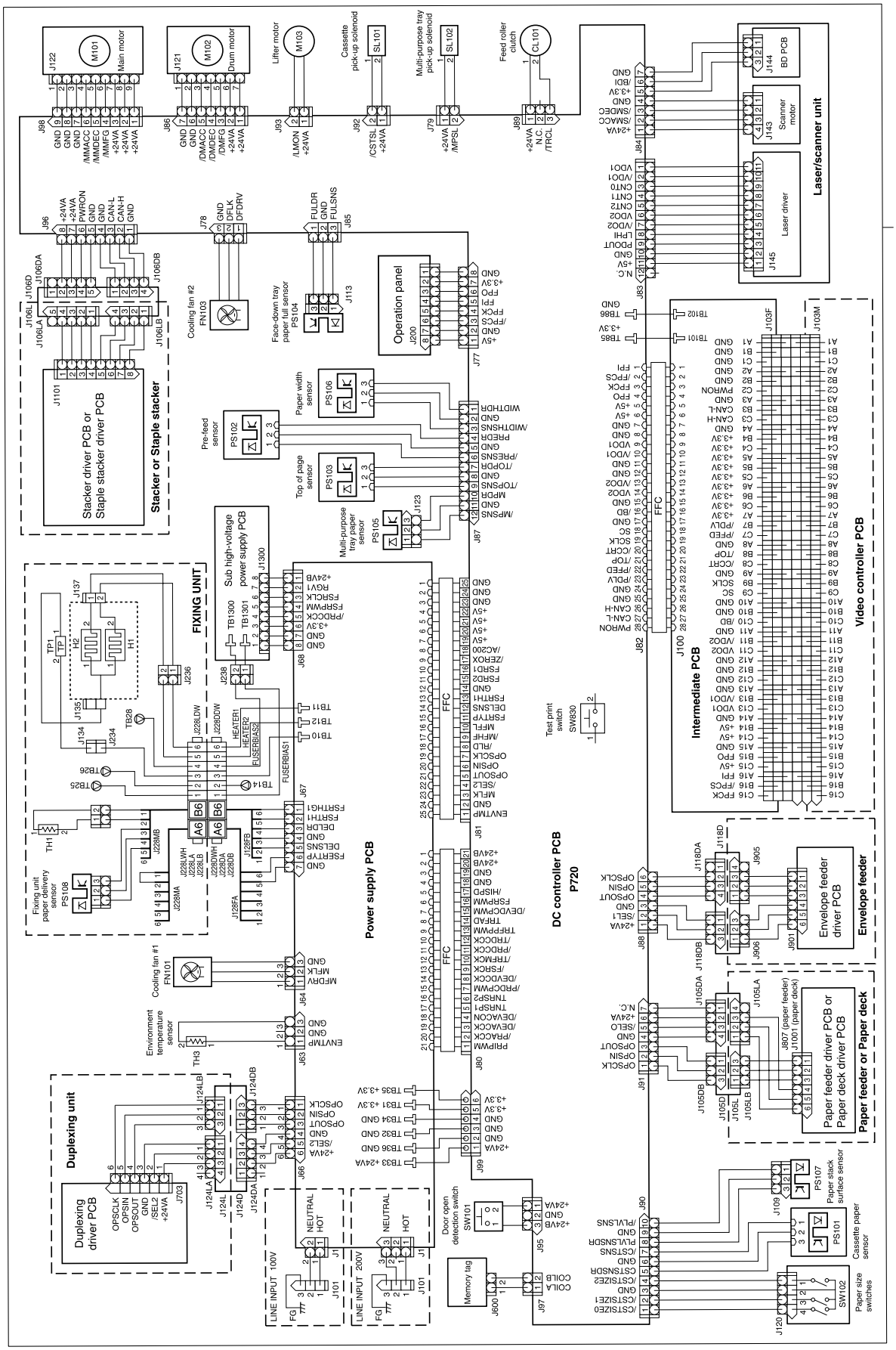

Figure 226. **HP LaserJet 4300 wiring diagram**

Download Free Service Manual at http://printer1.blogspot.com

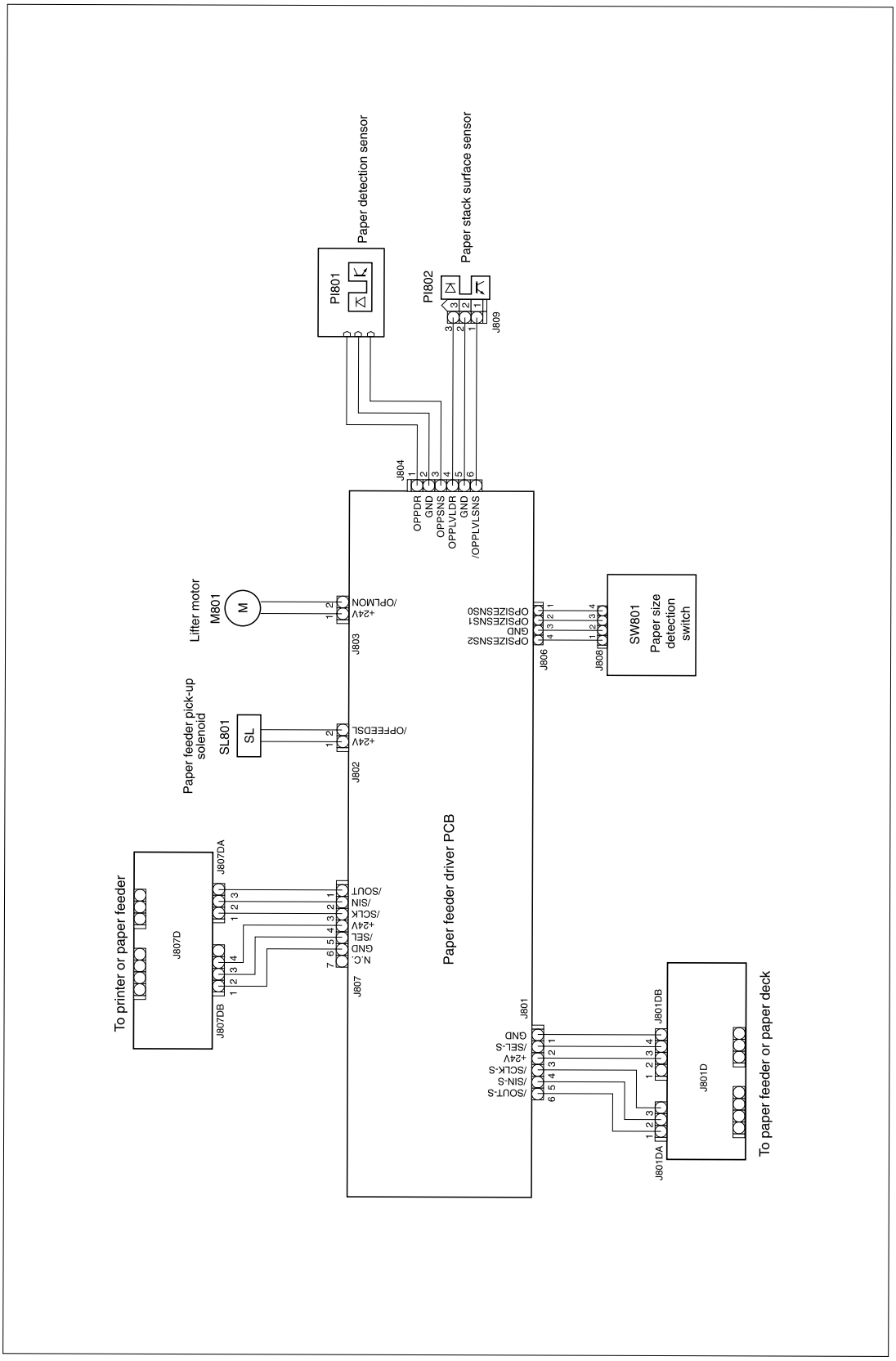

Figure 227. **500-sheet feeder wiring diagram**

Download Free Service Manual at http://printer1.blogspot.com

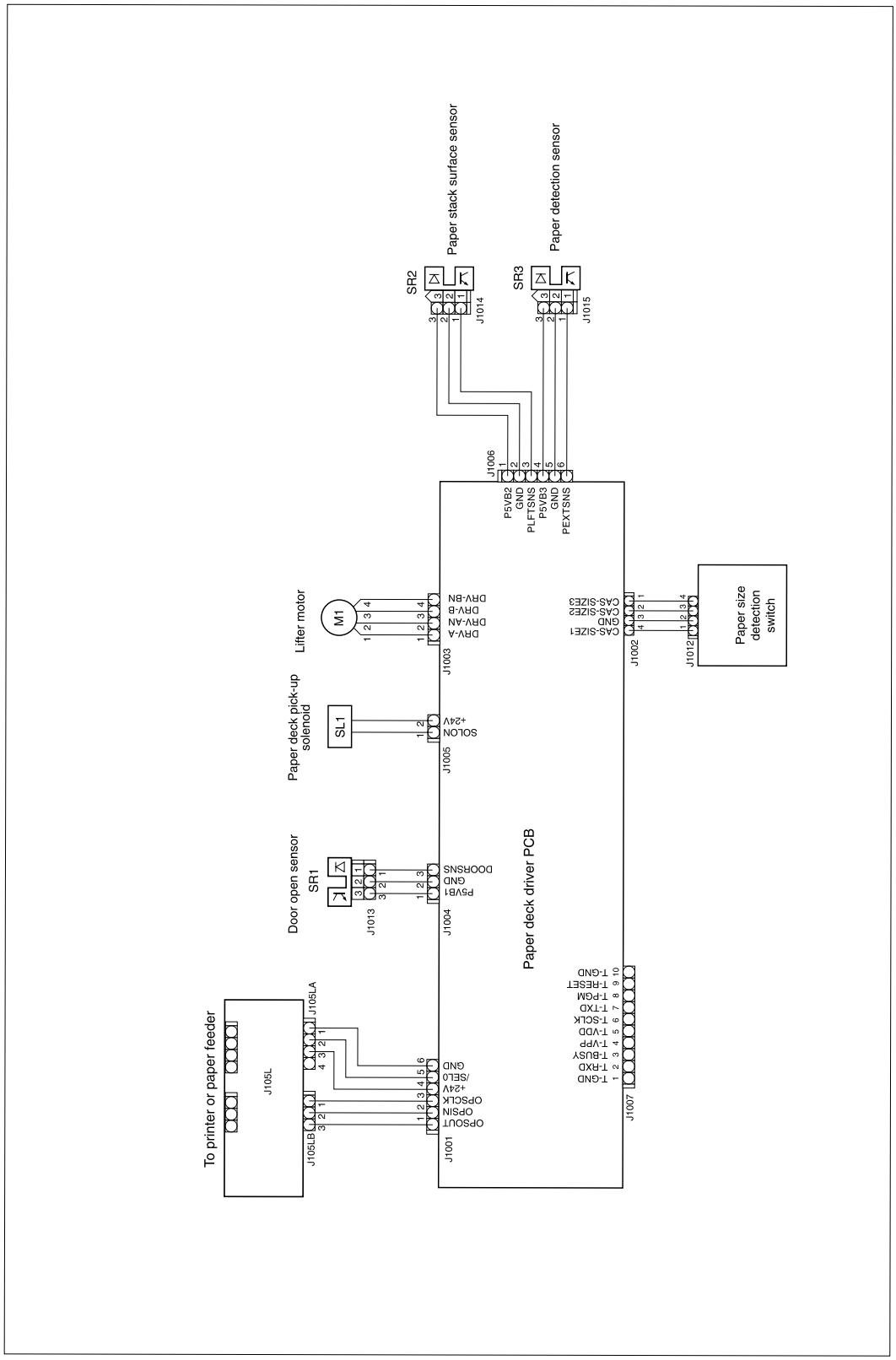

Figure 228. **1,500-sheet feeder wiring diagram**

Download Free Service Manual at http://printer1.blogspot.com

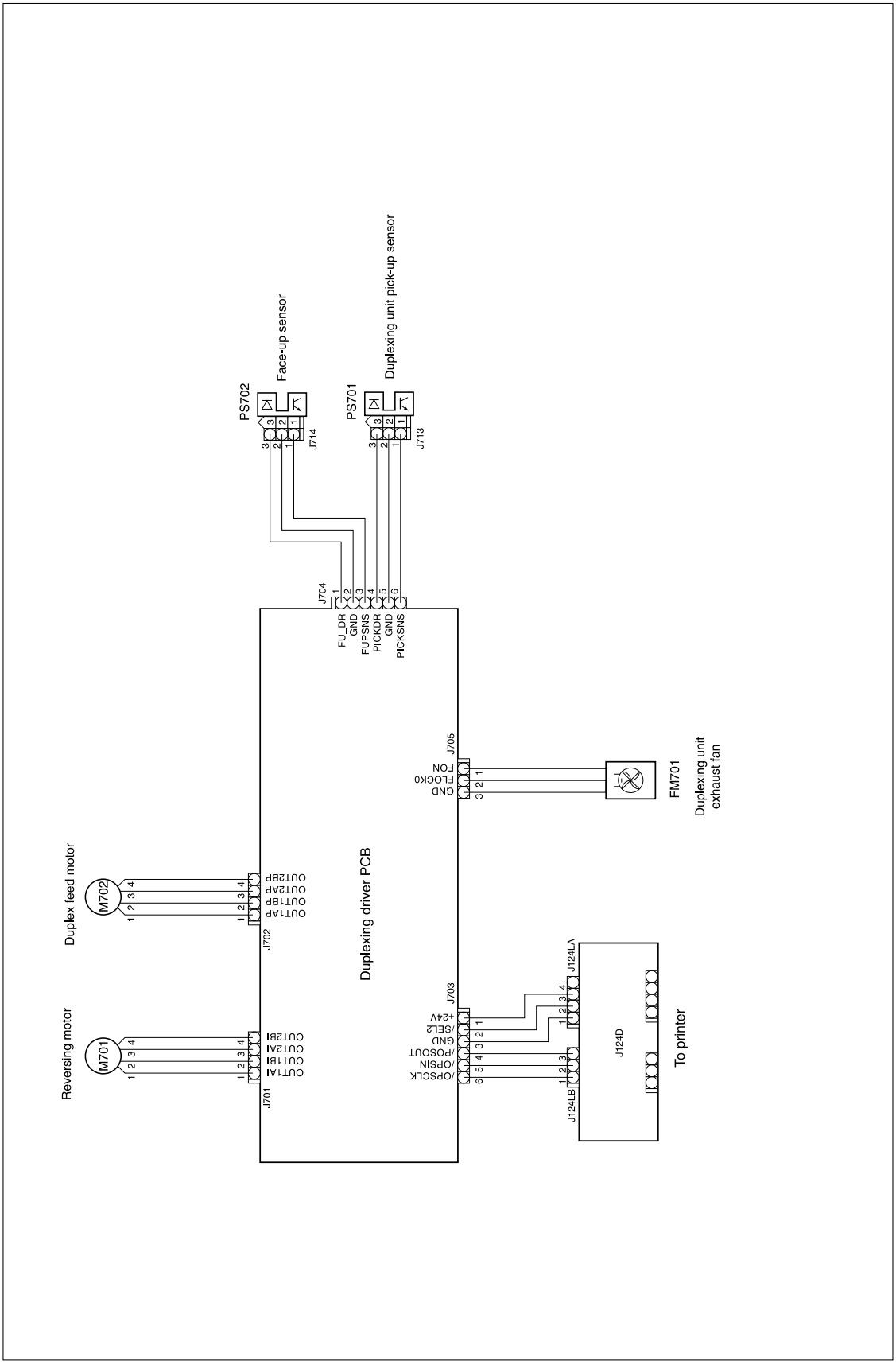

Figure 229. **Duplex accessory wiring diagram**

Download Free Service Manual at http://printer1.blogspot.com

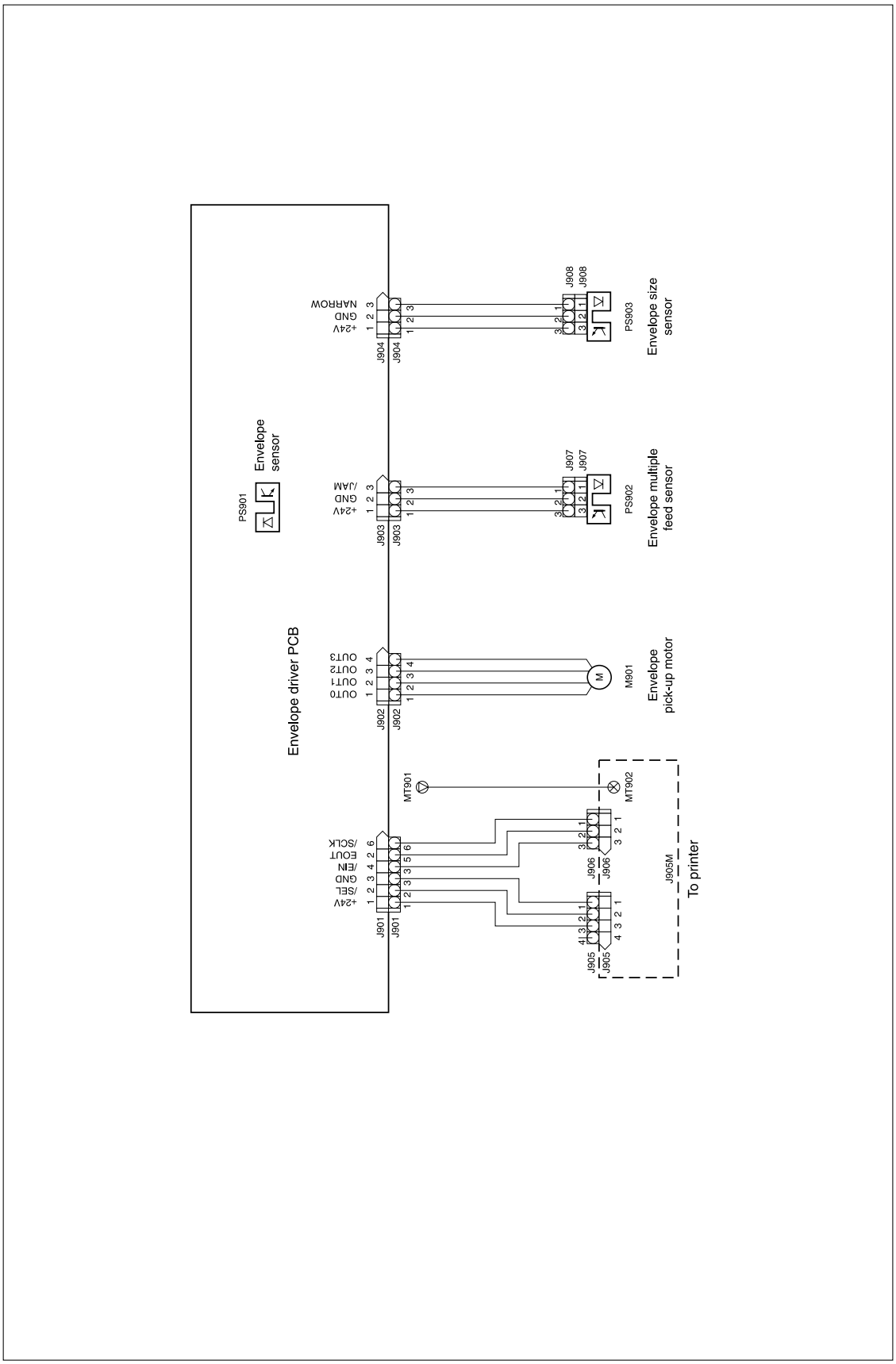

Figure 230. **Envelope feeder accessory wiring diagram**

Download Free Service Manual at http://printer1.blogspot.com

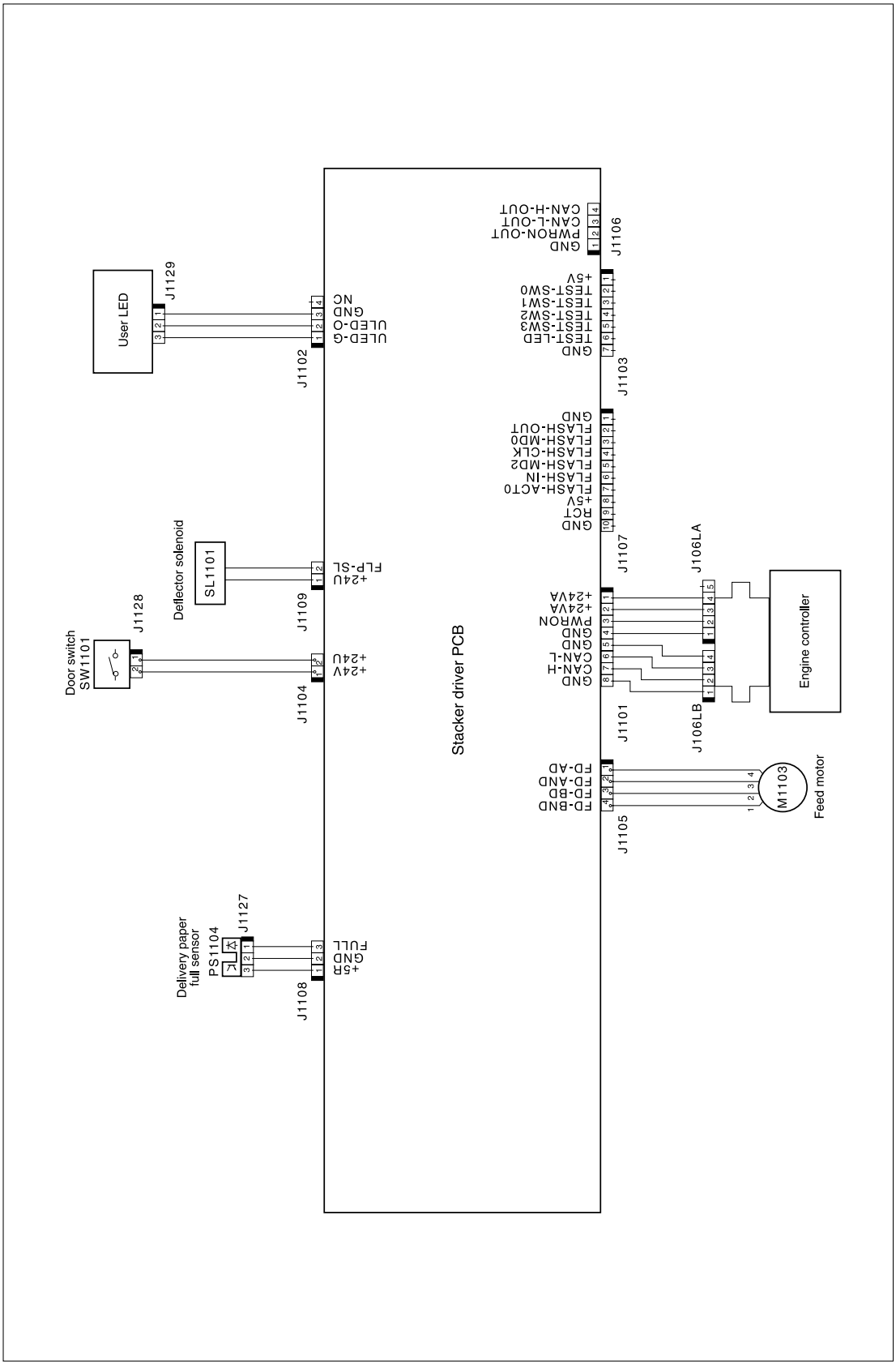

Figure 231. **Stacker accessory wiring diagram**

Download Free Service Manual at http://printer1.blogspot.com

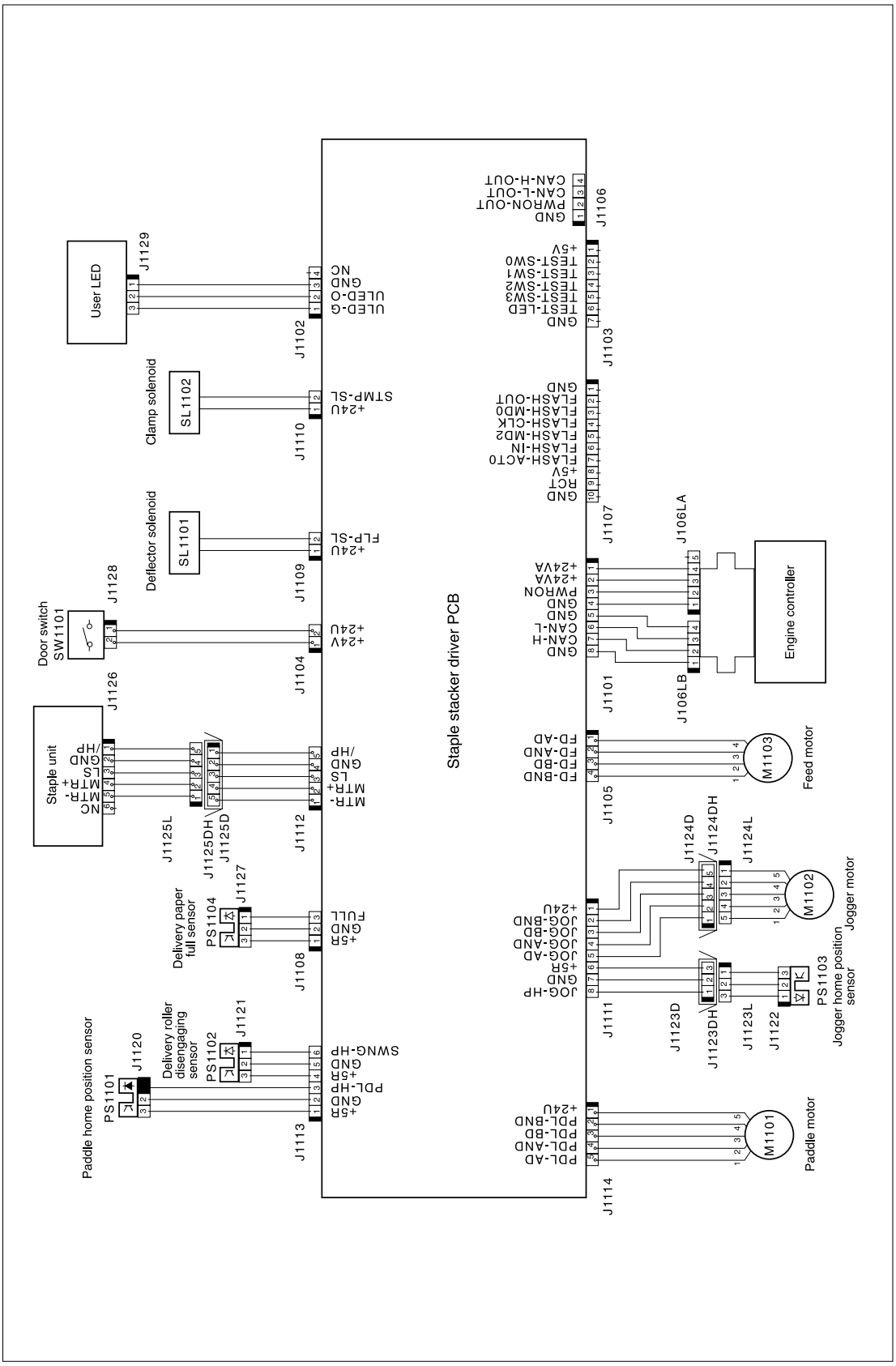

Figure 232. **Stapler/stacker accessory wiring diagram**

Download Free Service Manual at http://printer1.blogspot.com

DC controller block diagram

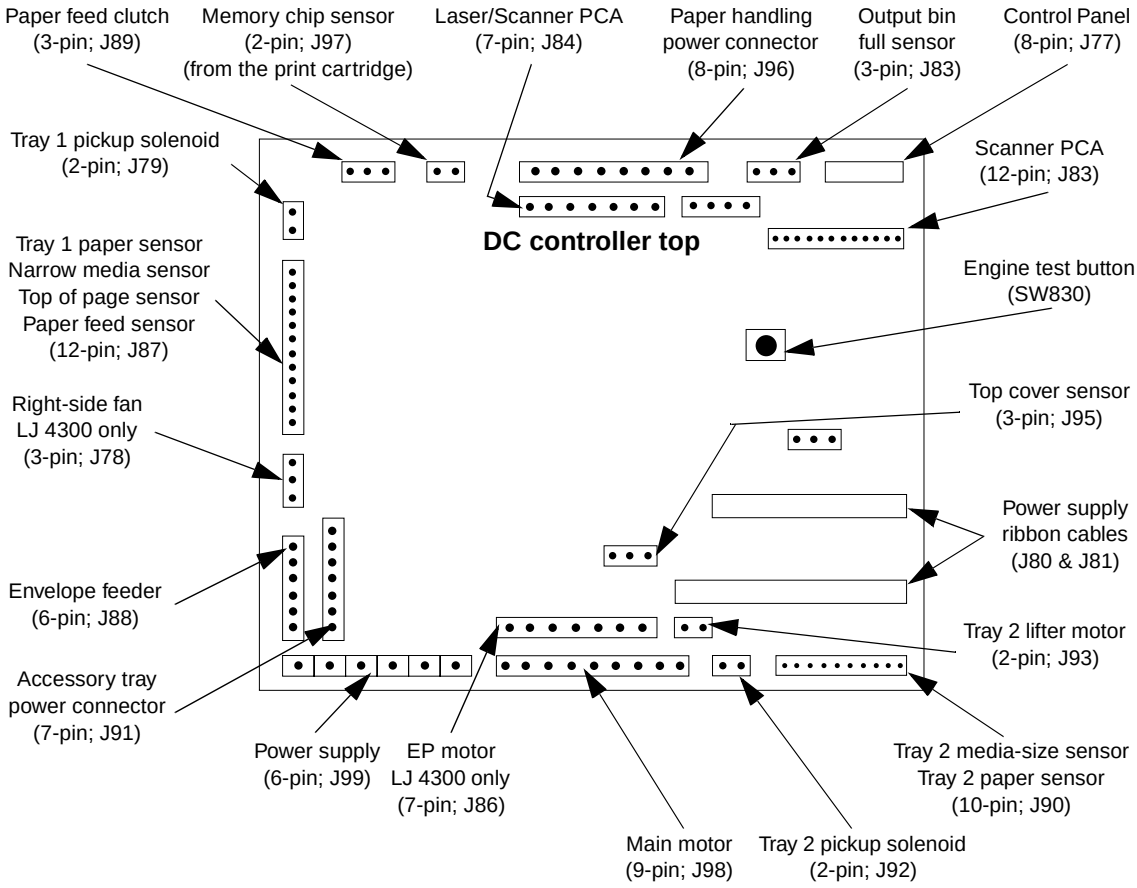

Figure 233. **DC controller connectors diagram**

Download Free Service Manual at http://printer1.blogspot.com

General timing diagrams

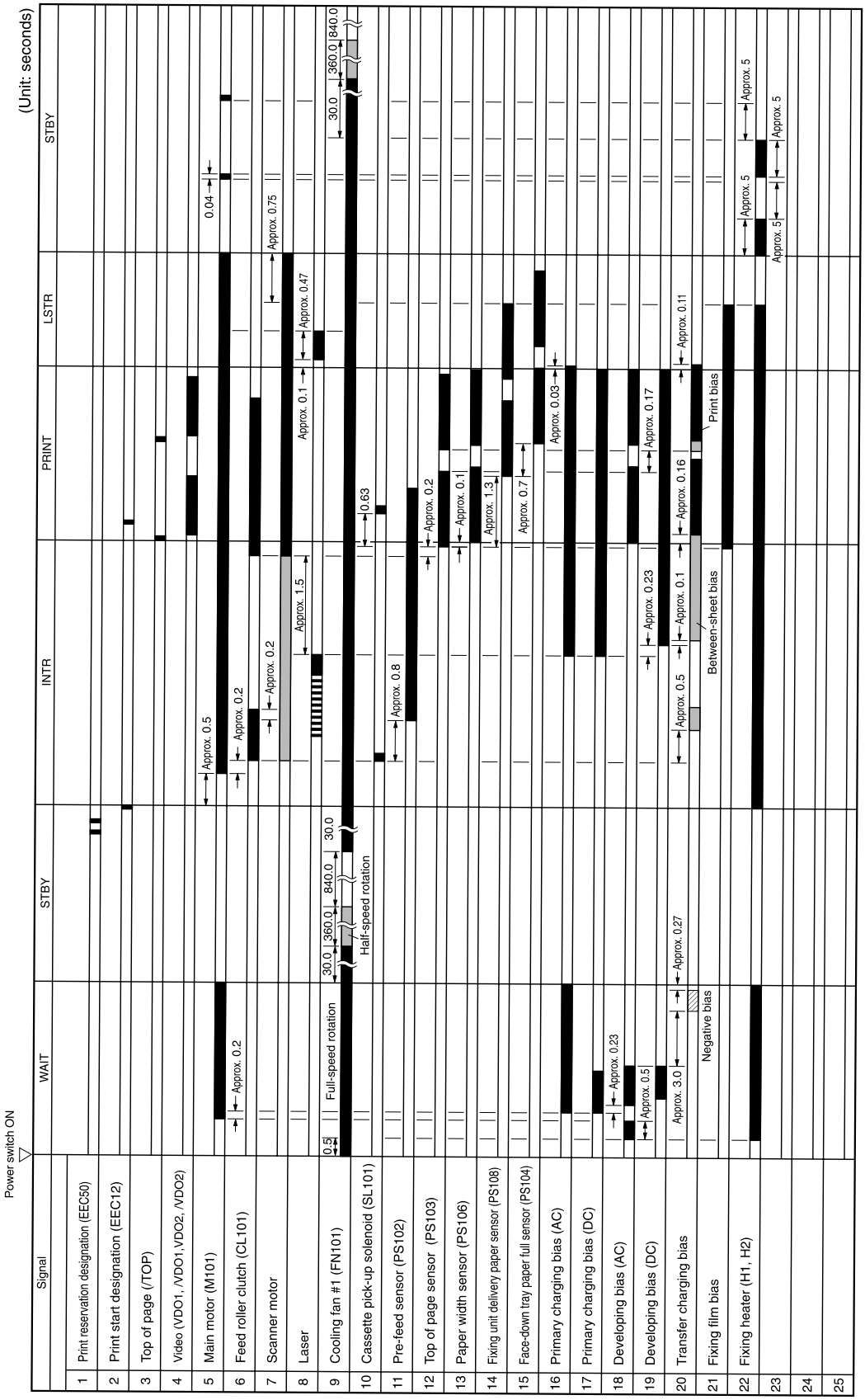

Figure 234. **HP LaserJet 4200 general timing diagram**

Download Free Service Manual at http://printer1.blogspot.com

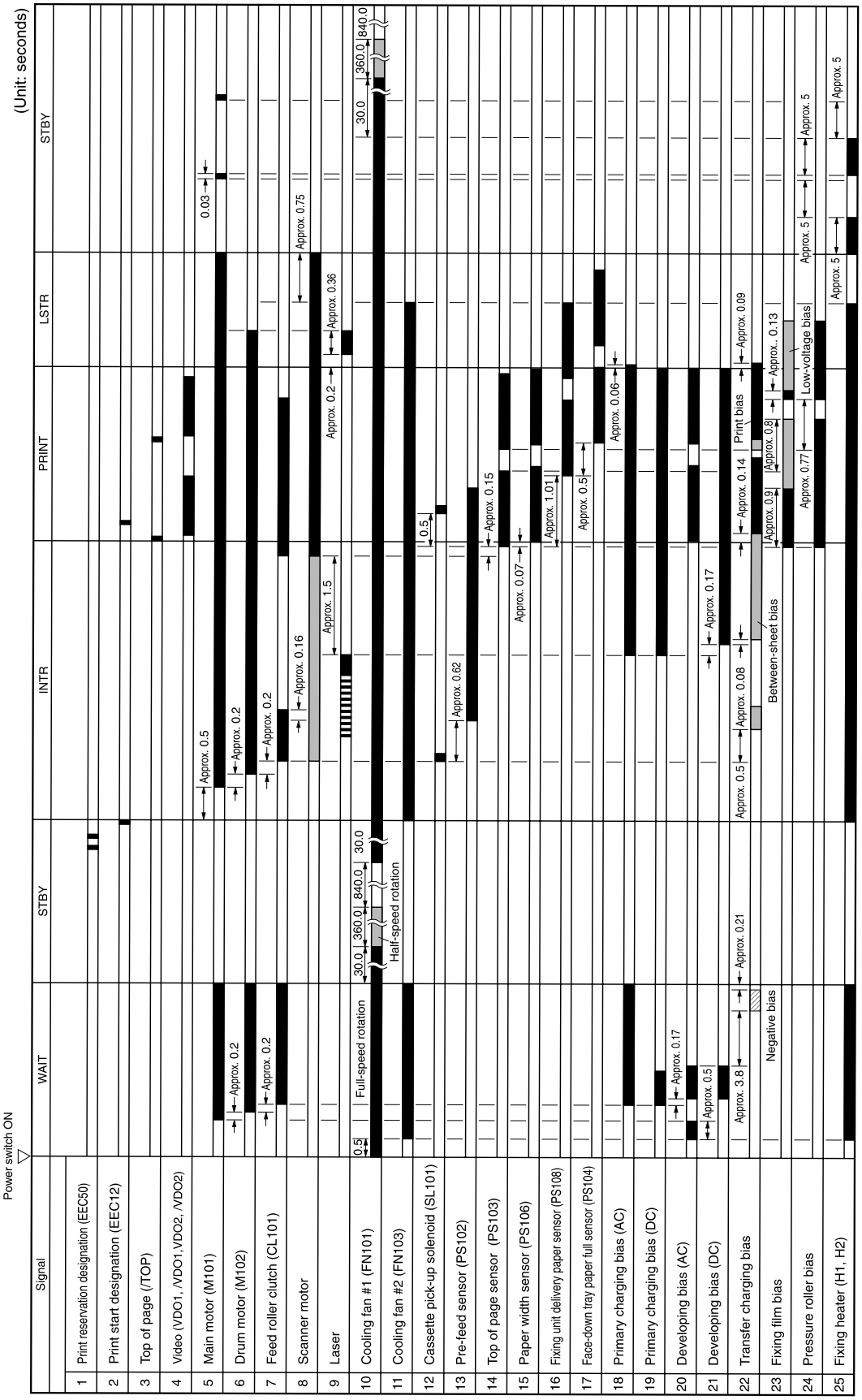

Figure 235. **HP LaserJet 4300 general timing diagram**

Download Free Service Manual at http://printer1.blogspot.com

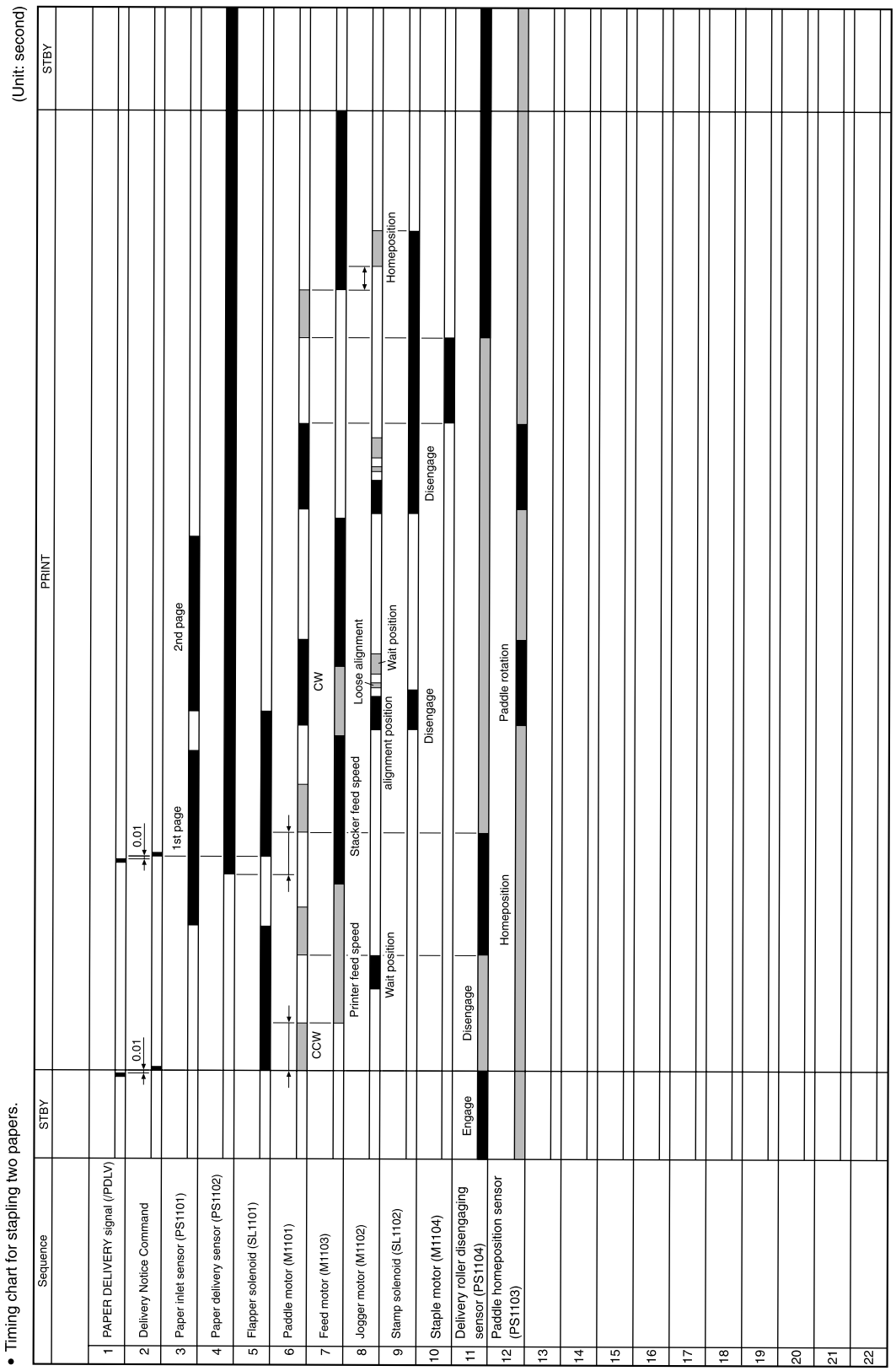

Figure 236. **Stapler/stacker timing diagram**

Download Free Service Manual at http://printer1.blogspot.com

Download Free Service Manual at http://printer1.blogspot.com

8 Parts and diagrams

Contents

Ordering parts, supplies, and getting support 362
Ordering information 362
Related documentation and software 362
Support 362
HP-authorized resellers and support 363
HP service agreements 363
HP PartnerCare 363
Accessories and supplies 364
How to use the parts lists and diagrams 367
Parts diagrams and lists 368

Download Free Service Manual at http://printer1.blogspot.com

Ordering parts, supplies, and getting support

Ordering information

This chapter contains field replaceable unit (FRU) and accessory part numbers. Replacement parts can be ordered from the HP Services. Go to http://www.hp.com/go/parts/ for information about ordering service parts in your area. Go to http://www.hp.com/go/partsinfo/ for the online HP service parts identification tool (HP PartSurfer).

CAUTION Use only the parts and accessories that have been specifically designed for this printer. Order accessories from an authorized HP service or support provider, or online at http://www.hp.com.

Note Parts that have no item number or part number listed are not field replacement parts and cannot be ordered.

Related documentation and software

Order documentation and software from the sites listed in table 81.

Support

Table 81. Technical support websites

HP Connect Online. (for HP partners).	http://www.connect-online.hp.com HP Connect Online is an Internet site that is created exclusively for our partners. You can easily find all the HP information that you need for your daily business. And you can get it earlier than from any other site.
HP Customer Care Online. Software drivers, support documentation, and answers to frequently asked questions.	http://www.hp.com Select your country/ region in the “select a country or region” field located on the web page. Select the support block.
HP Technical Training. Classes and schedules.	USA: http://www.partner.americas.hp.com Canada: http://www.canada.hp.com Asia: http://partnercare.asiapac.hp.com Latin America: http://www.conecta.latinamerica.hp.com
Parts. Parts information.	http://www.hp.com/go/parts/ http://www.hp.com/go/partsinfo/ http://www.partsurfer.hp.com
Supplies/paper. Ordering information.	USA: http://www.hp.com/go/orderssupplies-na Canada: http://www.hp.ca/catalog/supplies Europe: http://www.hp.com/go/supplies Asia Pacific: http://www.hp.com/paper

Download Free Service Manual at http://printer1.blogspot.com

HP provides free telephone support during the product warranty period. When you call, you will be connected to a responsive team waiting to help you. For the number you should call in your country/region, see the support sheet that came in the box with your printer. Before calling have the following information available:

- product name (for example, HP LaserJet 4300 dtns)
- product serial number (found on the underside of the control-panel door.
- the date of purchase of your printer and a description of the problem you are experiencing

Test the software installation. Attempt to print a test page from the software program. Try reinstalling the software. If reinstalling the software does not correct the problem, see the Readme file on the CD-ROM that came with the printer, or call the phone number for your country/region (phone numbers are listed on the support sheet that came in the box with the printer). You can also find answers to frequently asked questions at the following websites:

- htpp//:www.hp.com/support/lj4200
- htpp//:www.hp.com/support/lj4300

HP-authorized resellers and support

To locate HP-authorized resellers and support, call (1) (800) 243-9816 in the U.S. or (1) (800) 387-3867 in Canada. See "Worldwide service and support offices" on page 30 for areas outside of North America.

HP service agreements

For information about HP service agreements, call (1) (800) 743-8305 in the U.S. or (1) (800) 268-1221 in Canada.

HP PartnerCare

You can use the following information to contact HP PartnerCare:

- for PartnerShip Web, http://www.partner.americas.hp.com
- for Connect Online, http://www.connect-online.hp.com
- for Asia Pacific countries/regions, http://partnercare.asiapac.hp.com
- for Canada Partner, http://www.canada.hp.com
- for Latin America, http://www.conecta.latinamerica.hp.com

Download Free Service Manual at http://printer1.blogspot.com

Accessories and supplies

The following items are available through your local authorized HP Services provider. To find a dealer near you, see “Ordering information” on page 362 or “Worldwide service and support offices” on page 30.

Table 82. Paper-handling accessories

Item	Product or part number	Exchange number
500-sheet tray and feeder unit	Q2440A	Q2240-69001
500-sheet tray	Q2440	Q2441-69001
1,500-sheet tray and feeder unit	Q2444A	Q2444-69001
Envelope feeder	Q2438A	Q2438-69001
Duplexer (duplex printing accessory)	Q2439A	Q2439-69001
500-sheet stacker	Q2442A	Q2442-69001
500-sheet stapler/stacker	Q2443A	Q2443-69001
1,000-staple cartridge	Q3216-60500	none
Stapler unit	Q2443-67903	none
Storage cabinet	Q2445A	Q2445-69001
Separation pad	RL1-0007-000CN	none
Tray 1 pickup roller	RL1-0019-000CN	none
Paper feed/separation roller (500-sheet tray and 1,500-sheet tray)	RM1-0037-000CN	none
Paper pickup roller (500-sheet tray and 1,500-sheet tray)	RM1-0036-000CN	none

Download Free Service Manual at http://printer1.blogspot.com

Table 83. Memory, fonts, and mass storage

Item	Part number	Exchange number
Firmware DIMM (dual inline memory module)		
• HP LaserJet 4200 base model	Q2453-67920	none
• HP LaserJet 4200 all models except base model	Q2453-67901	none
• HP LaserJet 4300 all models	Q2453-67910	none
SDRAM DIMM (dual inline memory module)		
• 8 MB	C7842-67901	none
• 16 MB	C7843-67901	none
• 32 MB	C7845-67901	none
• 64 MB	Q1877-67901	none
• 128 MB	C9121-67901	none
Flash DIMM		
• 2 MB	C4286A	none
• 4 MB	C4287A	none
• 8 MB	C8530A	none
• 12 MB	C7867A	none
Font DIMM		
• Korean language	D4838A	none
• Simplified Chinese language	C4293A	none
• Traditional Chinese language	C4292A	none
EIO hard disk	J6054-61011	none

Table 84. Cables and interfaces

Item	Part number	Exchange number
Parallel cables		
• 2-meter IEEE-1284 cable	C2950A	none
• 3-meter IEEE-1284 cable	C2951A	none
EIO cards		
• Token Ring networks	J4167A	J4167-69001
• Fast Ethernet (10/100Base-TX single RJ-45 port)	J6057A	J6057-69001
• Connectivity card for USB, serial, and LocalTalk	J4135-61001	none

Download Free Service Manual at http://printer1.blogspot.com

Table 85. Printer maintenance kit and exchange parts

Item	Part number	Exchange number
Printer maintenance kit		
• 110-V printer kit (HP LaserJet 4200 series)	Q2429A	Q2429-69001
• 110-V printer kit (HP LaserJet 4300 series)	Q2436A	Q2436-69001
• 220-V printer kit (HP LaserJet 4200 series)	Q2430A	Q2430-69001
• 220-V printer kit (HP LaserJet 4300 series)	Q2437A	Q2437-69001
Formatter		
• HP LaserJet 4200	C9652A	C9651-69001
• HP LaserJet 4300	C9651A	C9652-69001
Print cartridge		
• HP LaserJet 4200 (12,000 pages)	Q1338-67901	
• HP LaserJet 4300 (18,000 pages)	Q1339-67901	
Laser/scanner assembly		
• HP LaserJet 4200	RM1-0173-000CN	Q2425-69001
• HP LaserJet 4300	RM1-0183-000CN	Q2431-69001
Item	**Part number**	**Exchange number**
Power supply		
• HP LaserJet 4200; 110-V	RM1-0019-000CN	Q2425-69002
• HP LaserJet 4300; 110-V	RM1-0107-000CN	Q2431-69002
• HP LaserJet 4200; 220-V	RM1-0020-000CN	Q2425-69003
• HP LaserJet 4300; 220-V	RM1-0108-000CN	Q2431-69003
Fuser		
• HP LaserJet 4200; 110-V	RM1-0013-000CN	Q2425-69004
• HP LaserJet 4300; 110-V	RM1-0101-000CN	Q2431-69005
• HP LaserJet 4200; 220-V	RM1-0014-000CN	Q2425-69005
• HP LaserJet 4300; 220-V	RM1-0102-000CN	Q2431-69006

Download Free Service Manual at http://printer1.blogspot.com

Table 86. Documentation

Item	Part number	Description or use
Training materials		
Service training kit	Q2431-67907	A guide to HP LaserJet 4200 and HP LaserJet 4300 service training.
Training service and support manual on CDROM	Q2431-60114	
Print Media Guide For The Hp Laserjet Family Of Printers	5980-8424 ENUS	A guide to using paper and other print media with HP LaserJet printers (available only in English). To obtain an updated version of the media guide, go to http://www.hp.com/support/ljpaperguide.
HP LaserJet 4200/4300 series CD-ROM		An additional copy of the CD-ROM containing software, the *use* guide, and Readmes.
• English, French, Italian, Spanish, German, Dutch, Portuguese, Hebrew, Greek	Q2431-60104	
• English, Danish, Finnish, Norwegian, Swedish, Czech, Hungarian, Polish, Russian, Turkish, Arabic, French	Q2431-60105	
• English, Japanese, Korean, Simplified Chinese, Traditional Chinese, Thai	Q2431-60106	**Note:** The PCL 5e printer driver is not available on the Asian-language CD-ROM. You can download the PCL 5e driver from the Internet at http://www.hp.com/support/lj4200 or at http://www.hp.com/support/lj4300.
hp LaserJet 4200 *hp LaserJet4300* *start* (getting started guide)		You can download a copy of this guide from the Internet at http://www.hp.com/support/lj4200 or http://www.hp.com/support/lj4300.

How to use the parts lists and diagrams

The figures in this chapter illustrate the major field replaceable unit (RFU) assemblies and subassemblies in the HP LaserJet 4200/4300 series printers. A table (parts number list) follows each exploded assembly diagram. The tables list a reference number for each specific part, the part number, and a brief description of the part.

CAUTION When looking for a HP LaserJet 4200/4300 printer electrical part, pay careful attention to the voltage listed in the part description column to ensure that the component part number that you select is for the correct printer model.

Note Parts that do not have a reference number or part number are not RFU's, and cannot be ordered as individual replacement parts. However, all serviceable parts should be available as part of a larger operable subassembly.

Download Free Service Manual at http://printer1.blogspot.com

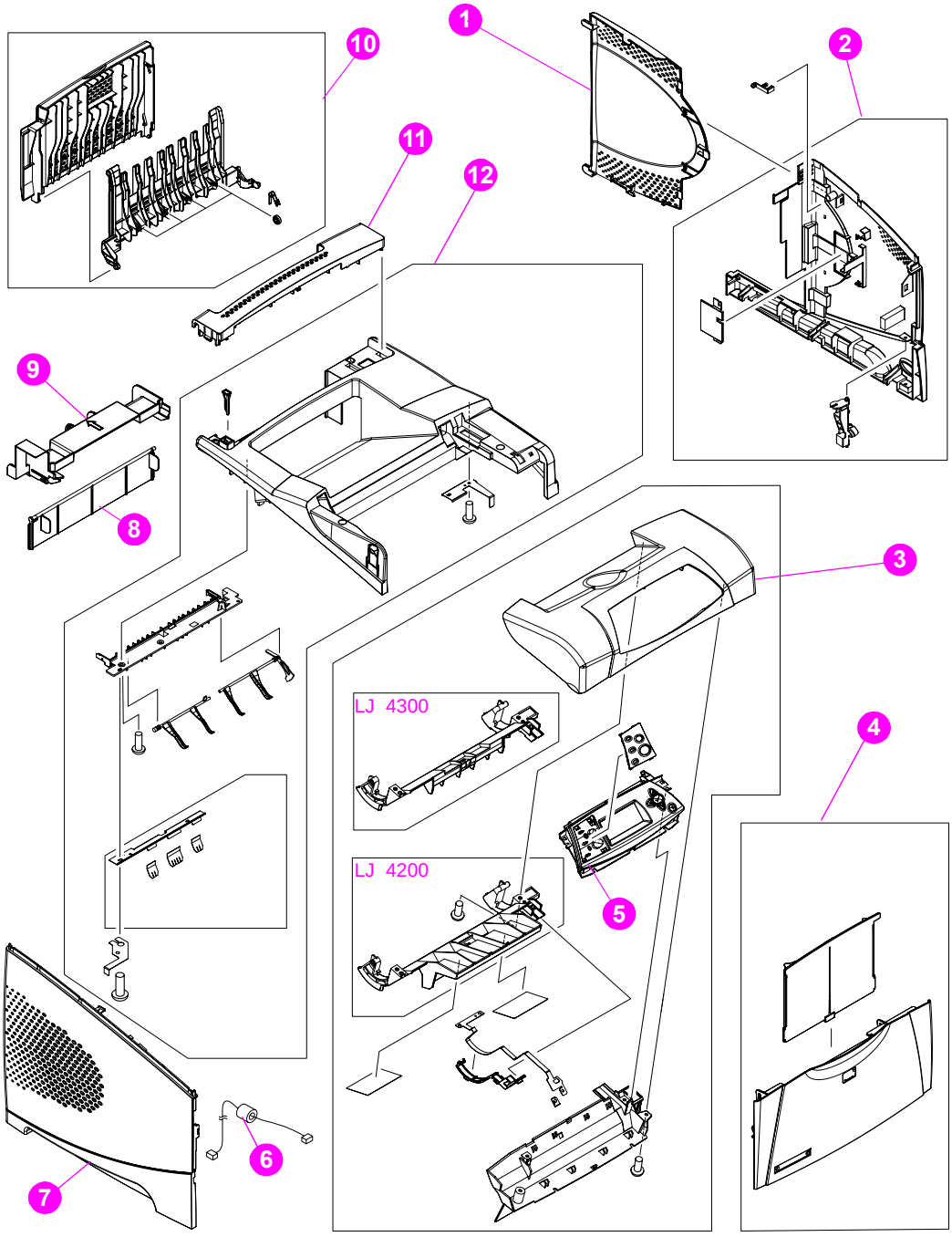

Figure 237. **External covers and panels**

Download Free Service Manual at http://printer1.blogspot.com

Table 87. External covers and panels

Part number	Description	Reference
RC1-0288-000CN	Cover, formatter	1; figure 237
RM1-0046-000CN	Cover, right	2; figure 237
RM1-0047-000CN	Cover, cartridge door; LJ 4200	3; figure 237
RM1-0114-000CN	Cover, cartridge door; LJ 4300	3; figure 237
RM1-0050-000CN	Cover, front (be sure to order the correct name plate kit to install on the front cover)	4; figure 237
Q2425-67901	LJ4200 name plate kit	Not shown
Q2431-67908	LJ4300 name plate kit	Not shown
RG1-4276-000CN	Control panel	5; figure 237
RG1-4215-000CN	Cable, control panel	6; figure 237
RC1-0287-000CN	Cover, left	7; figure 237
RC1-0290-000CN	Cover; 500-sheet tray, rear	8; figure 237
RC1-0291-000CN	Cover, duplexer	9; figure 237
RM1-0027-000CN	Cover, rear output bin	10; figure 237
RC1-0289-000CN	Cover, paper-handling	11; figure 237
RM1-0049-000CN	Cover, top assembly	12; figure 237

Download Free Service Manual at http://printer1.blogspot.com

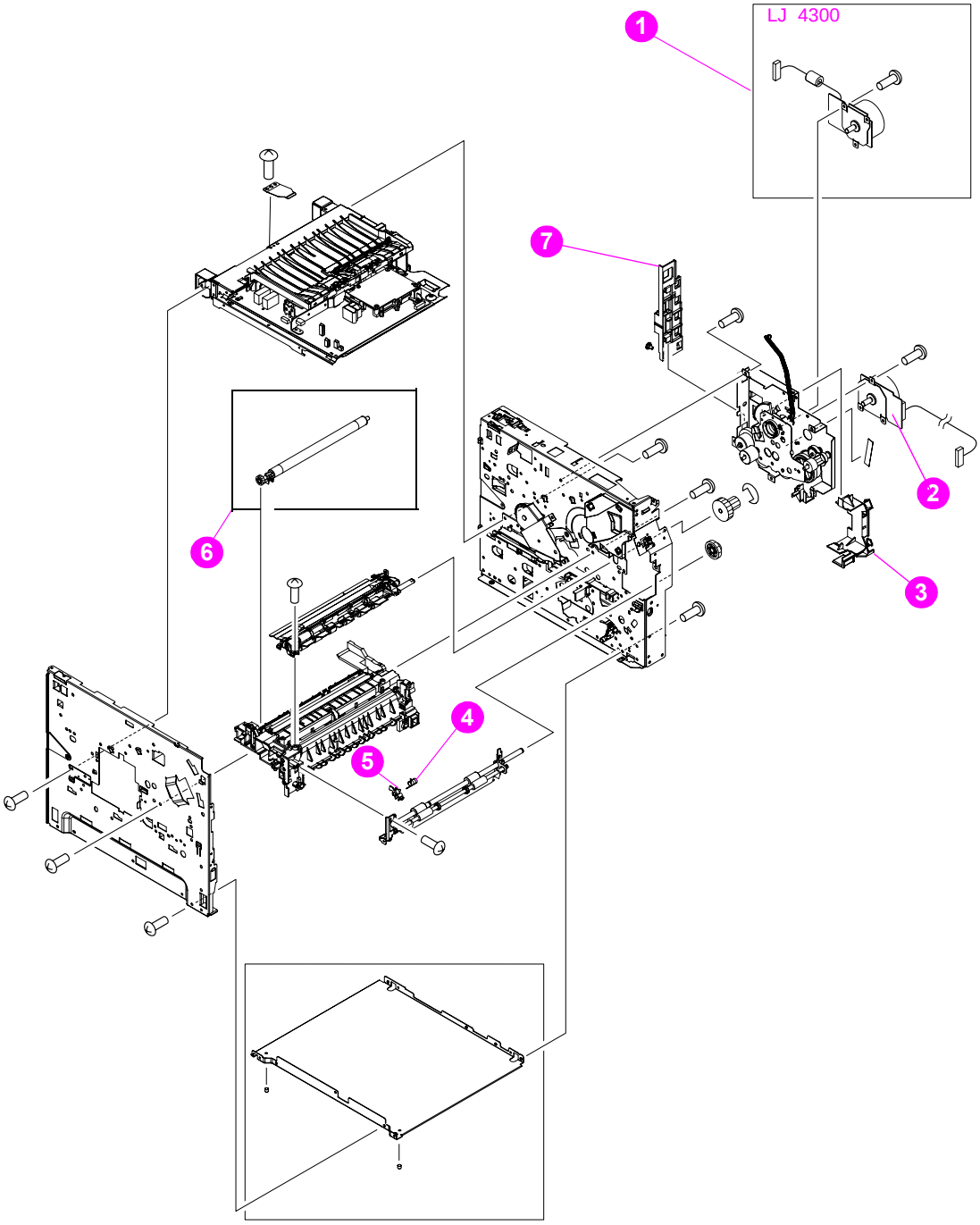

Figure 238. **Main assemblies (1 of 3)**

Download Free Service Manual at http://printer1.blogspot.com

Table 88. Main assemblies (1 of 3)

Part number	Description	Reference
RH7-1576-000CN	Motor, print cartridge (LJ 4300 only)	1; figure 238
RH1-1570-000CN	Motor, main (LJ4200/4300)	2; figure 238
RC1-0270-000CN	Guide, cable DC controller	3; figure 238
RC1-0061-000CN	Spring, torsion	4; figure 238
RC1-0060-000CN	Flag, paper-feed sensor	5; figure 238
RC1-0044-000CN	Roller, transfer	6; figure 238
RC1-0269-000CN	Guide, cable DC controller	7; figure 238

Download Free Service Manual at http://printer1.blogspot.com

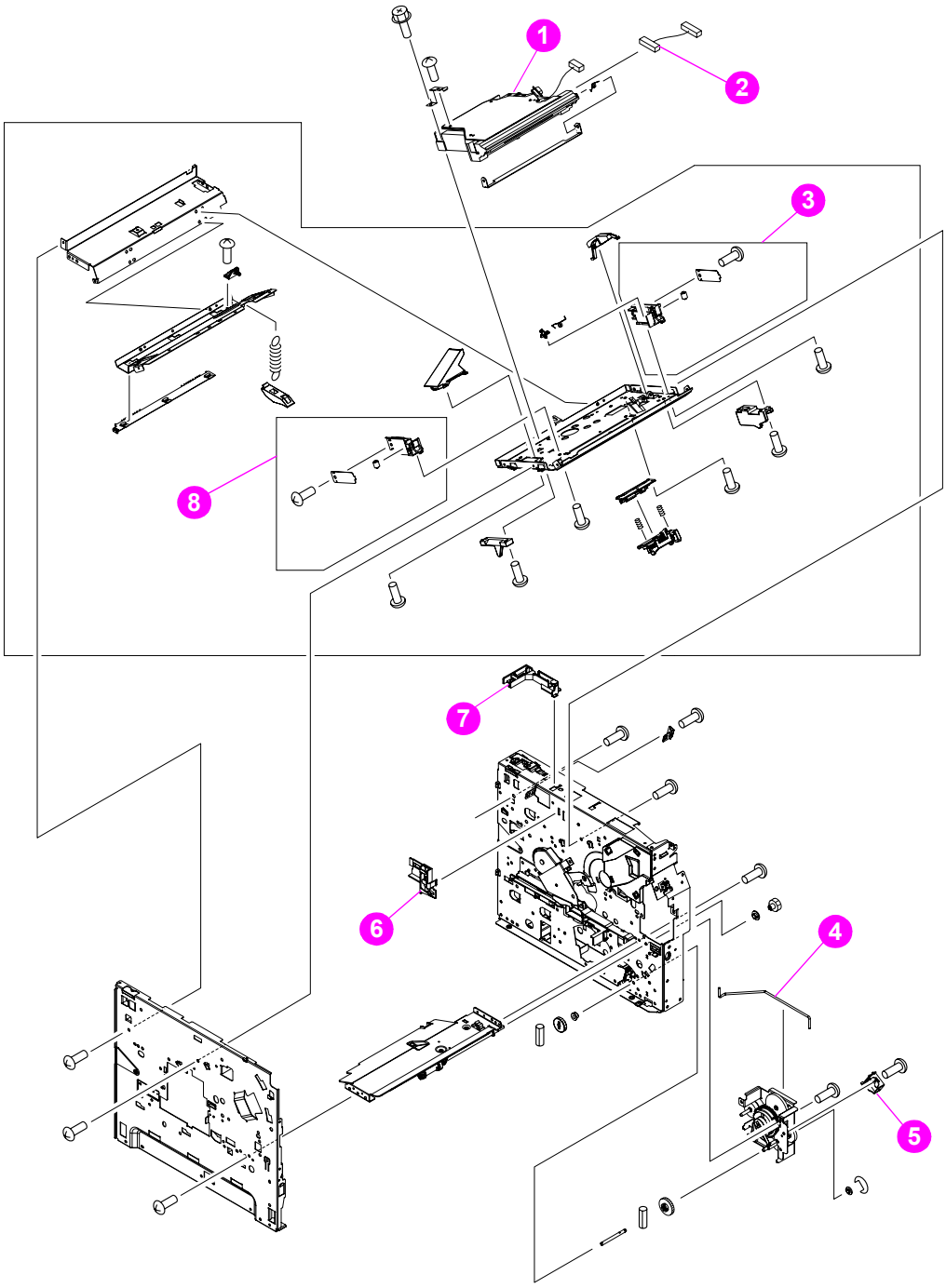

Figure 239. **Main assemblies (2 of 3)**

Download Free Service Manual at http://printer1.blogspot.com

Table 89. Main assemblies (2 of 3)

Part number	Description	Reference
Q2425-69001 (exchange) RM1-0173-000CN (new)	Laser/scanner assembly (LJ 4200)	1; figure 239
Q2431-690001 (exchange) RM1-0183-000CN (new)	Laser/scanner assembly (LJ 4300)	1; figure 239
RG1-4212-000CN	Cable, laser	2; figure 239
RM1-0054-000CN	Brake assembly, right	3; figure 239
RC1-0268-000CN	Switch rod	4; figure 239
RH1-5355-000CN	Solenoid, paper-pickup assembly	5; figure 239
RC1-0340-000CN	Guide, scanner cable 1	6; figure 239
RC1-0385-000CN	Guide, scanner cable 2	7; figure 239
RM1-0053-000CN	Brake assembly, left	8; figure 239

Download Free Service Manual at http://printer1.blogspot.com

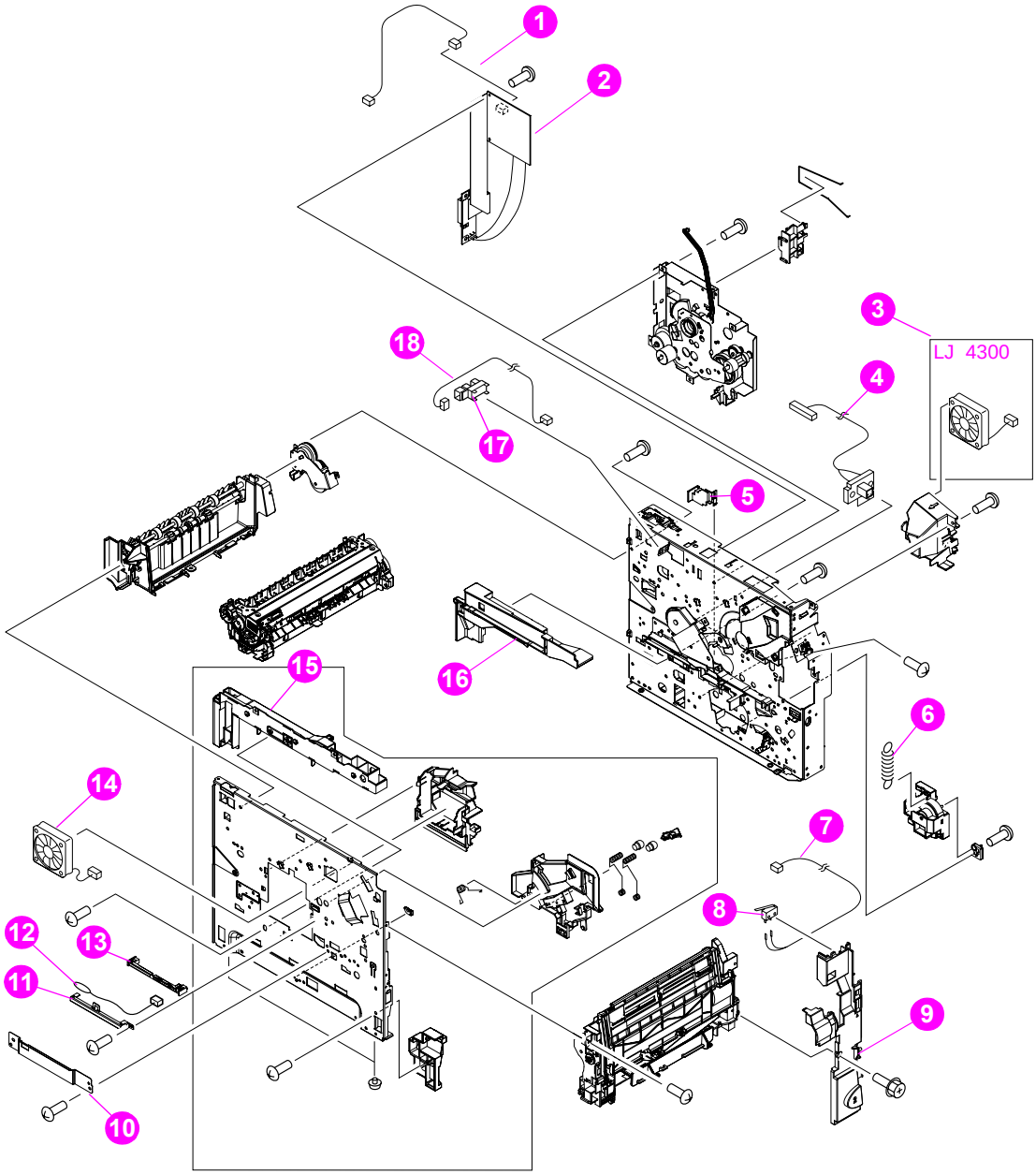

Figure 240. **Main assemblies (3 of 3)**

Download Free Service Manual at http://printer1.blogspot.com

Table 90. Main assemblies (3 of 3)

Part number	Description	Reference
RG1-4219-000CN	Cable, memory	1; figure 240
RG1-4236-000CN	PCA, DC controller (LJ 4200)	2; figure 240
RG1-4237-000CN	PCA, DC controller (LJ 4300)	2; figure 240
RH7-1577-000CN	Fan, cooling right side (LJ 4300 only)	3; figure 240
RG1-4224-000CN	Cable, envelope feeder	4; figure 240
RC1-0386-000CN	Guide, connector cable	5; figure 240
RC1-0198-000CN	Spring, tension (lifter driver assembly)	6; figure 240
RG1-4213-000CN	Cable, top cover	7; figure 240
WC4-5139-000CN	Switch, top cover	8; figure 240
RC1-0019-000CN	Cover, inner front right side	9; figure 240
RC1-0344-000CN	Cover, fan (power supply shield)	10; figure 240
RC1-0343-000CN	Holder, metal thermistor	11; figure 240
RH7-7116-000CN	Thermistor	12; figure 240
RC1-0342-000CN	Holder, plastic thermistor	13; figure 240
RH7-1573-000CN	Fan, cooling left side (LJ 4200/4300)	14; figure 240
RC1-0273-000CN	Guide, tray 2 left side	15; figure 240
RC1-0274-000CN	Guide, tray 2 right side	16; figure 240
WG8-5362-000CN	Sensor, top bin-full	17; figure 240
RG1-4214-000CN	Cable, top bin-full	18; figure 240

Download Free Service Manual at http://printer1.blogspot.com

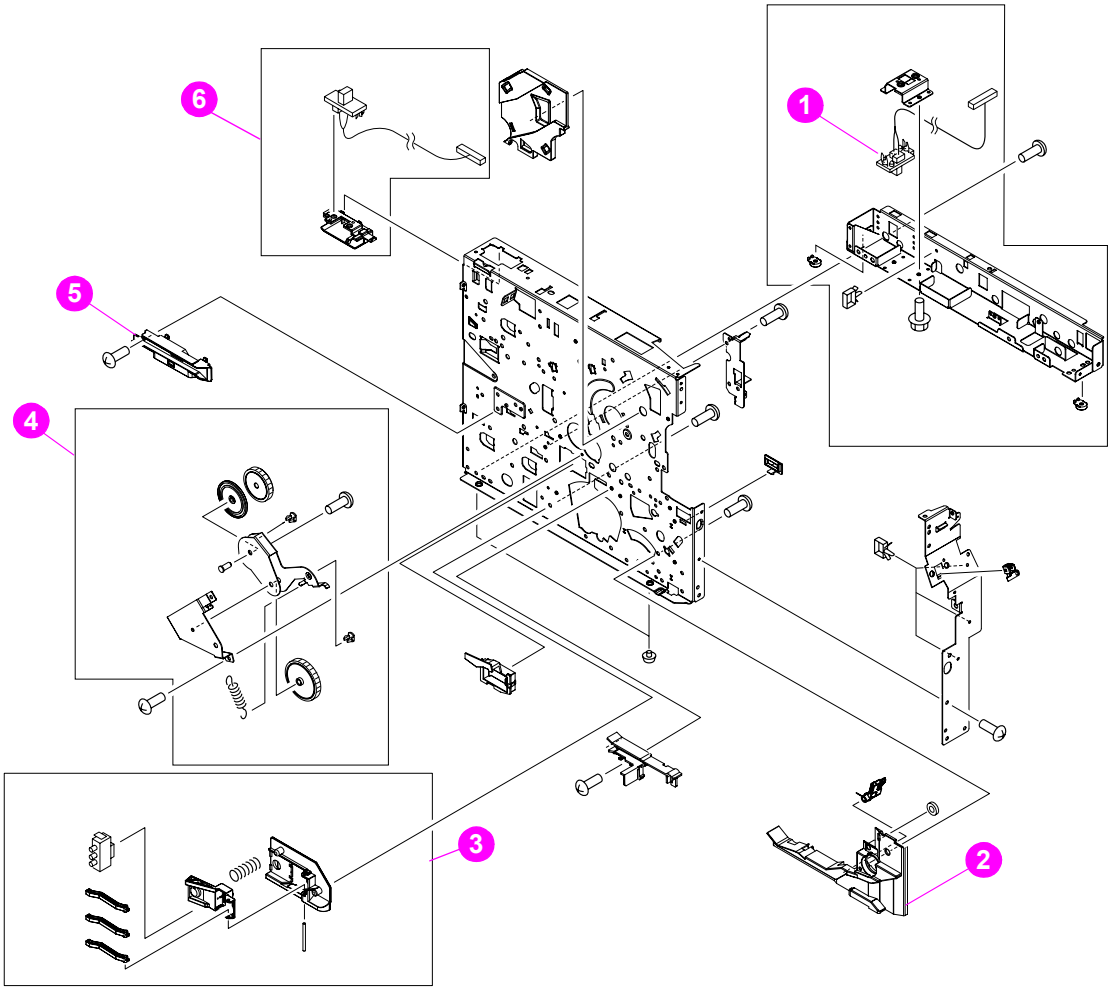

Figure 241. **Right-side assemblies**

Table 91. Right-side assemblies

Part number	Description	Reference
RG1-4223-000CN	Cable, feeder accessory	1; figure 241
RC1-0153-000CN	Guide, cassette	2; figure 241
RM1-0041-000CN	Tray 2 media size sensor assembly	3; figure 241
RM1-0043-000CN	Swing plate assembly	4; figure 241
RC1-0244-000CN	Guide right side power supply	5; figure 241
RM1-0042-000CN	Cable, JetLink accessory	6; figure 241

Download Free Service Manual at http://printer1.blogspot.com

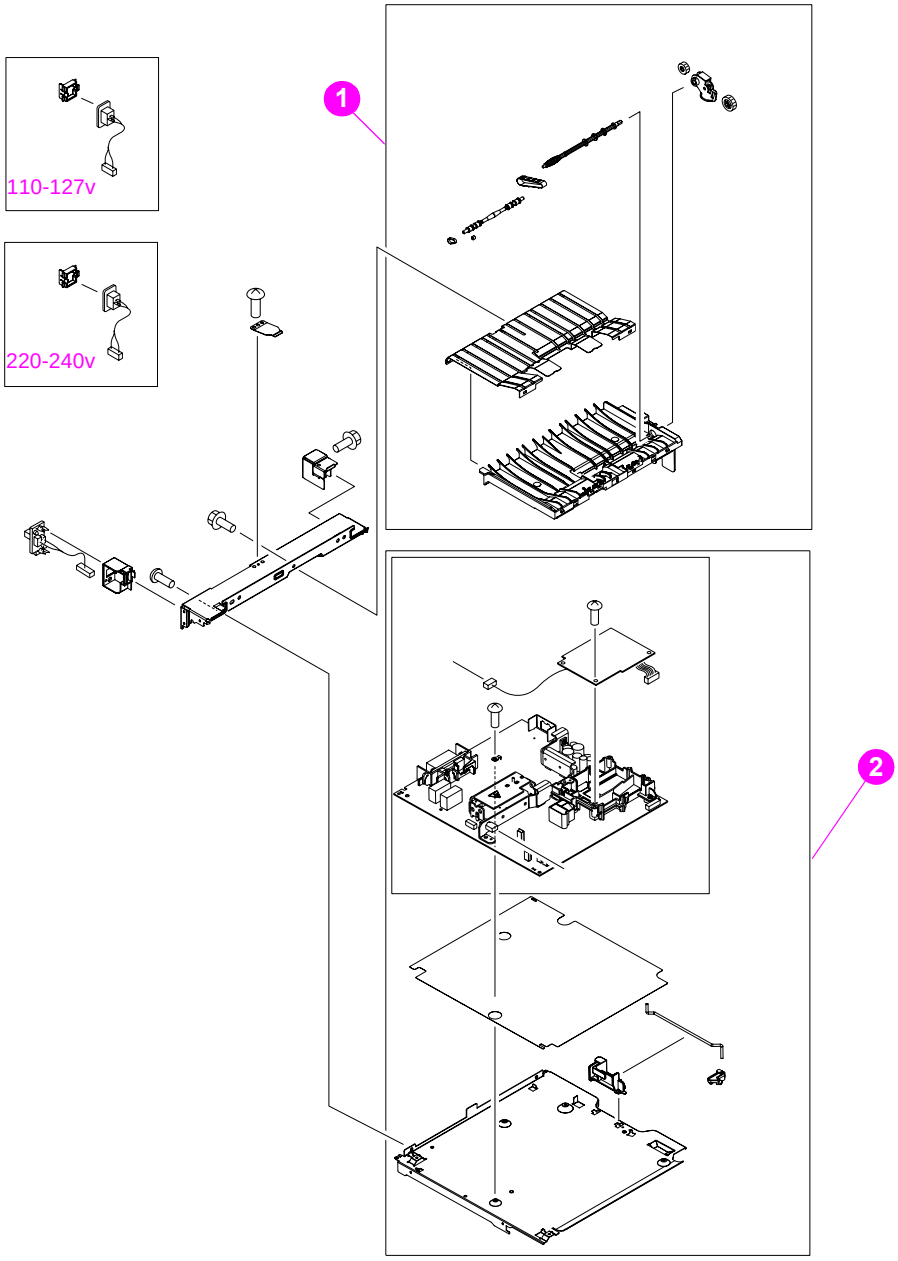

Figure 242. **Power supply and paper feed belt assembly**

Table 92. Power supply and paper-feed belt assembly

Part number	Description	Reference
RM1-0025-000CN	Paper feed belt assembly	1; figure 242
Q2425-69002 (exchange) RM1-0019-000CN (new)	Power supply, 110-V (LJ 4200)	2; figure 242
Q2425-69003 (exchange) RM1-0020-000CN (new)	Power supply, 220-V (LJ 4200)	2; figure 242
Q2431-69002 (exchange) RM1-0107-000CN (new)	Power supply, 110-V (LJ 4300)	2; figure 242
Q2431-69003 (exchange) RM1-0108-000CN (new)	Power supply, 220-V (LJ 4300)	2; figure 242

Download Free Service Manual at http://printer1.blogspot.com

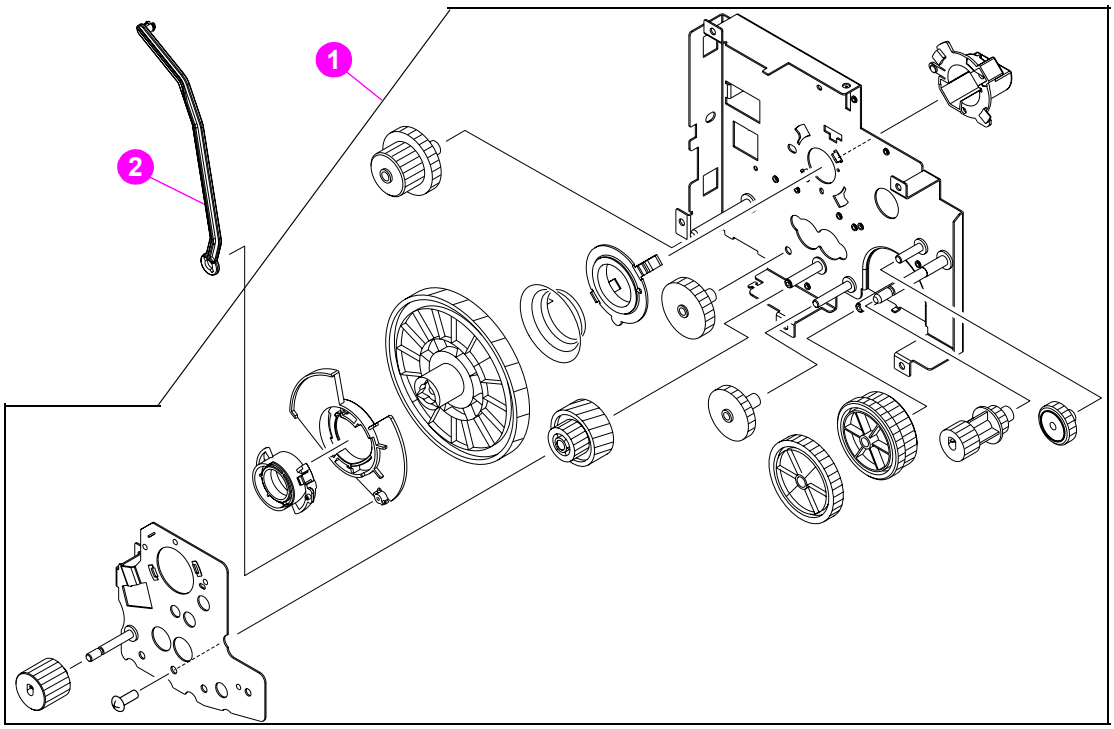

Figure 243. **Main drive assembly**

Table 93. Main drive assembly

Part number	Description	Reference
RM1-0001-000CN	Main drive assembly	1; figure 243
RC1-0003-000CN	Arm, toner cartridge release (print cartridge)	2; figure 243

Download Free Service Manual at http://printer1.blogspot.com

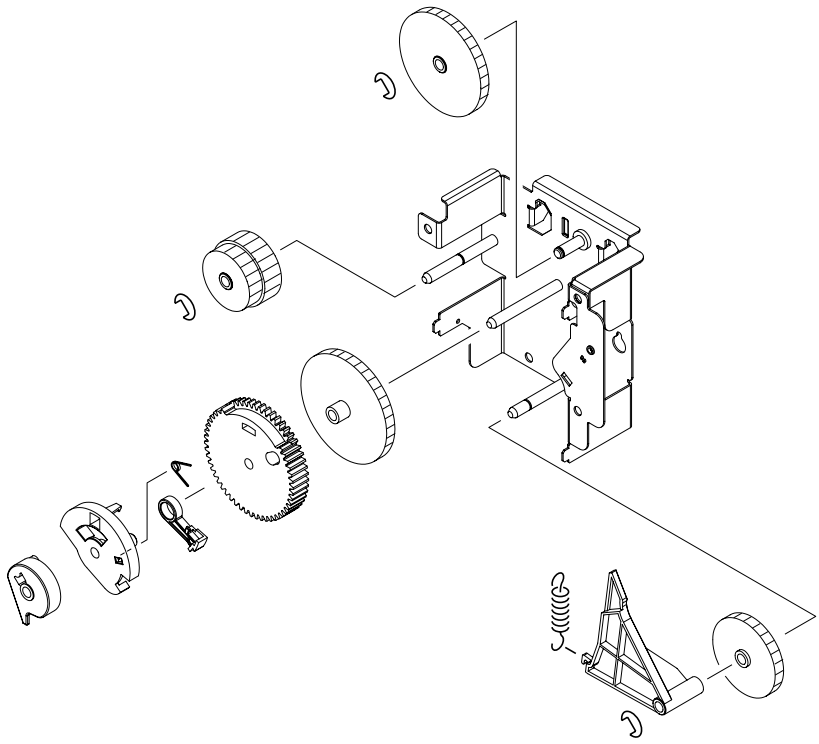

Figure 244. **Paper-pickup assembly**

Table 94. Paper-pickup assembly

Part number	Description	Reference
RM1-0034-000CN	Paper-pickup assembly	figure 244

Download Free Service Manual at http://printer1.blogspot.com

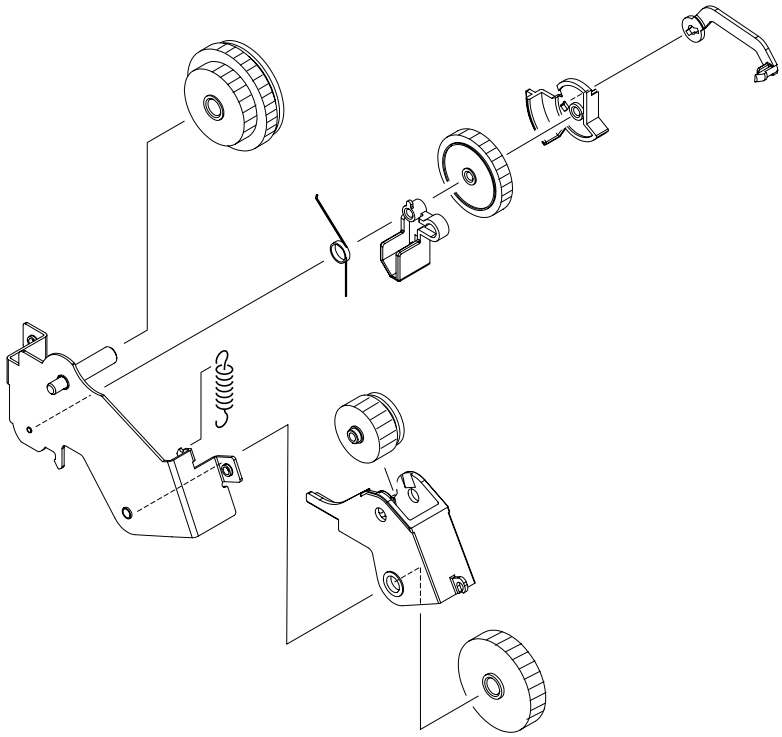

Figure 245. **Duplexing pendulum assembly**

Table 95. Duplexing pendulum assembly

Part number	Description	Reference
RM1-0002-000CN	Duplexing pendulum assembly	figure 245

Download Free Service Manual at http://printer1.blogspot.com

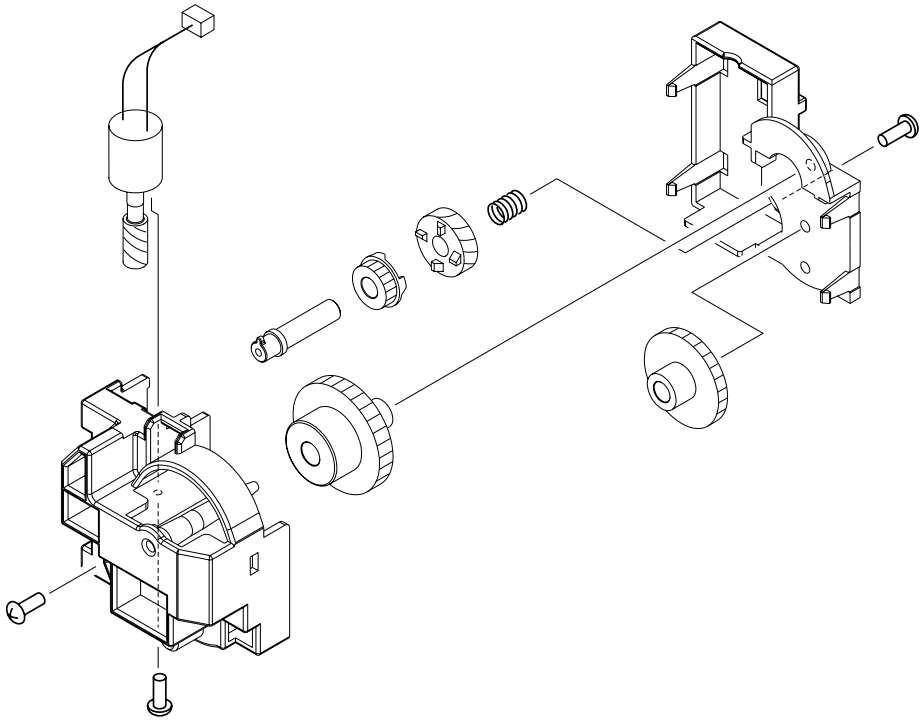

Figure 246. **Tray 2 lifter driver assembly**

Table 96. Tray 2 lifter driver assembly

Part number	Description	Reference
RM1-0033-000CN	Lifter-drive assembly, tray 2	figure 246

Download Free Service Manual at http://printer1.blogspot.com

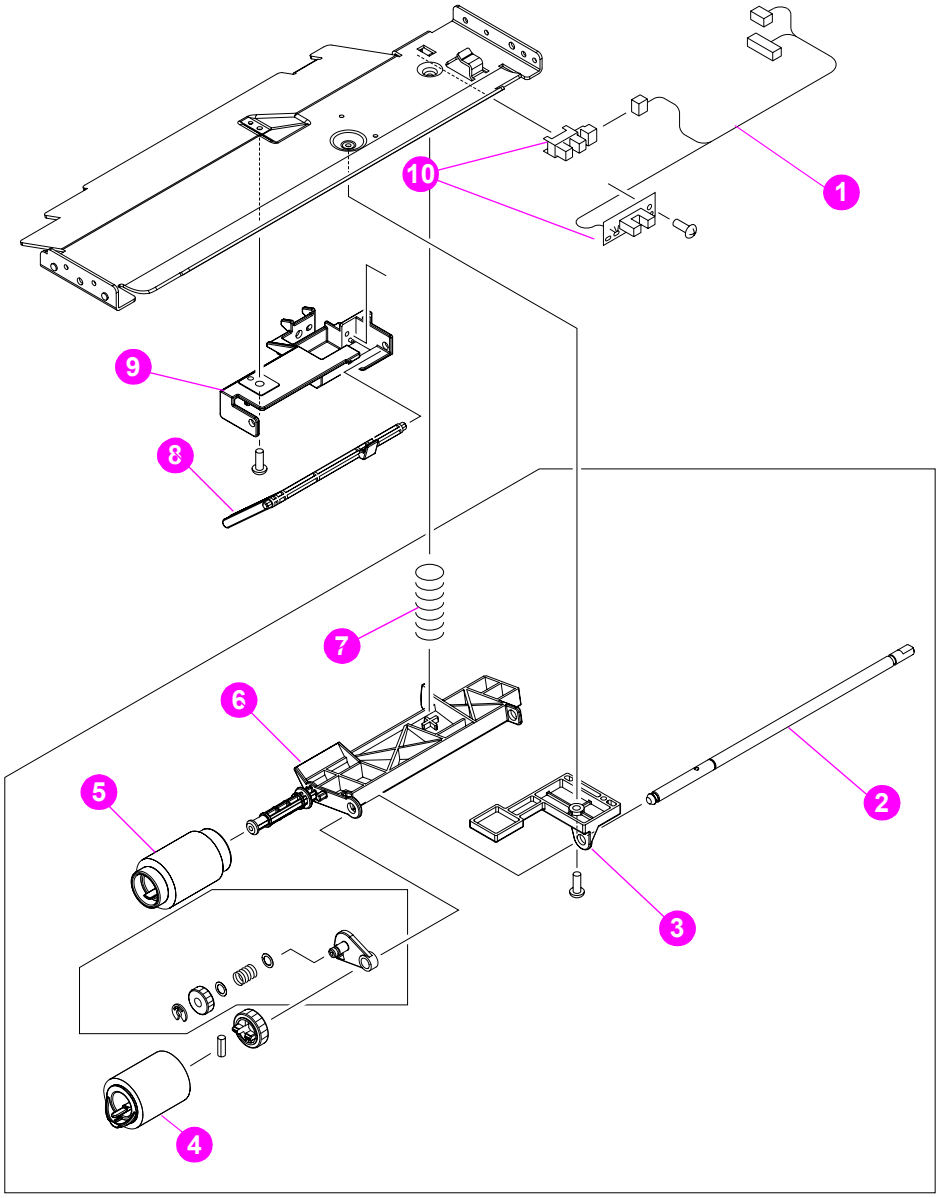

Figure 247. **Paper pickup assembly**

Table 97. Paper pickup assembly

Part number	Description	Reference
RG1-4221-000CN	Paper pickup sensor cable assembly (PS101 & PS107)	1; figure 247
RC1-0210-000CN	Shaft, feeder roller	2; figure 247
RC1-0212-000CN	Holder, paper pickup arm	3; figure 247
RM1-0037-000CN	Roller, paper-feed	4; figure 247
RM1-0036-000CN	Roller, paper-pickup	5; figure 247
RC1-0211-000CN	Arm, paper pickup	6; figure 247
RC1-0213-000CN	Spring, compression	7; figure 247
RC1-0209-000CN	Flag, paper sensing	8; figure 247
RC1-0208-000CN	Holder, paper sensor	9; figure 247
WG8-5362-000CN	Sensor, Tray 2 paper (PS101); paper stack (PS107)	10; figure 247

Download Free Service Manual at http://printer1.blogspot.com

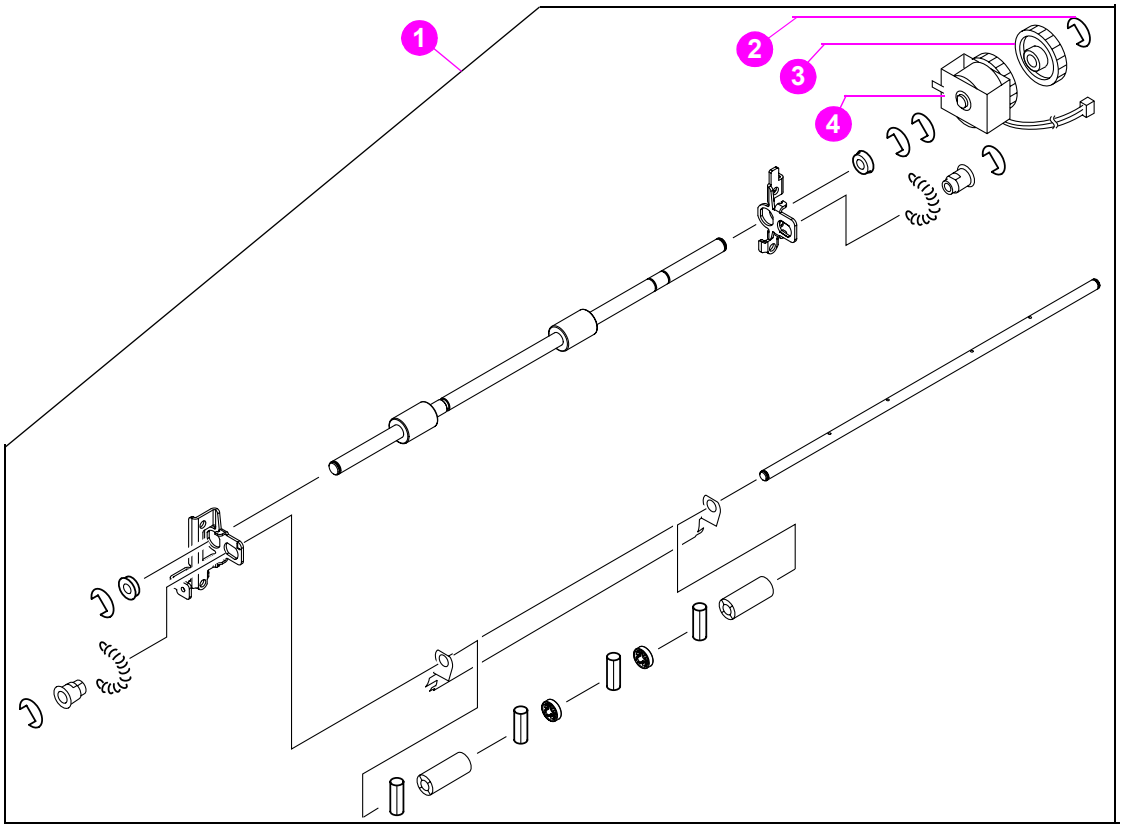

Figure 248. **Paper-feed assembly**

Table 98. Paper-feed assembly

Part number	Description	Reference
RM1-0012-000CN	Paper-feed assembly	1; figure 248
XD9-0137-000CN	Ring, E	2; figure 248
RU5-0050-000CN	Gear, 30T	3; figure 248
RH7-5358-000CN	Clutch, paper-feed assembly	4; figure 248

Download Free Service Manual at http://printer1.blogspot.com

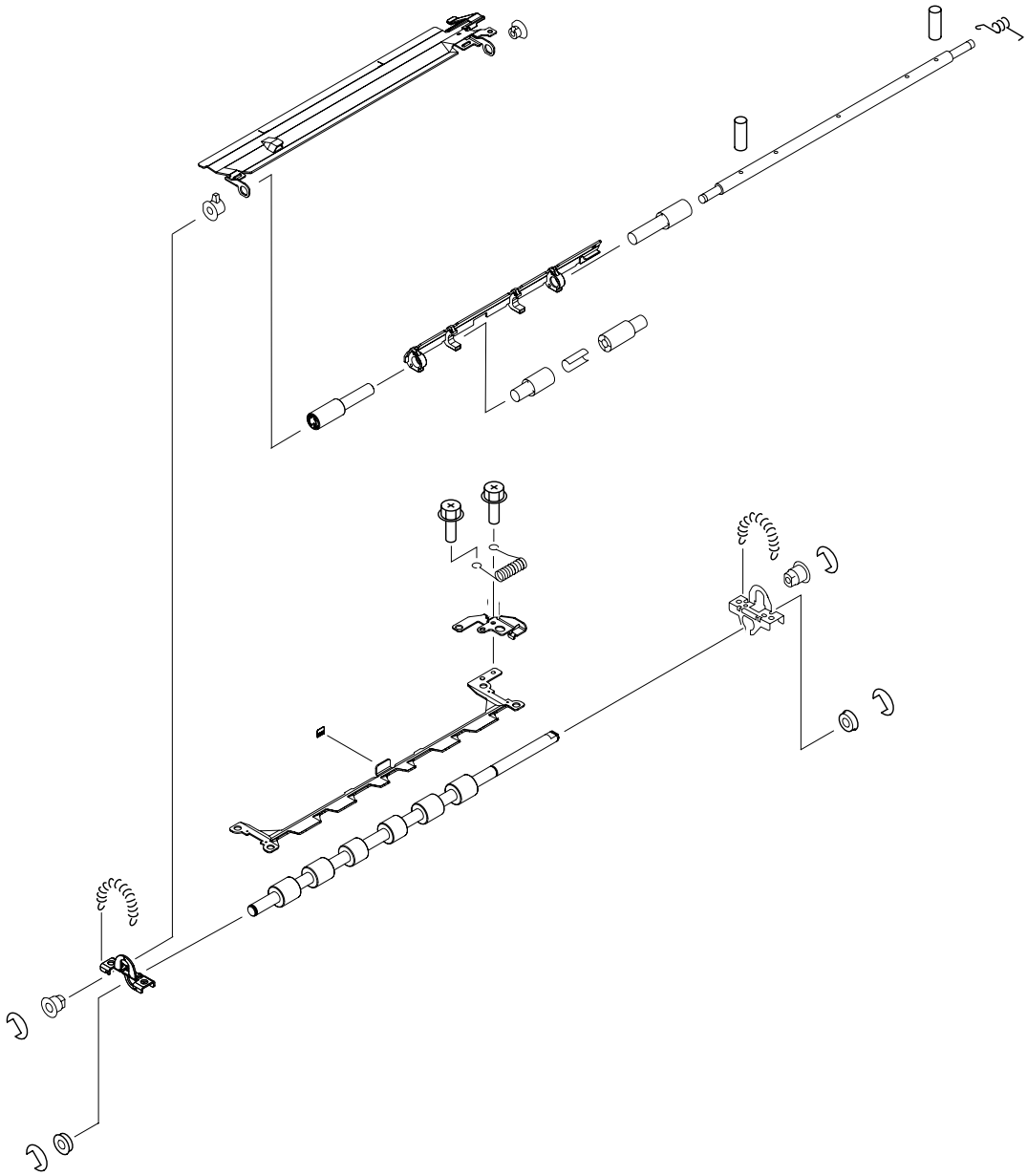

Figure 249. **Registration assembly**

Table 99. Registration assembly

Part number	Description	Reference
RM1-0011-000CN	Registration assembly	figure 249

Download Free Service Manual at http://printer1.blogspot.com

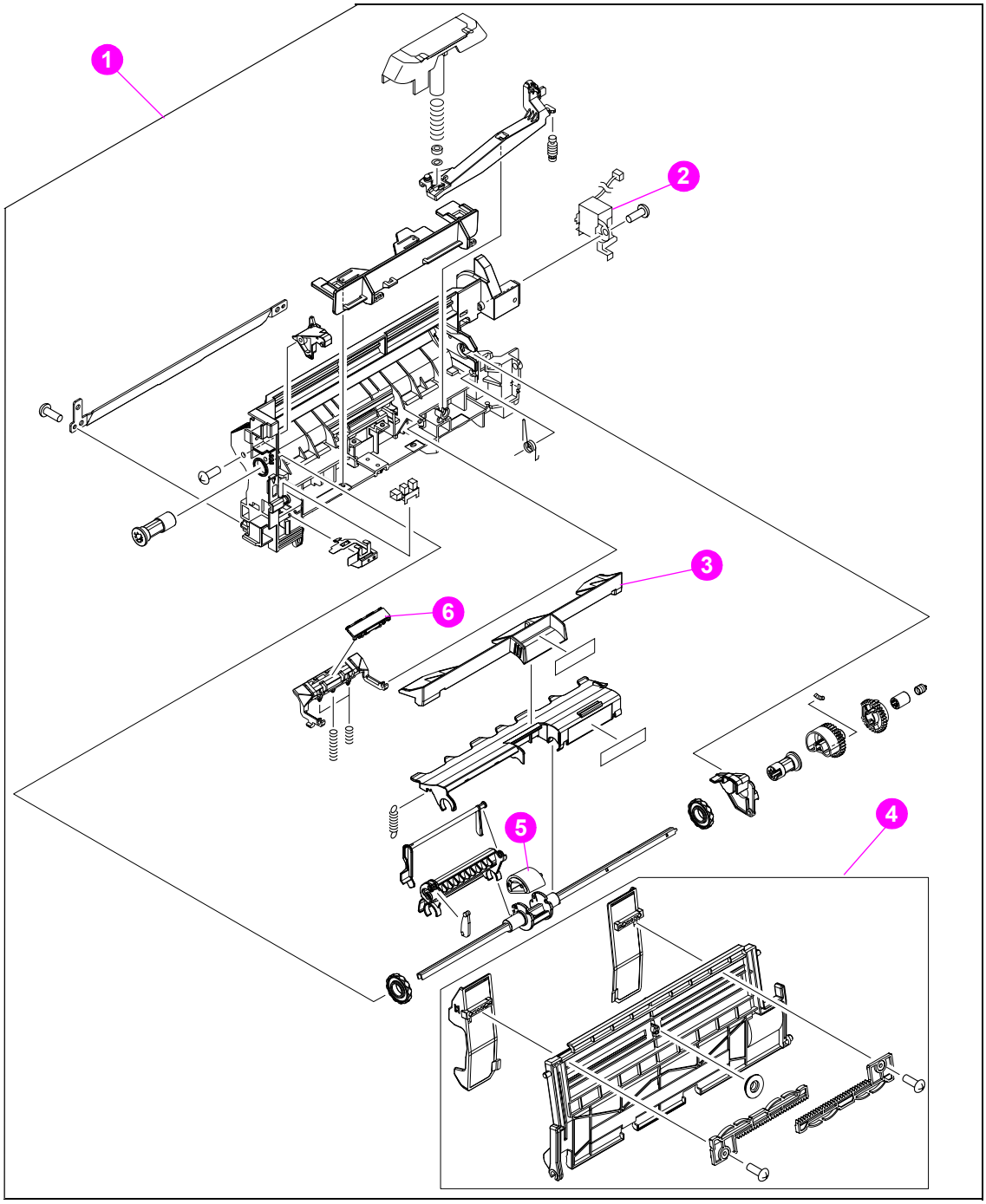

Figure 250. **Tray 1 assembly**

Table 100. Tray 1 assembly

Part number	Description	Reference
RM1-0004-000CN	Tray 1 pickup assembly	1; figure 250
RH7-5357-000CN	Solenoid, tray 1 pickup	2; figure 250
RC1-0320-000CN	Cover, envelope feeder	3; figure 250
RM1-0005-000CN	Tray 1	4; figure 250
RL1-0019-000CN	Roller tray 1 pickup	5; figure 250
RL1-0007-000CN	Separation pad, tray 1	6; figure 250

Download Free Service Manual at http://printer1.blogspot.com

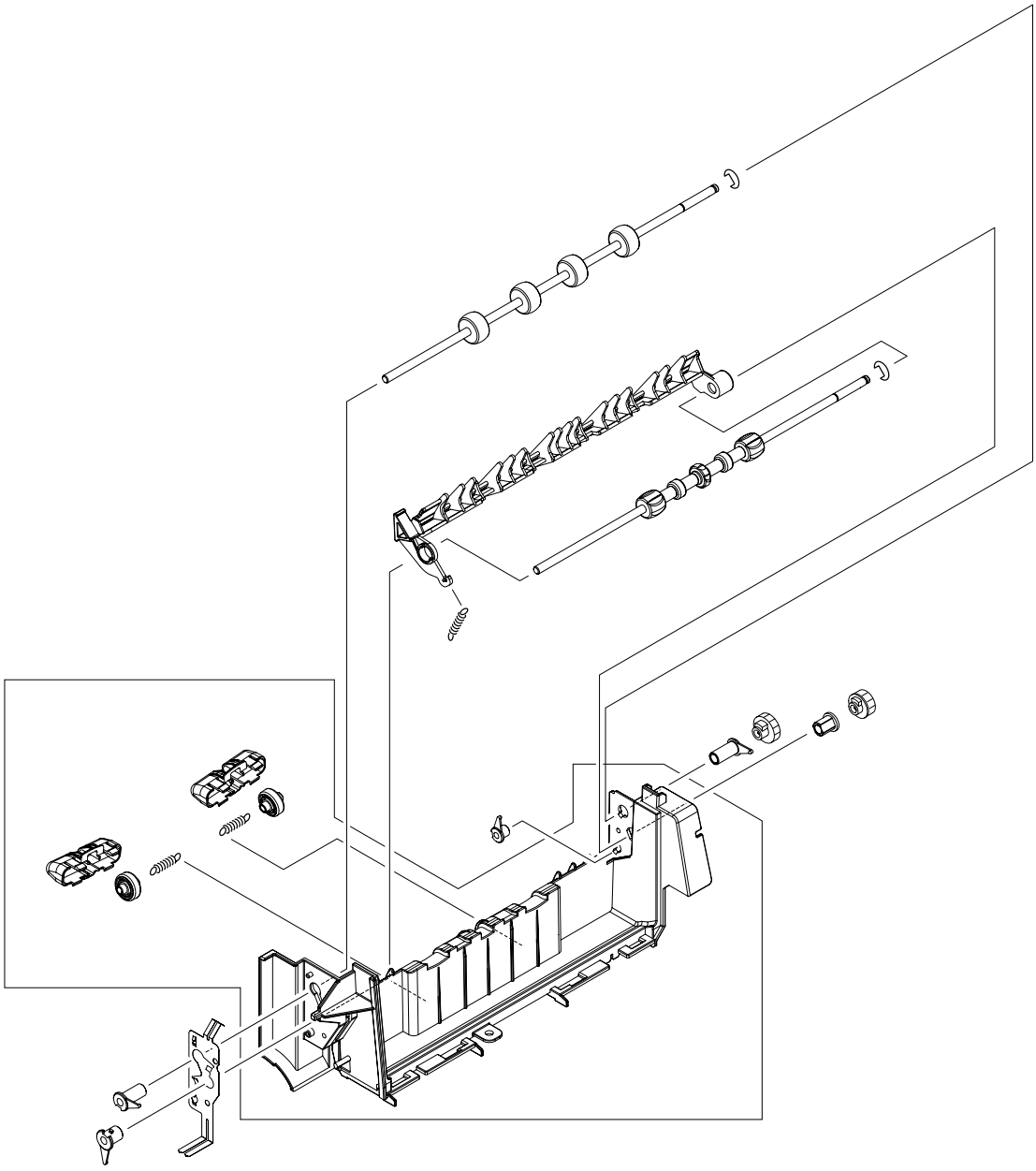

Figure 251. **Output delivery assembly**

Table 101. Output delivery assembly

Part number	Description	Reference
RM1-0026-000CN	Output delivery assembly	figure 251

Download Free Service Manual at http://printer1.blogspot.com

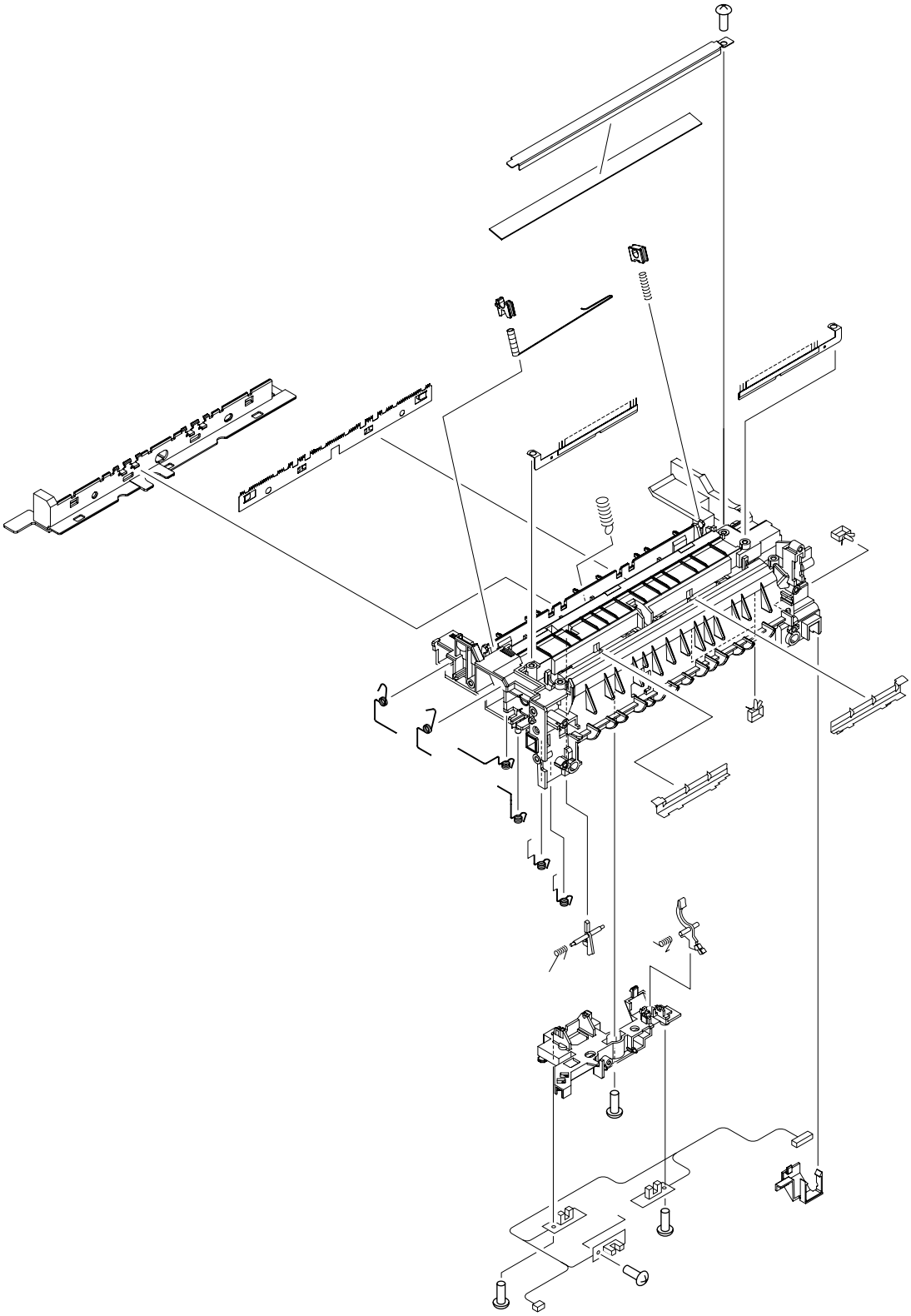

Figure 252. **Transfer assembly**

Table 102. Transfer assembly

Part number	Description	Reference
RM1-0007-000CN	Transfer assembly	figure 252

Download Free Service Manual at http://printer1.blogspot.com

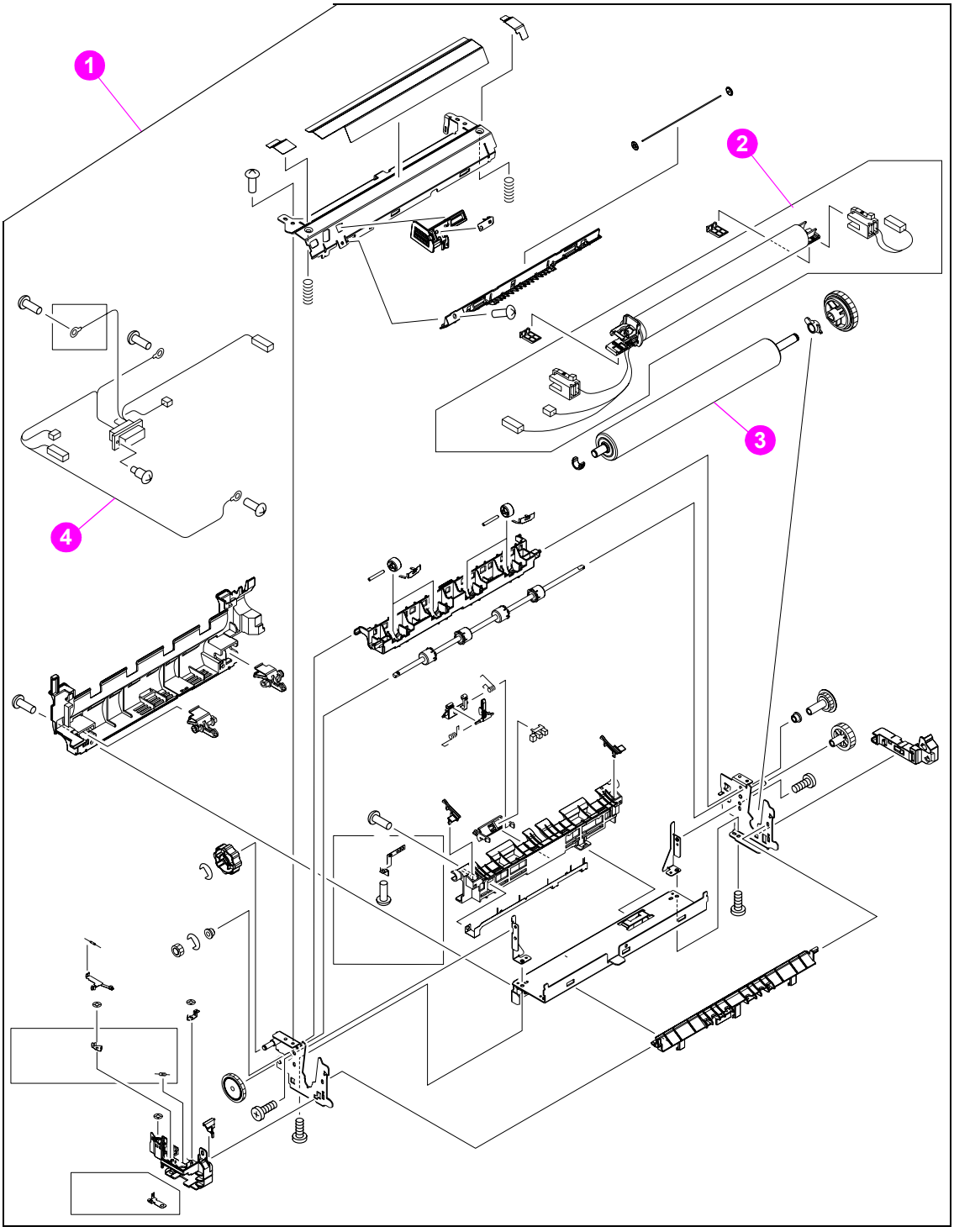

Figure 253. **Fuser**

Download Free Service Manual at http://printer1.blogspot.com

Table 103. Fuser

Part number	Description	Reference
Q2425-69004 (exchange) RM1-0013-000CN (new)	Fuser, 110-V (LJ 4200)	1; figure 253
Q2425-69005 (exchange) RM1-0014-000CN (new)	Fuser, 220-V (LJ 4200)	1; figure 253
Q2431-69005 (exchange) RM1-0101-000CN (new)	Fuser, 110-V (LJ 4300)	1; figure 253
Q2431-69006 (exchange) RM1-0102-000CN (new)	Fuser, 220-V (LJ 4300)	1; figure 253
RM1-0015-000CN	Fixing film, 110-V (LJ 4200)	2; figure 253
RM1-0016-000CN	Fixing film, 220-V (LJ 4200)	2; figure 253
RM1-0103-000CN	Fixing film, 110-V (LJ 4300)	2; figure 253
RM1-0104-000CN	Fixing film, 220-V (LJ 4300)	2; figure 253
RC1-0070-000CN	Roller, fixing pressure	3; figure 253
RG1-4205-000CN	Cable, fuser (LJ 4200)	4; figure 253
RG1-4231-000CN	Cable, fuser (LJ 4300)	4; figure 253

Download Free Service Manual at http://printer1.blogspot.com

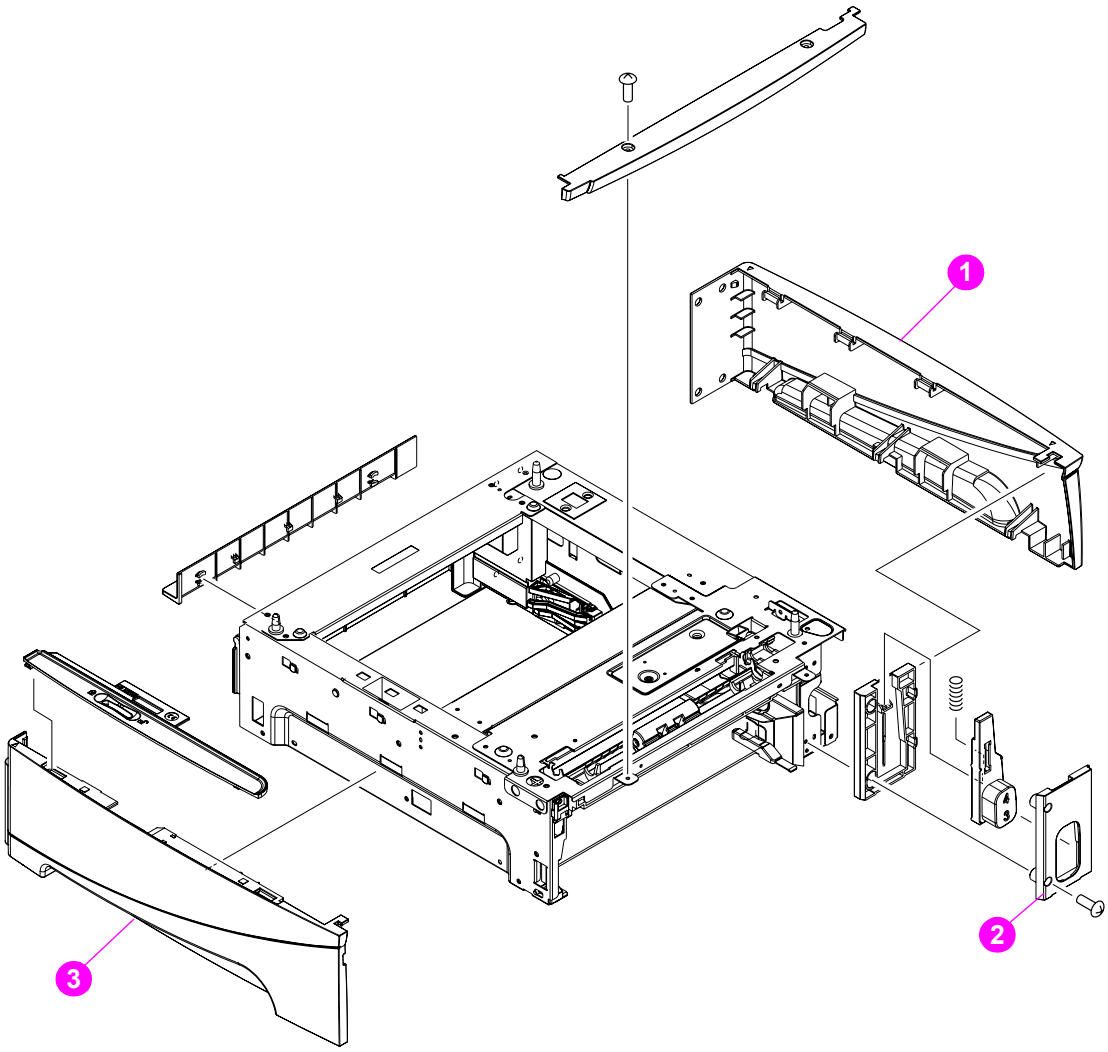

Figure 254. **500-sheet feeder external covers and panels**

Table 104. 500-sheet feeder external covers and panels

Part number	Description	Reference
RC1-0488-000CN	Cover, right; 500-sheet feeder	1; figure 254
RC1-0500-000CN	Cover, number display panel; 500-sheet feeder	2; figure 254
RC1-0487-000CN	Cover, left; 500-sheet feeder	3; figure 254

Download Free Service Manual at http://printer1.blogspot.com

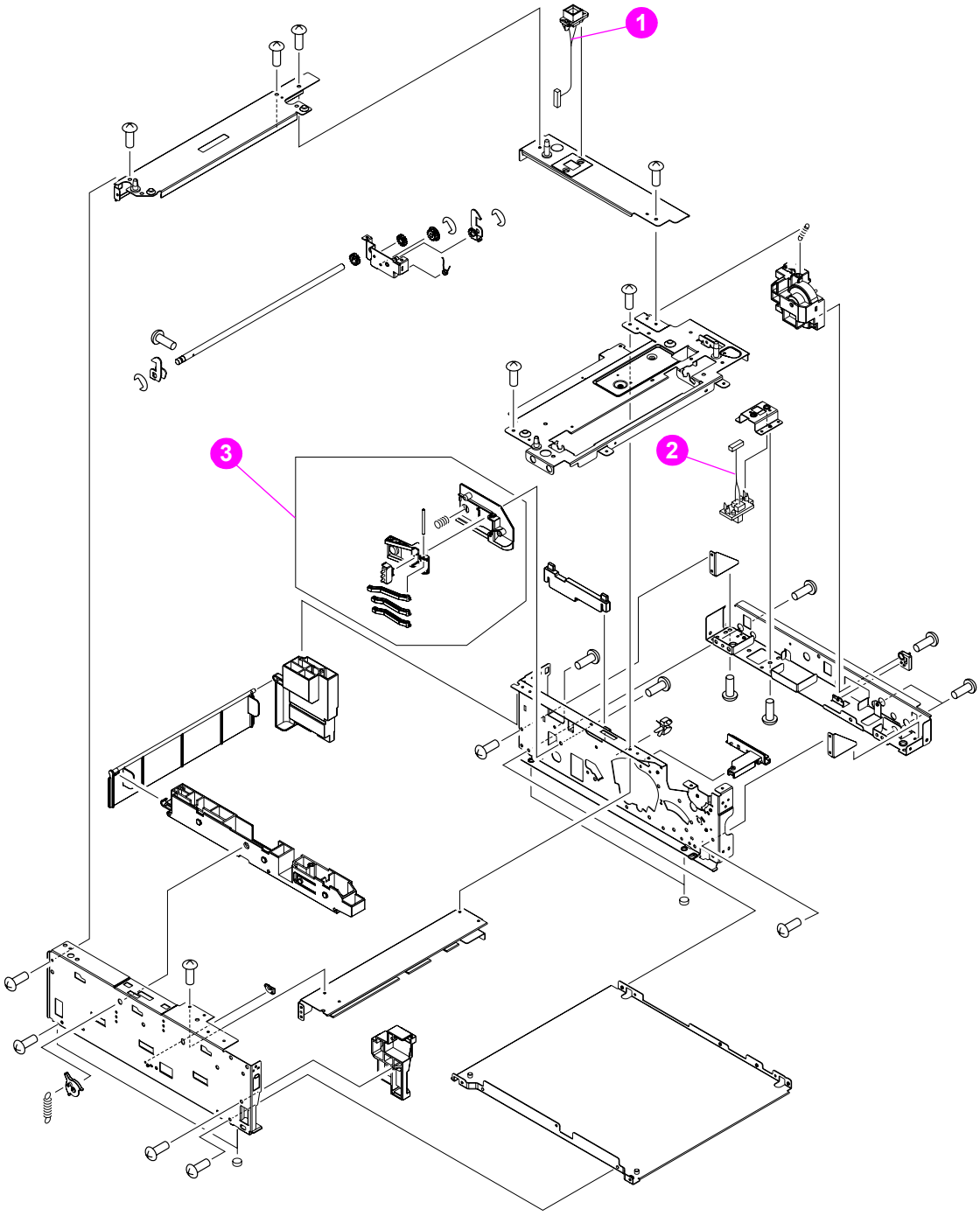

Figure 255. **500-sheet feeder main assemblies (1 of 2)**

Table 105. 500-sheet feeder main assemblies (1 of 2)

Part number	Description	Reference
RG1-4201-000CN	Cable, interface upper	1; figure 255
RG1-4202-000CN	Cable, interface lower	2; figure 255
RM1-0041-000CN	Media size sensor assembly; 500-sheet feeder	3; figure 255

Download Free Service Manual at http://printer1.blogspot.com

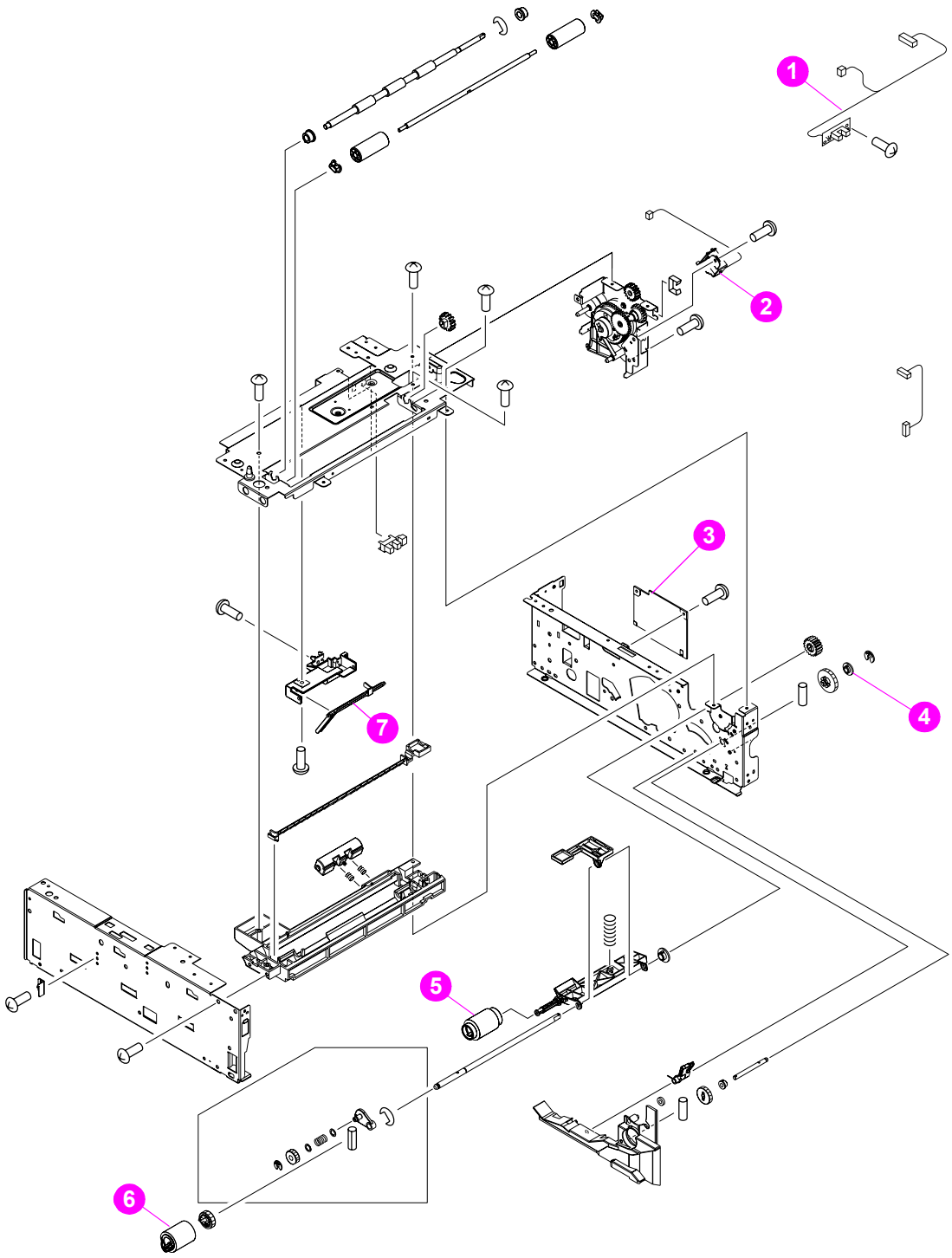

Figure 256. **500-sheet feeder main assemblies (2 of 2)**

Download Free Service Manual at http://printer1.blogspot.com

Table 106. 500-sheet feeder main assemblies (2 of 2)

Part number	Description	Reference
RG1-4250-000CN	Cable, sensor assembly	1; figure 256
RH7-5355-000CN	Solenoid, 500-sheet feeder	2; figure 256
RG1-4200-000CN	PCA, 500-sheet feeder control	3; figure 256
RC1-0206-000CN	Bushing, 500-sheet feeder	4; figure 256
RM1-0036-000CN	Roller, paper pickup; 500-sheet feeder	5; figure 256
RM1-0037-000CN	Roller, paper feed; 500-sheet feeder	6; figure 256
RC1-0209-000CN	Flag, paper sensing	7; figure 256

Download Free Service Manual at http://printer1.blogspot.com

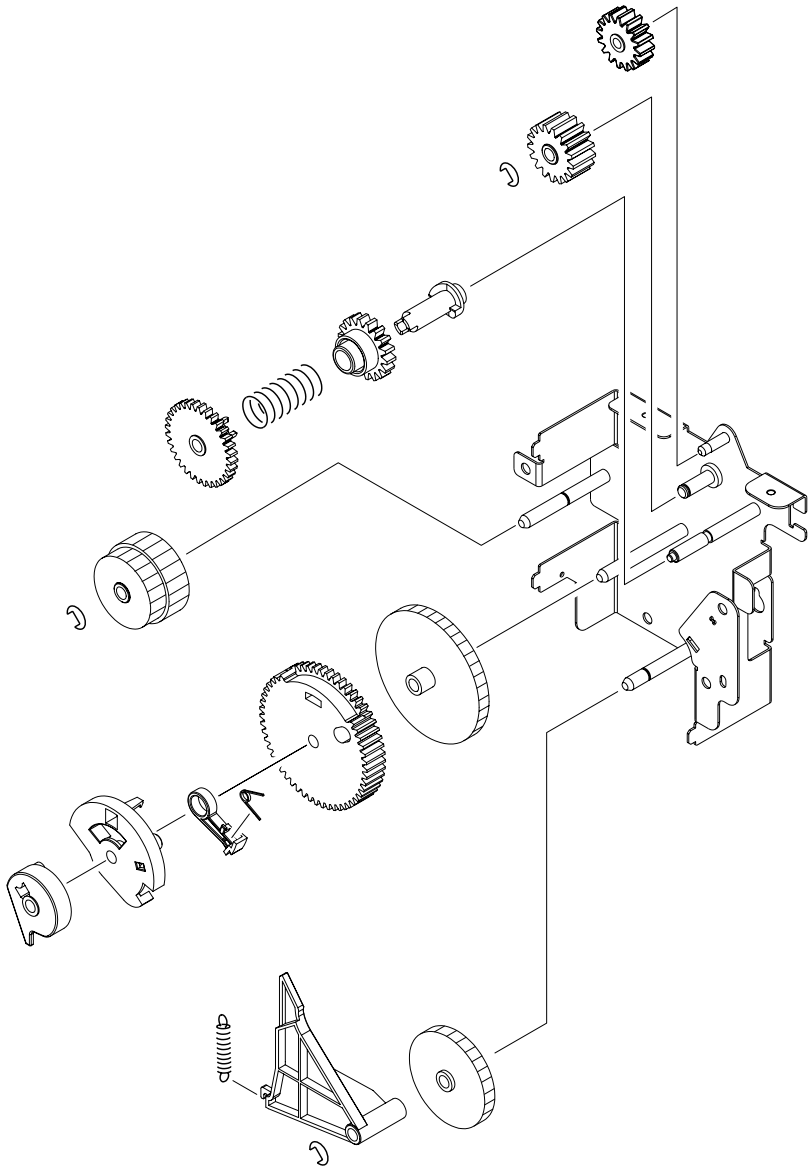

Figure 257. **500-sheet feeder paper-pickup drive assembly**

Table 107. 500-sheet feeder paper-pickup drive assembly

Part number	Description	Reference
RM1-0056-000CN	Paper-pickup assembly; 500-sheet feeder	figure 257

Download Free Service Manual at http://printer1.blogspot.com

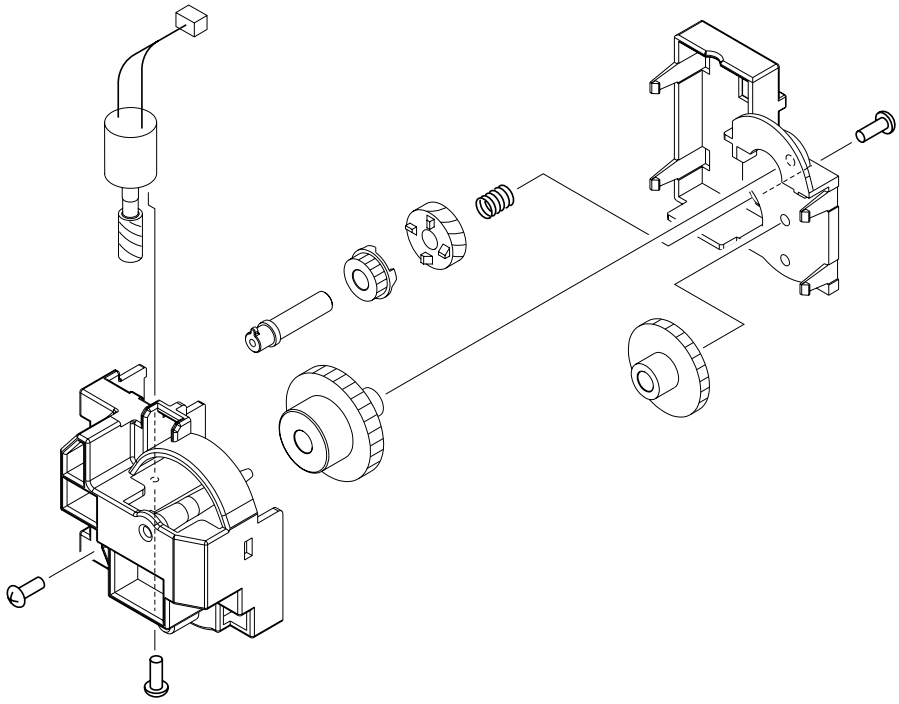

Figure 258. **500-sheet feeder lifter driver assembly**

Table 108. 500-sheet feeder lifter driver assembly

Part number	Description	Reference
RM1-0208-000CN	Lifter-driver assembly; 500-sheet feeder	figure 258

Download Free Service Manual at http://printer1.blogspot.com

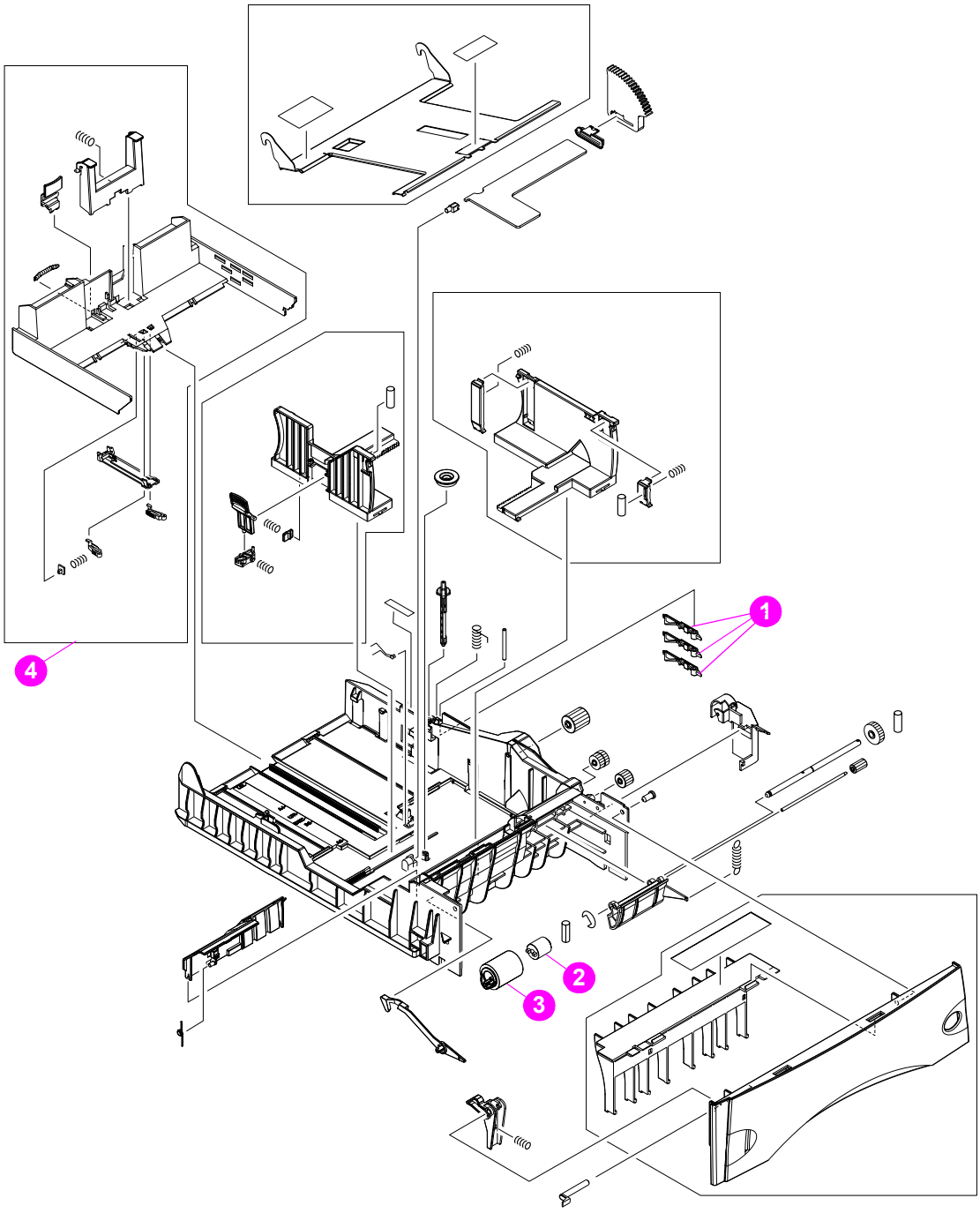

Figure 259. **500-sheet tray**

Table 109. 500-sheet tray

Part number	Description	Reference
RC1-0161-000CN	Flag, paper size sensor; 500-sheet feeder	1; figure 259
RC1-0335-000CN	Torque limiter, 500-sheet feeder	2; figure 259
RM1-0037-000CN	Roller, separation; 500-sheet tray	3; figure 259
RM1-0030-000CN	Rear tray assembly; 500-sheet tray	4; figure 259

Download Free Service Manual at http://printer1.blogspot.com

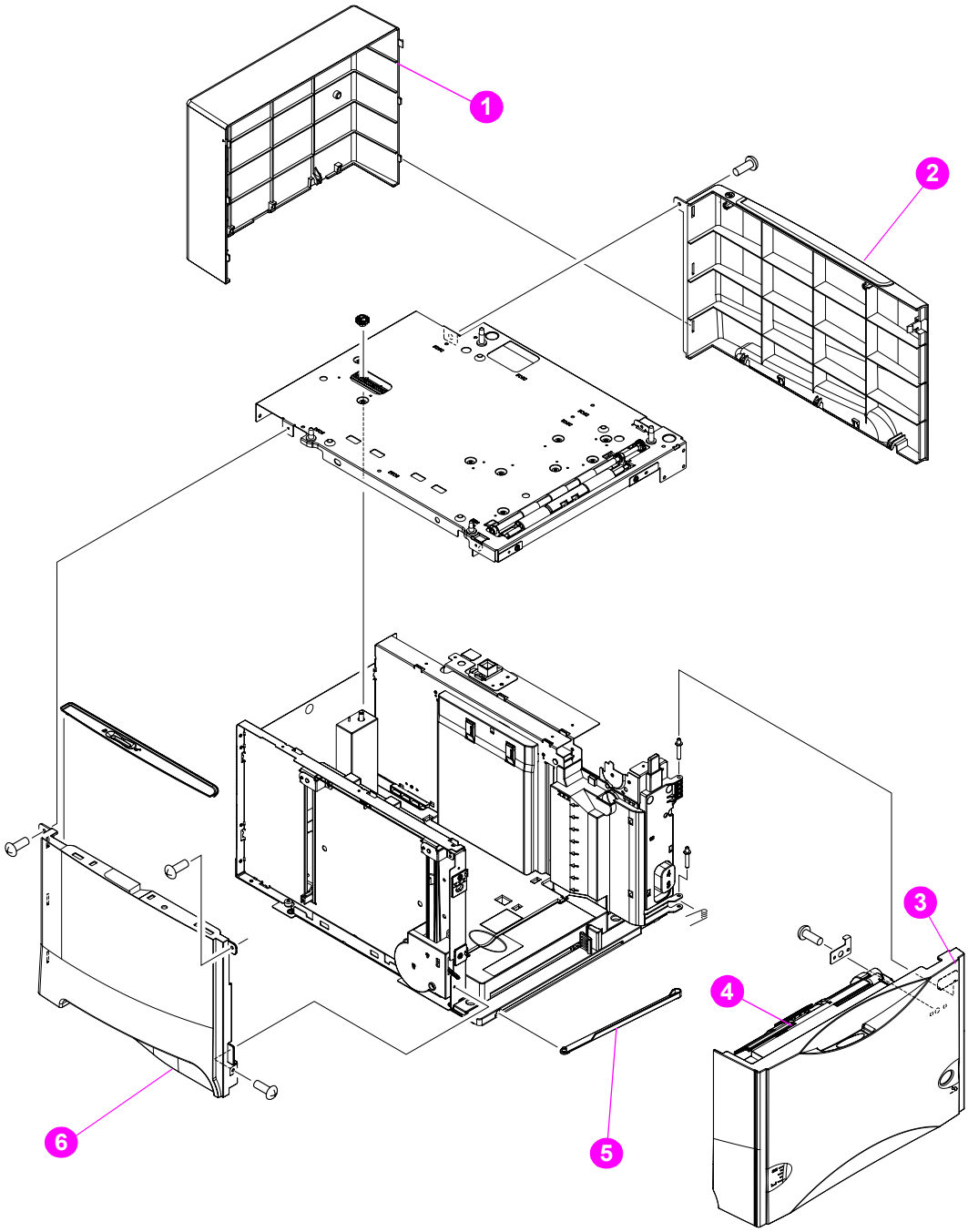

Figure 260. **1500-sheet feeder external covers and panels**

Table 110. 1500-sheet feeder external covers and panels

Part number	Description	Reference
RC1-0663-000CN	Cover, rear; 1,500-sheet feeder	1; figure 260
RC1-0661-000CN	Cover, right; 1,500-sheet feeder	2; figure 260
RM1-0273-000CN	Cover, front (door assembly); 1,500-sheet feeder	3; figure 260
RM1-0037-000CN	Roller, paper feed; 1,500-sheet feeder	4; figure 260
RC1-0714-000CN	Arm, front cover stop; 1,500-sheet feeder	5; figure 260
RC1-0662-000CN	Cover, left; 1,500-sheet feeder	6; figure 260

Download Free Service Manual at http://printer1.blogspot.com

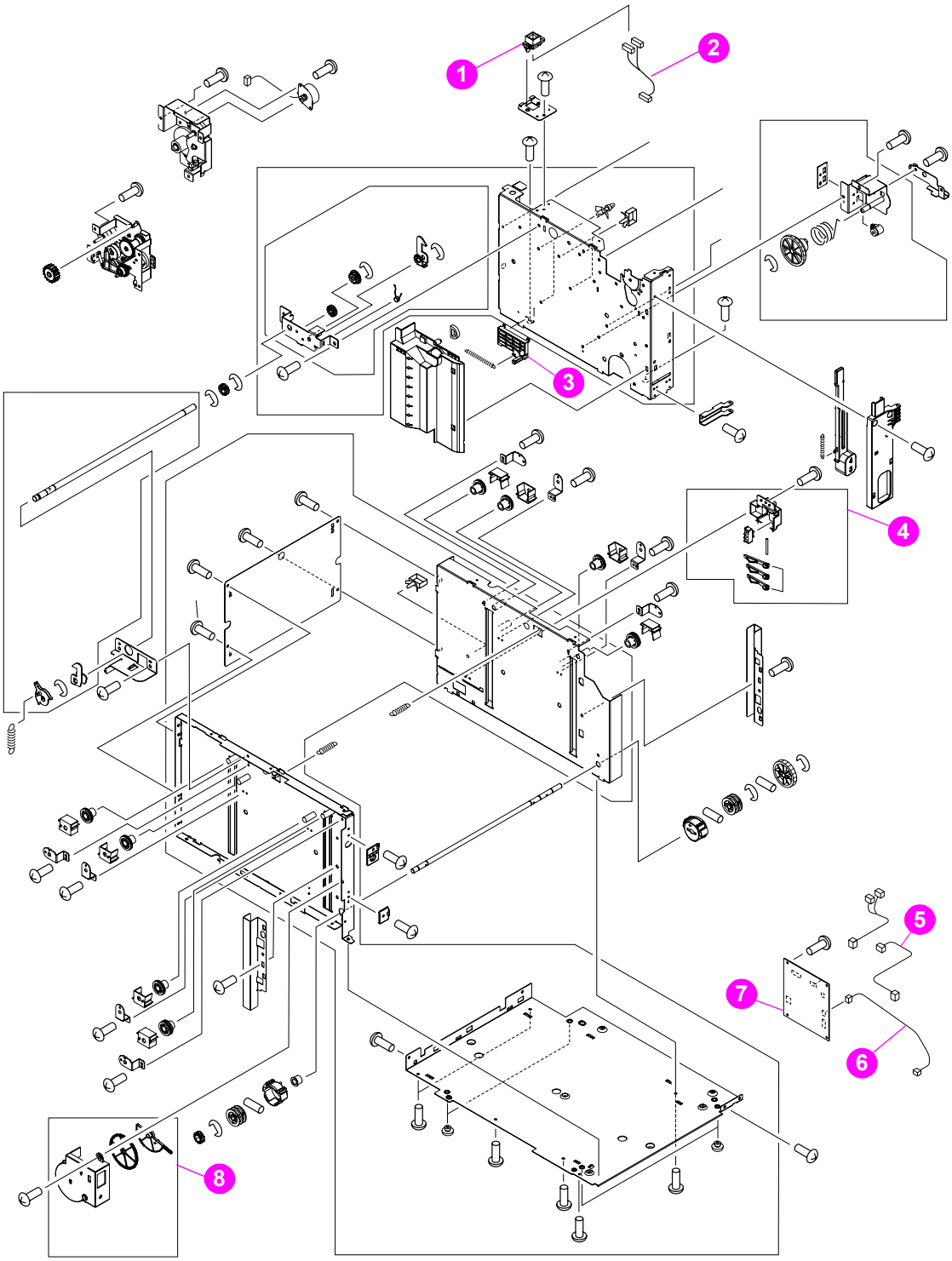

Figure 261. **1,500-sheet feeder main assemblies**

Download Free Service Manual at http://printer1.blogspot.com

Table 111. 1,500-sheet feeder main assemblies

Part number	Description	Reference
VS1-6175-006CN	Connector, interface; 1,500-sheet feeder	1; figure 261
RG1-4239-000CN	Cable, interface; 1,500-sheet feeder	2; figure 261
RC1-0748-000CN	Media size sensor (inside), 1,500-sheet feeder	3; figure 261
RM1-0294-000CN	Paper size sensing assembly (outside), 1,500-sheet feeder	4; figure 261
RG1-4240-000CN	Cable, media size sensor; 1,500-sheet feeder	5; figure 261
RG1-4241-000CN	Cable, door sensor; 1,500-sheet feeder	6; figure 261
RG1-4238-000CN	PCA, 1,500-sheet feeder control	7; figure 261
RM1-0286-000CN	Sensor gear assembly, 1,500-sheet feeder	8; figure 261

Download Free Service Manual at http://printer1.blogspot.com

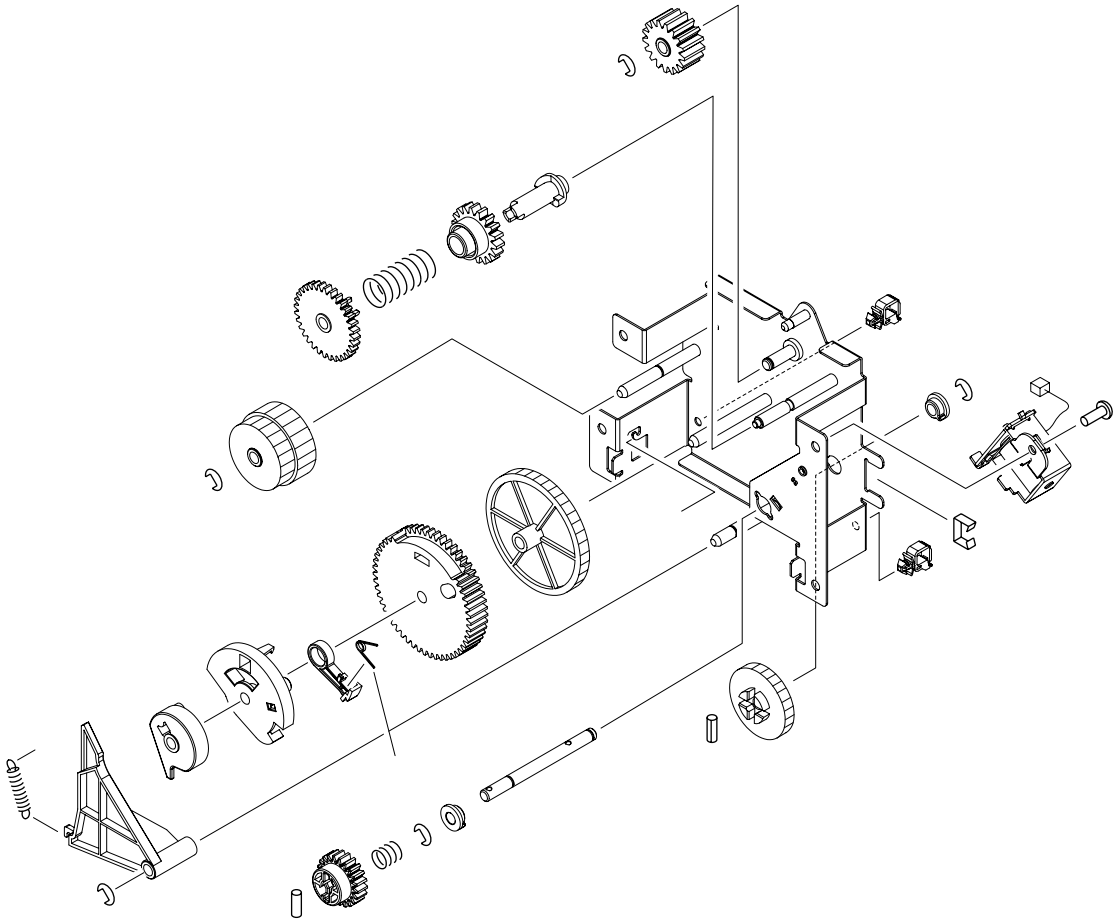

Figure 262. **1,500-sheet feeder paper-pickup drive assembly**

Table 112. 1,500-sheet feeder paper-pickup drive assembly

Part number	Description	Reference
RM1-0283-000CN	Paper-pickup drive assembly, 1,500-sheet feeder	figure 262

Download Free Service Manual at http://printer1.blogspot.com

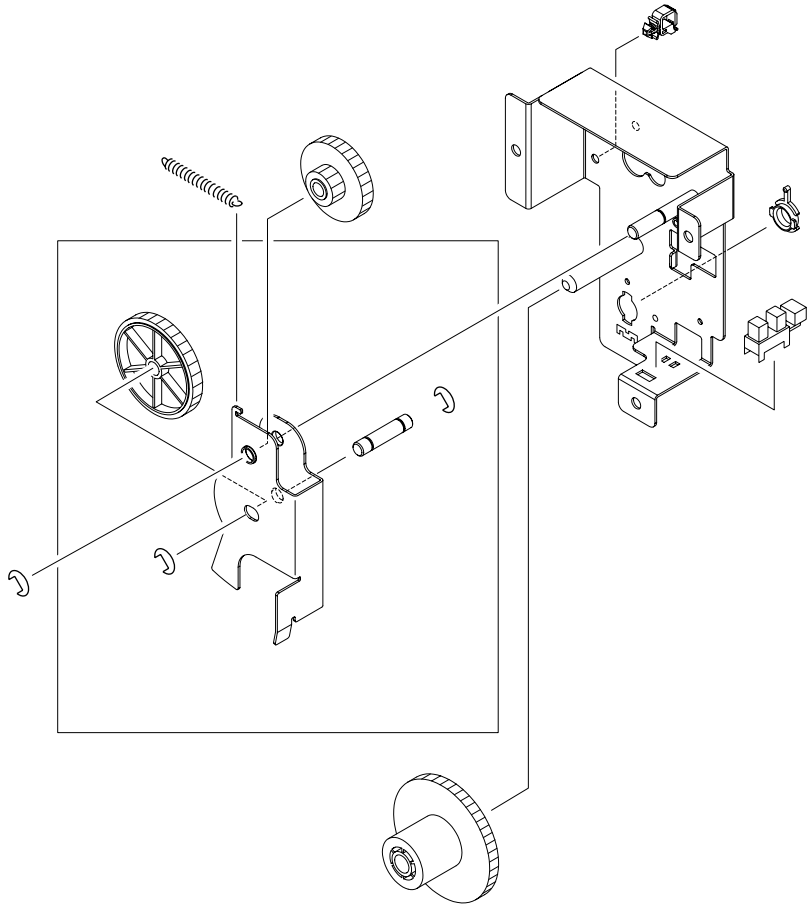

Figure 263. **1,500-sheet feeder lifter-drive assembly**

Table 113. 1,500-sheet feeder lifter-drive assembly

Part number	Description	Reference
RM1-0287-000CN	Lifter-drive assembly, 1,500-sheet feeder	figure 263

Download Free Service Manual at http://printer1.blogspot.com

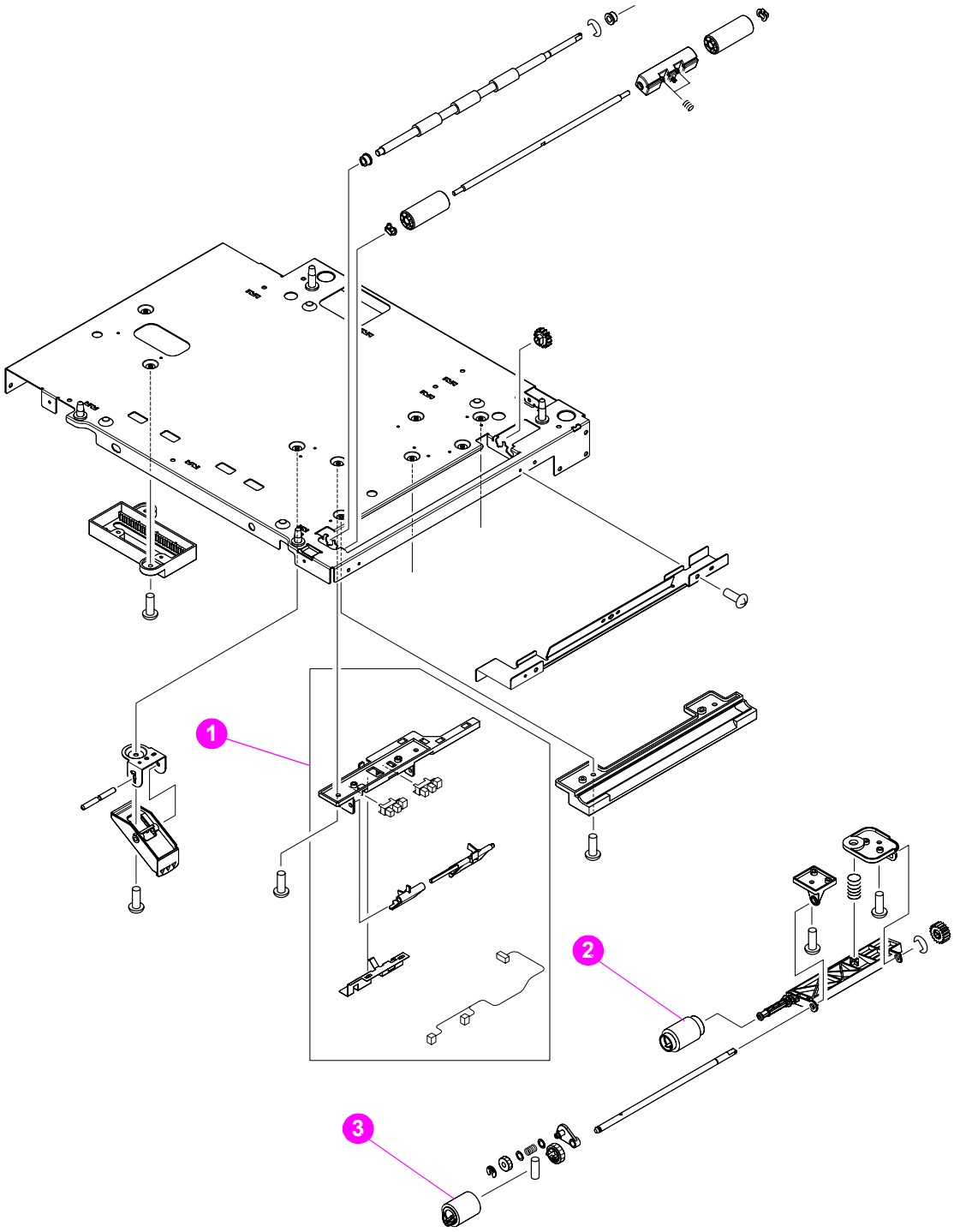

Figure 264. **1,500-sheet feeder paper-pickup assembly**

Table 114. 1,500-sheet feeder paper-pickup assembly

Part number	Description	Reference
RM1-0285-000CN	Paper sensor assembly, 1,500-sheet feeder	1; figure 264
RM1-0036-000CN	Roller, pickup; 1,500-sheet feeder	2; figure 264
RM1-0037-000CN	Roller, feed; 1,500-sheet feeder	3; figure 264

Download Free Service Manual at http://printer1.blogspot.com

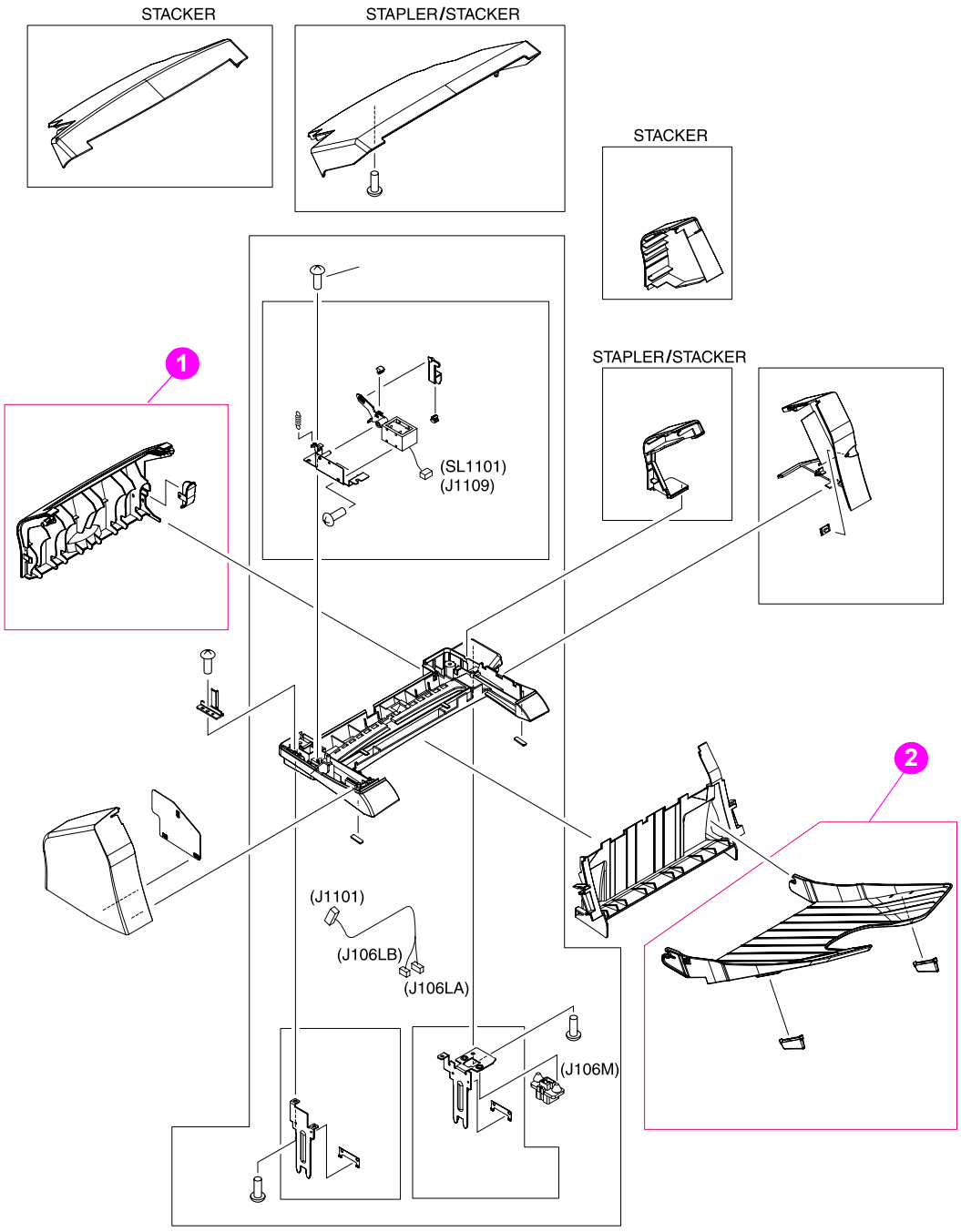

Figure 265. **Stacker and stapler/stacker**

Table 115. Stacker and stapler/stacker

Part number	Description	Reference
Q2443-67901	Cover, rear stacker and stapler/stacker	1; figure 265
Q2443-67902	Paper delivery tray assembly, stacker and stapler/stacker	2; figure 265

Download Free Service Manual at http://printer1.blogspot.com

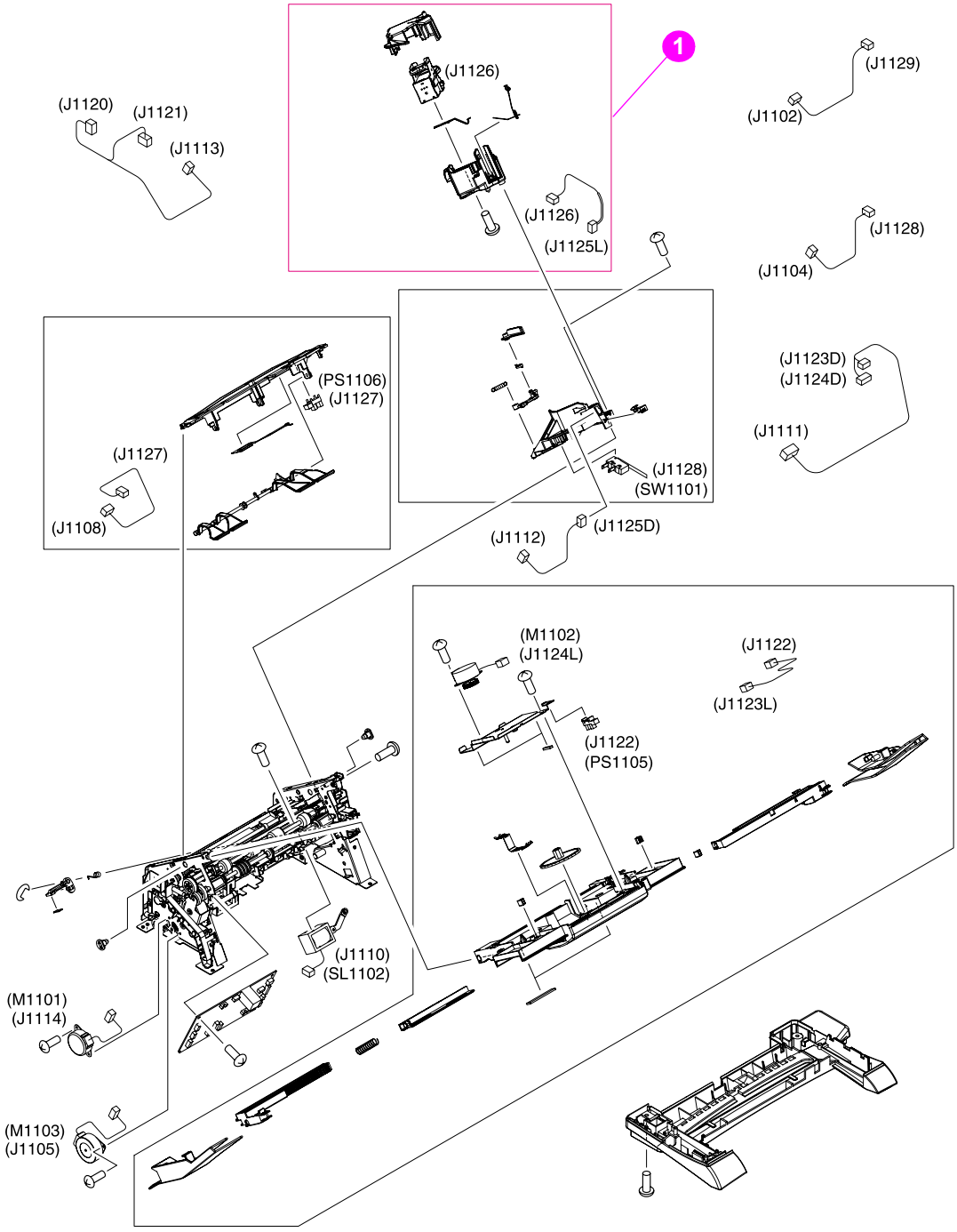

Figure 266. **Stacker and stapler/stacker**

Table 116. Stacker and stapler/stacker

Part number	Description	Reference
Q2443-67903	Staple module (stapler/stacker only)	1; figure 265
Q3216-60500	Staple cartridge stapler/stacker only)	not shown

Download Free Service Manual at http://printer1.blogspot.com

Alphabetical parts list

Table 117. Alphabetical pars list

Part number	Description	Reference
RC1-0714-000CN	Arm, front cover stop; 1,500-sheet feeder	5; figure 260
RC1-0211-000CN	Arm, paper pickup	6; figure 247
RC1-0003-000CN	Arm, toner cartridge release (print cartridge)	2; figure 243
RM1-0054-000CN	Brake assembly, right	3; figure 239
RC1-0206-000CN	Bushing, 500-sheet feeder	4; figure 256
RG1-4215-000CN	Cable, control panel	6; figure 237
RG1-4241-000CN	Cable, door sensor; 1,500-sheet feede	6; figure 261
RG1-4224-000CN	Cable, envelope feeder	4; figure 240
RG1-4223-000CN	Cable, feeder accessory	1; figure 241
RG1-4205-000CN	Cable, fuser (LJ 4200)	4; figure 253
RG1-4231-000CN	Cable, fuser (LJ 4300)	4; figure 253
RG1-4202-000CN	Cable, interface lower	2; figure 255
RG1-4201-000CN	Cable, interface upper	1; figure 255
RG1-4239-000CN	Cable, interface; 1,500-sheet feeder	2; figure 261
RM1-0042-000CN	Cable, JetLink accessory	6; figure 241
RG1-4212-000CN	Cable, laser	2; figure 239
RG1-4240-000CN	Cable, media size sensor; 1,500-sheet feeder	5; figure 261
RG1-4219-000CN	Cable, memory	1; figure 240
RG1-4250-000CN	Cable, sensor assembly	1; figure 256
RG1-4214-000CN	Cable, top bin-ful	18; figure 240
RG1-4213-000CN	Cable, top cover	7; figure 240
RH7-5358-000CN	Clutch, paper-feed assembly	4; figure 248
VS1-6175-006CN	Connector, interface; 1,500-sheet feeder	1; figure 261
RG1-4276-000CN	Control panel	5; figure 237
RM1-0047-000CN	Cover, cartridge door; LJ 4200	3; figure 237
RM1-0114-000CN	Cover, cartridge door; LJ 4300	3; figure 237
RC1-0291-000CN	Cover, duplexer	9; figure 237
RC1-0320-000CN	Cover, envelope feeder	3; figure 250
RC1-0344-000CN	Cover, fan (power supply shield)	10; figure 240
RC1-0288-000CN	Cover, formatter	1; figure 237
RM1-0050-000CN	Cover, front (be sure to order the correct name plate kit to install on the front cover)	4; figure 237
RM1-0273-000CN	Cover, front (door assembly); 1,500-sheet feeder	3; figure 260
RC1-0019-000CN	Cover, inner front right side	9; figure 240
RC1-0287-000CN	Cover, left	7; figure 237
RC1-0662-000CN	Cover, left; 1,500-sheet feeder	6; figure 260
RC1-0487-000CN	Cover, left; 500-sheet feeder	3; figure 254
RC1-0500-000CN	Cover, number display panel; 500-sheet feeder	2; figure 254

Download Free Service Manual at http://printer1.blogspot.com

Table 117. Alphabetical pars list (continued)

Part number	Description	Reference
RC1-0289-000CN	Cover, paper-handling	11; figure 237
RM1-0027-000CN	Cover, rear output bin	10; figure 237
Q2443-67901	Cover, rear stacker and stapler/stacker	1; figure 265
RC1-0663-000CN	Cover, rear; 1,500-sheet feeder	1; figure 260
RM1-0046-000CN	Cover, right	2; figure 237
RC1-0661-000CN	Cover, right; 1,500-sheet feeder	2; figure 260
RC1-0488-000CN	Cover, right; 500-sheet feeder	1; figure 254
RM1-0049-000CN	Cover, top assembly	12; figure 237
RC1-0290-000CN	Cover; 500-sheet tray, rear	8; figure 237
RM1-0002-000CN	Duplexing pendulum assembly	figure 245
RH7-1573-000CN	Fan, cooling left side (LJ 4200/4300	14; figure 240
RH7-1577-000CN	Fan, cooling right side (LJ 4300 only)	3; figure 240
RM1-0015-000CN	Fixing film, 110-V (LJ 4200)	2; figure 253
RM1-0103-000CN	Fixing film, 110-V (LJ 4300)	2; figure 253
RM1-0016-000CN	Fixing film, 220-V (LJ 4200)	2; figure 253
RM1-0104-000CN	Fixing film, 220-V (LJ 4300)	2; figure 253
RC1-0209-000CN	Flag, paper sensing	8; figure 247
RC1-0209-000CN	Flag, paper sensing	7; figure 256
RC1-0161-000CN	Flag, paper size sensor; 500-sheet feeder	1; figure 259
RC1-0060-000CN	Flag, paper-feed sensor	5; figure 238
Q2425-69004 (exchange) RM1-0013-000CN (new)	Fuser, 110-V (LJ 4200)	1; figure 253
Q2431-69005 (exchange) RM1-0101-000CN (new)	Fuser, 110-V (LJ 4300)	1; figure 253
Q2425-69005 (exchange) RM1-0014-000CN (new)	Fuser, 220-V (LJ 4200)	1; figure 253
Q2431-69006 (exchange) RM1-0102-000CN (new)	Fuser, 220-V (LJ 4300)	1; figure 253
RU5-0050-000CN	Gear, 30T	3; figure 248
RC1-0244-000CN	Guide right side power supply	5; figure 241
RC1-0270-000CN	Guide, cable DC controller	3; figure 238
RC1-0269-000CN	Guide, cable DC controller	7; figure 238
RC1-0153-000CN	Guide, cassette	2; figure 241
RC1-0386-000CN	Guide, connector cable	5; figure 240
RC1-0340-000CN	Guide, scanner cable 1	6; figure 239
RC1-0385-000CN	Guide, scanner cable 2	7; figure 239
RC1-0273-000CN	Guide, tray 2 left side	15; figure 240
RC1-0274-000CN	Guide, tray 2 right side	16; figure 240
RC1-0343-000CN	Holder, metal thermistor	11; figure 240
RC1-0212-000CN	Holder, paper pickup arm	3; figure 247
RC1-0208-000CN	Holder, paper sensor	9; figure 247

Download Free Service Manual at http://printer1.blogspot.com

Table 117. Alphabetical pars list (continued)

Part number	Description	Reference
RC1-0342-000CN	Holder, plastic thermistor	13; figure 240
Q2425-69001 (exchange) RM1-0173-000CN (new)	Laser/scanner assembly (LJ 4200)	1; figure 239
Q2431-690001 (exchange) RM1-0183-000CN (new)	Laser/scanner assembly (LJ 4300)	1; figure 239
RM1-0287-000CN	Lifter-drive assembly, 1,500-sheet feeder	figure 263
RM1-0033-000CN	Lifter-drive assembly, tray 2	figure 246
RM1-0208-000CN	Lifter-driver assembly; 500-sheet feeder	figure 258
Q2425-67901	LJ4200 name plate kit	Not shown
Q2431-67908	LJ4300 name plate kit	Not shown
RM1-0001-000CN	Main drive assembly	1; figure 243
RC1-0748-000CN	Media size sensor (inside), 1,500-sheet feeder	3; figure 261
RM1-0041-000CN	Media size sensor assembly; 500-sheet feeder	3; figure 255
RH1-1570-000CN	Motor, main (LJ4200/4300)	2; figure 238
RH7-1576-000CN	Motor, print cartridge (LJ 4300 only)	1; figure 238
RM1-0026-000CN	Output delivery assembly	figure 251
Q2443-67902	Paper delivery tray assembly, stacker and stapler/stacker	2; figure 265
RM1-0025-000CN	Paper feed belt assembly	1; figure 242
RG1-4221-000CN	Paper pickup sensor cable assembly (PS101 & PS107)	1; figure 247
RM1-0285-000CN	Paper sensor assembly, 1,500-sheet feeder	1; figure 264
RM1-0294-000CN	Paper size sensing assembly (outside), 1,500-sheet feeder	4; figure 261
RM1-0012-000CN	Paper-feed assembly	1; figure 248
RM1-0034-000CN	Paper-pickup assembly	figure 244
RM1-0056-000CN	Paper-pickup assembly; 500-sheet feeder	figure 257
RM1-0283-000CN	Paper-pickup drive assembly, 1,500-sheet feeder	figure 262
RG1-4238-000CN	PCA, 1,500-sheet feeder control	7; figure 261
RG1-4200-000CN	PCA, 500-sheet feeder control	3; figure 256
RG1-4236-000CN	PCA, DC controller (LJ 4200)	2; figure 240
RG1-4237-000CN	PCA, DC controller (LJ 4300)	2; figure 240
Q2425-69002 (exchange) RM1-0019-000CN (new)	Power supply, 110-V (LJ 4200	2; figure 242
Q2431-69002 (exchange) RM1-0107-000CN (new)	Power supply, 110-V (LJ 4300)	2; figure 242
Q2425-69003 (exchange) RM1-0020-000CN (new)	Power supply, 220-V (LJ 4200)	2; figure 242
Q2431-69003 (exchange) RM1-0108-000CN (new)	Power supply, 220-V (LJ 4300)	2; figure 242
RM1-0030-000CN	Rear tray assembly; 500-sheet tray	4; figure 259
RM1-0011-000CN	Registration assembly	figure 249
XD9-0137-000CN	Ring, E	2; figure 248
RL1-0019-000CN	Roller tray 1 pickup	5; figure 250
RM1-0037-000CN	Roller, feed; 1,500-sheet feeder	3; figure 264

Download Free Service Manual at http://printer1.blogspot.com

Table 117. Alphabetical pars list (continued)

Part number	Description	Reference
RC1-0070-000CN	Roller, fixing pressure	3; figure 253
RM1-0037-000CN	Roller, paper feed; 1,500-sheet feeder	4; figure 260
RM1-0037-000CN	Roller, paper feed; 500-sheet feeder	6; figure 256
RM1-0036-000CN	Roller, paper pickup; 500-sheet feeder	5; figure 256
RM1-0037-000CN	Roller, paper-feed	4; figure 247
RM1-0036-000CN	Roller, paper-pickup	5; figure 247
RM1-0036-000CN	Roller, pickup; 1,500-sheet feeder	2; figure 264
RM1-0037-000CN	Roller, separation; 500-sheet tray	3; figure 259
RC1-0044-000CN	Roller, transfer	6; figure 238
RM1-0286-000CN	Sensor gear assembly, 1,500-sheet feeder	8; figure 261
WG8-5362-000CN	Sensor, top bin-full	17; figure 240
WG8-5362-000CN	Sensor, Tray 2 paper (PS101); paper stack (PS107)	10; figure 247
RL1-0007-000CN	Separation pad, tray 1	6; figure 250
RC1-0210-000CN	Shaft, feeder roller	2; figure 247
RH7-5355-000CN	Solenoid, 500-sheet feeder	2; figure 256
RH1-5355-000CN	Solenoid, paper-pickup assembly	5; figure 239
RH7-5357-000CN	Solenoid, tray 1 pickup	2; figure 250
RC1-0213-000CN	Spring, compression	7; figure 247
RC1-0198-000CN	Spring, tension (lifter driver assembly)	6; figure 240
RC1-0061-000CN	Spring, torsion	4; figure 238
Q3216-60500	Staple cartridge stapler/stacker only)	not shown
Q2443-67903	Staple module (stapler/stacker only)	1; figure 266
RM1-0043-000CN	Swing plate assembly	4; figure 241
RC1-0268-000CN	Switch rod	4; figure 239
WC4-5139-000CN	Switch, top cover	8; figure 240
RH7-7116-000CN	Thermistor	12; figure 240
RC1-0335-000CN	Torque limiter, 500-sheet feeder	2; figure 259
RM1-0007-000CN	Transfer assembly	figure 252
RM1-0005-000CN	Tray 1	4; figure 250
RM1-0004-000CN	Tray 1 pickup assembly	1; figure 250
RM1-0041-000CN	Tray 2 media size sensor assembly	3; figure 241

Download Free Service Manual at http://printer1.blogspot.com

Numerical parts list

Table 118. Numerical pars list

Part number	Description	Reference
Q2425-67901	LJ4200 name plate kit	Not shown
Q2425-69001 (exchange) RM1-0173-000CN (new)	Laser/scanner assembly (LJ 4200)	1; figure 239
Q2425-69002 (exchange) RM1-0019-000CN (new)	Power supply, 110-V (LJ 4200	2; figure 242
Q2425-69003 (exchange) RM1-0020-000CN (new)	Power supply, 220-V (LJ 4200)	2; figure 242
Q2425-69004 (exchange) RM1-0013-000CN (new)	Fuser, 110-V (LJ 4200)	1; figure 253
Q2425-69005 (exchange) RM1-0014-000CN (new)	Fuser, 220-V (LJ 4200)	1; figure 253
Q2431-67908	LJ4300 name plate kit	Not shown
Q2431-690001 (exchange) RM1-0183-000CN (new)	Laser/scanner assembly (LJ 4300)	1; figure 239
Q2431-69002 (exchange) RM1-0107-000CN (new)	Power supply, 110-V (LJ 4300)	2; figure 242
Q2431-69003 (exchange) RM1-0108-000CN (new)	Power supply, 220-V (LJ 4300)	2; figure 242
Q2431-69005 (exchange) RM1-0101-000CN (new)	Fuser, 110-V (LJ 4300)	1; figure 253
Q2431-69006 (exchange) RM1-0102-000CN (new)	Fuser, 220-V (LJ 4300)	1; figure 253
Q2443-67901	Cover, rear stacker and stapler/stacker	1; figure 265
Q2443-67902	Paper delivery tray assembly, stacker and stapler/stacker	2; figure 265
Q2443-67903	Staple module (stapler/stacker only)	1; figure 266
Q3216-60500	Staple cartridge stapler/stacker only)	not shown
RC1-0003-000CN	Arm, toner cartridge release (print cartridge)	2; figure 243
RC1-0019-000CN	Cover, inner front right side	9; figure 240
RC1-0044-000CN	Roller, transfer	6; figure 238
RC1-0060-000CN	Flag, paper-feed sensor	5; figure 238
RC1-0061-000CN	Spring, torsion	4; figure 238
RC1-0070-000CN	Roller, fixing pressure	3; figure 253
RC1-0153-000CN	Guide, cassette	2; figure 241
RC1-0161-000CN	Flag, paper size sensor; 500-sheet feeder	1; figure 259
RC1-0198-000CN	Spring, tension (lifter driver assembly)	6; figure 240
RC1-0206-000CN	Bushing, 500-sheet feeder	4; figure 256
RC1-0208-000CN	Holder, paper sensor	9; figure 247
RC1-0209-000CN	Flag, paper sensing	8; figure 247
RC1-0209-000CN	Flag, paper sensing	7; figure 256
RC1-0210-000CN	Shaft, feeder roller	2; figure 247
RC1-0211-000CN	Arm, paper pickup	6; figure 247

Download Free Service Manual at http://printer1.blogspot.com

Table 118. Numerical pars list (continued)

Part number	Description	Reference
RC1-0212-000CN	Holder, paper pickup arm	3; figure 247
RC1-0213-000CN	Spring, compression	7; figure 247
RC1-0244-000CN	Guide right side power supply	5; figure 241
RC1-0268-000CN	Switch rod	4; figure 239
RC1-0269-000CN	Guide, cable DC controller	7; figure 238
RC1-0270-000CN	Guide, cable DC controller	3; figure 238
RC1-0273-000CN	Guide, tray 2 left side	15; figure 240
RC1-0274-000CN	Guide, tray 2 right side	16; figure 240
RC1-0287-000CN	Cover, left	7; figure 237
RC1-0288-000CN	Cover, formatter	1; figure 237
RC1-0289-000CN	Cover, paper-handling	11; figure 237
RC1-0290-000CN	Cover; 500-sheet tray, rear	8; figure 237
RC1-0291-000CN	Cover, duplexer	9; figure 237
RC1-0320-000CN	Cover, envelope feede	3; figure 250
RC1-0335-000CN	Torque limiter, 500-sheet feeder	2; figure 259
RC1-0340-000CN	Guide, scanner cable 1	6; figure 239
RC1-0342-000CN	Holder, plastic thermistor	13; figure 240
RC1-0343-000CN	Holder, metal thermistor	11; figure 240
RC1-0344-000CN	Cover, fan (power supply shield)	10; figure 240
RC1-0385-000CN	Guide, scanner cable 2	7; figure 239
RC1-0386-000CN	Guide, connector cable	5; figure 240
RC1-0487-000CN	Cover, left; 500-sheet feeder	3; figure 254
RC1-0488-000CN	Cover, right; 500-sheet feeder	1; figure 254
RC1-0500-000CN	Cover, number display panel; 500-sheet feeder	2; figure 254
RC1-0661-000CN	Cover, right; 1,500-sheet feeder	2; figure 260
RC1-0662-000CN	Cover, left; 1,500-sheet feeder	6; figure 260
RC1-0663-000CN	Cover, rear; 1,500-sheet feeder	1; figure 260
RC1-0714-000CN	Arm, front cover stop; 1,500-sheet feeder	5; figure 260
RC1-0748-000CN	Media size sensor (inside), 1,500-sheet feeder	3; figure 261
RG1-4200-000CN	PCA, 500-sheet feeder contro	3; figure 256
RG1-4201-000CN	Cable, interface upper	1; figure 255
RG1-4202-000CN	Cable, interface lower	2; figure 255
RG1-4205-000CN	Cable, fuser (LJ 4200)	4; figure 253
RG1-4212-000CN	Cable, laser	2; figure 239
RG1-4213-000CN	Cable, top cover	7; figure 240
RG1-4214-000CN	Cable, top bin-ful	18; figure 240
RG1-4215-000CN	Cable, control panel	6; figure 237
RG1-4219-000CN	Cable, memory	1; figure 240
RG1-4221-000CN	Paper pickup sensor cable assembly (PS101 & PS107)	1; figure 247
RG1-4223-000CN	Cable, feeder accessory	1; figure 241

Download Free Service Manual at http://printer1.blogspot.com

Table 118. Numerical pars list (continued)

Part number	Description	Reference
RG1-4224-000CN	Cable, envelope feeder	4; figure 240
RG1-4231-000CN	Cable, fuser (LJ 4300)	4; figure 253
RG1-4236-000CN	PCA, DC controller (LJ 4200)	2; figure 240
RG1-4237-000CN	PCA, DC controller (LJ 4300)	2; figure 240
RG1-4238-000CN	PCA, 1,500-sheet feeder control	7; figure 261
RG1-4239-000CN	Cable, interface; 1,500-sheet feeder	2; figure 261
RG1-4240-000CN	Cable, media size sensor; 1,500-sheet feeder	5; figure 261
RG1-4241-000CN	Cable, door sensor; 1,500-sheet feeder	6; figure 261
RG1-4250-000CN	Cable, sensor assembly	1; figure 256
RG1-4276-000CN	Control panel	5; figure 237
RH1-1570-000CN	Motor, main (LJ4200/4300)	2; figure 238
RH1-5355-000CN	Solenoid, paper-pickup assembly	5; figure 239
RH7-1573-000CN	Fan, cooling left side (LJ 4200/4300	14; figure 240
RH7-1576-000CN	Motor, print cartridge (LJ 4300 only)	1; figure 238
RH7-1577-000CN	Fan, cooling right side (LJ 4300 only)	3; figure 240
RH7-5355-000CN	Solenoid, 500-sheet feeder	2; figure 256
RH7-5357-000CN	Solenoid, tray 1 pickup	2; figure 250
RH7-5358-000CN	Clutch, paper-feed assembly	4; figure 248
RH7-7116-000CN	Thermistor	12; figure 240
RL1-0007-000CN	Separation pad, tray 1	6; figure 250
RL1-0019-000CN	Roller tray 1 pickup	5; figure 250
RM1-0001-000CN	Main drive assembly	1; figure 243
RM1-0002-000CN	Duplexing pendulum assembly	figure 245
RM1-0004-000CN	Tray 1 pickup assembly	1; figure 250
RM1-0005-000CN	Tray 1	4; figure 250
RM1-0007-000CN	Transfer assembly	figure 252
RM1-0011-000CN	Registration assembly	figure 249
RM1-0012-000CN	Paper-feed assembly	1; figure 248
RM1-0015-000CN	Fixing film, 110-V (LJ 4200)	2; figure 253
RM1-0016-000CN	Fixing film, 220-V (LJ 4200)	2; figure 253
RM1-0025-000CN	Paper feed belt assembly	1; figure 242
RM1-0026-000CN	Output delivery assembly	figure 251
RM1-0027-000CN	Cover, rear output bin	10; figure 237
RM1-0030-000CN	Rear tray assembly; 500-sheet tray	4; figure 259
RM1-0033-000CN	Lifter-drive assembly, tray 2	figure 246
RM1-0034-000CN	Paper-pickup assembly	figure 244
RM1-0036-000CN	Roller, paper-pickup	5; figure 247
RM1-0036-000CN	Roller, paper pickup; 500-sheet feeder	5; figure 256
RM1-0036-000CN	Roller, pickup; 1,500-sheet feeder	2; figure 264
RM1-0037-000CN	Roller, paper-feed	4; figure 247

Download Free Service Manual at http://printer1.blogspot.com

Table 118. Numerical pars list (continued)

Part number	Description	Reference
RM1-0037-000CN	Roller, paper feed; 500-sheet feeder	6; figure 256
RM1-0037-000CN	Roller, separation; 500-sheet tray	3; figure 259
RM1-0037-000CN	Roller, paper feed; 1,500-sheet feeder	4; figure 260
RM1-0037-000CN	Roller, feed; 1,500-sheet feeder	3; figure 264
RM1-0041-000CN	Tray 2 media size sensor assembly	3; figure 241
RM1-0041-000CN	Media size sensor assembly; 500-sheet feeder	3; figure 255
RM1-0042-000CN	Cable, JetLink accessory	6; figure 241
RM1-0043-000CN	Swing plate assembly	4; figure 241
RM1-0046-000CN	Cover, right	2; figure 237
RM1-0047-000CN	Cover, cartridge door; LJ 4200	3; figure 237
RM1-0049-000CN	Cover, top assembly	12; figure 237
RM1-0050-000CN	Cover, front (be sure to order the correct name plate kit to install on the front cover)	4; figure 237
RM1-0054-000CN	Brake assembly, right	3; figure 239
RM1-0056-000CN	Paper-pickup assembly; 500-sheet feeder	figure 257
RM1-0103-000CN	Fixing film, 110-V (LJ 4300)	2; figure 253
RM1-0104-000CN	Fixing film, 220-V (LJ 4300)	2; figure 253
RM1-0114-000CN	Cover, cartridge door; LJ 4300	3; figure 237
RM1-0208-000CN	Lifter-driver assembly; 500-sheet feeder	figure 258
RM1-0273-000CN	Cover, front (door assembly); 1,500-sheet feeder	3; figure 260
RM1-0283-000CN	Paper-pickup drive assembly, 1,500-sheet feeder	figure 262
RM1-0285-000CN	Paper sensor assembly, 1,500-sheet feeder	1; figure 264
RM1-0286-000CN	Sensor gear assembly, 1,500-sheet feeder	8; figure 261
RM1-0287-000CN	Lifter-drive assembly, 1,500-sheet feeder	figure 263
RM1-0294-000CN	Paper size sensing assembly (outside), 1,500-sheet feeder	4; figure 261
RU5-0050-000CN	Gear, 30T	3; figure 248
VS1-6175-006CN	Connector, interface; 1,500-sheet feeder	1; figure 261
WC4-5139-000CN	Switch, top cover	8; figure 240
WG8-5362-000CN	Sensor, top bin-full	17; figure 240
WG8-5362-000CN	Sensor, Tray 2 paper (PS101); paper stack (PS107	10; figure 247
XD9-0137-000CN	Ring, E	2; figure 248

Download Free Service Manual at http://printer1.blogspot.com

Index

Numerics

1,200-dpi resolution 47
1,500-sheet feeder
  cables 399
  capacity 11
  connector interface 399
  control PCA 220, 343
  covers and panels 397
  door 215
  door sensor 343
  door sensor cable 399
  feed rollers 214, 342, 402
  feeder control PCA 399
  front cover stop arm 397
  jams 302
  lifter-drive assembly 222, 341, 401
  lifting mechanism 94
  location of main parts 341
  main assemblies 399
  media size detection 83
  media-size sensor 399
  media-size sensor cable 399
  media specifications 11
  media-size sensor 221
  operation 78, 92
  paper-feed roller 397
  paper pickup assembly 402
  paper pickup drive assembly 400
  paper-pickup drive assembly 225
  paper pickup solenoid 343
  paper sensor 343
  paper sensor assembly 402
  paper size sensing assembly 399
  paper size sensor 343
  paper stack position sensor 94, 343
  part number 364
  pickup roller 402
  pickup-drive assembly 341
  rear cover 217
  registration settings 46
  removing and replacing assembly 214
  right-side cover 218
  sensor gear assembly 399
  separation roller 214, 342
  testing paper path 300
  wiring diagram 351
1,500-sheet tray. *See* 1,500-sheet feeder
2-sided printing. *See* duplexer
300-dpi resolution 47
500-sheet feeder
  bushing 393
  cables 391
  capacity 11
  control PCA 207, 340, 393
  cover 369
  covers and panels 390
  feed rollers 204
  illustration and part numbers 396
  jams 302
  lifter-drive assembly 395, 209
  location of main parts 339
  main assemblies 391
  media size detection 83
  media size sensor 208
  media-size sensor assembly 391
  media specifications 11
  operation 78, 90
  paper feed roller 393
  paper pickup assemblies 394
  paper-pickup drive assembly 210
  paper pickup rollers 393
  paper pickup solenoid 340
  paper sensing flag 393
  paper sensor 340
  paper size sensor flag 396
  paper size switch 340
  paper stack position sensor 340
  part number 364
  rear tray assemblies 396
  removing and replacing assembly 204
  right-side cover, removing and replacing 204
  separation roller 396
  solenoid 393
  switches 90
  testing paper path 300
  torque limiter 396
  tray types 43
  wiring diagram 350
500-sheet stacker. See stacker
500-sheet stapler/stacker. *See* stapler/stacker
500-sheet tray. *See* tray 2 26
600-dpi resolution 47

A

A4 paper, override letter 45
AC bias 122
access denied menus locked message 40, 258
accessories
  components, location 339
  covers 143
  list of installed on configuration page 241
  locking 136
  ordering 28, 364
  paper-handling 364
  product features 3
  product, part, and exchange numbers 364
  removing and replacing 204
  wiring diagrams 348
accounting information from usage page 239
acoustic ratings 8
adhesives
  on envelopes 17
  on labels 16
agreements, service 29, 363
alerts
  configuring with EWS 244
  generated from Printer Status and Alerts software 245
amperages 8
append carriage return setting 46
Apple EtherTalk setting 52
arrow buttons 36, 37

Download Free Service Manual at http://printer1.blogspot.com

assemblies
1,500-sheet feeder 399
500-sheet feeder 391
500-sheet feeder media-size sensor 391
500-sheet feeder sensor cable 393
brake, left 373
brake, right 373
control panel 157
duplexing pendulum 332, 380
fuser 333
illustration and part numbers 371
laser/scanner 76, 332
lifter-drive, printer 332
lifter-drive, 1,500-sheet feeder 341, 401
lifter-drive, 500-sheet feeder 339, 395
main 370
main drive 332, 378
order in which to remove 135
output delivery 333, 386
paper delivery tray, stacker and stapler/stacker 403
paper feed 332, 383
paper feed belt 377
paper pickup 382
paper-pickup 379
paper-pickup drive 332
paper pickup drive, 1,500-sheet feeder 400
paper pickup sensor cable 382
paper pickup, 1,500-sheet feeder 402
paper pickup, 500-sheet feeder 394
paper size sensing, 1,500-sheet feeder 399
paper-feed belt 191
parts removal tree 135
pickup-drive, 1,500-sheet feeder 341
pickup gear, 500-sheet feeder 339
power supply 377
rear tray, 500-sheet tray 396
registration 80, 82, 85, 90, 92, 384
registration roller 333
removing and replacing. *See assembly name*
right side 376
sensor gear, 1,500-sheet feeder 399
stapler/stacker 344
swing plate 376
transfer 387
tray 1 pickup 333, 385
tray 2 media-size sensor 376
tray 2 lifter-drive 381
Attention light 36
authorized resellers and support 29, 363
Auto Cleaning Page 57
auto-continue messages 129
auto continue setting 50
automatic jam recover 296

B

Back Arrow button 36, 37
back covers. *See* covers
background gray on images, troubleshooting 317
BD (beam detect) PCA 76
BD (beam detect) signal 121
beam detect (BD) mirror in laser/scanner operation 76, 121
beam detect (BD) PCA 76
beam detect (BD) signal 121
beam operation 120, 121
biases
AC 122
DC 122
developing 73
fuser 73
primary charging 73
transfer DC negative bias 73
transfer DC positive bias 73
transfer voltage 73
bidirectional communication
interface 128
parallel connection 130
Printer Job Language (PJL) 130
settings 52
bins
connectors 356
cover 369
jam locations 295
operation 78
order in which to remove 135
product features 3
setting destination 44
See also rear output bin; top output bin
black page printed, troubleshooting 322
blank control panel, troubleshooting 236, 238
blank page printed, troubleshooting 323
blown fuse 237
blurry print, troubleshooting 321
BOOTP, configuring 52
born-on date 250
both sides, printing on. *See* duplexer
brake assembly
left 373
right 373
buffer overflow 281
bushing, 500-sheet feeder 393
buttons on control panel 36, 37

C

cabinet for printer, locking 136
cables
1,500-sheet feeder 399
500-sheet feeder 391
control panel 369
envelope feeder 375
feeder accessory 376
fuser 389
JetLink accessory 376
laser 373
memory 375
part numbers 365
power supply ribbon 356
top bin-full 375
top cover 375
cams
staple 107, 114
tray 1 80
Canadian Declaration of Conformity 26
Cancel Job button 36, 37
capacity
1,500-sheet tray 11
envelope feeder 12
stapler/stacker 13
tray 1 10
tray 2 11
captive star washers 134
carbonless paper, print quality problems 306
card stock
fuser modes 47
specifications 10, 18
stacker and stapler/stacker support 13
carriage return settings 46
cartridges. *See* print cartridges; staple cartridges
cassette guide 376

Download Free Service Manual at http://printer1.blogspot.com

cassettes. *See* trays
CD-ROM, software
  documentation contents 367
  part numbers 367
character sets, selecting 46
character voids in images, troubleshooting 315
charging biases 73
charging process 118, 120
checks. *See* tests
circuit boards, component replacement 28
circuit requirements 8
circuits
  fuser-control 71
  fusing heater safety 72
  high-voltage 71, 73
  laser control 77
  laser/scanner control 77
  location 338
  low-voltage 71, 74
  overcurrent/overvoltage protection 75
clamp solenoid 107, 111, 346
cleaning
  fuser 55
  procedures 54, 55
  rollers 325
  transfer charging roller and photosensitive drum 118, 125
cleaning page
  automatic 57
  frequency 54
  manual 55
  running from control panel 48
clearable warnings
  configuring 50
  messages 129
clearing
  event log 249
  jams. *See* jams
clothing, washing toner off 20
clutches
  connectors 356
  feed 79
  feed roller 82
  paper-feed assembly 383
coating on paper, print quality problems 306
coating with fluorine 124
cold reset
  description 249, 251
  performing 251
communications
  checks for troubleshooting 255
  settings 52
components
  location of main 332
  order in which to remove 135
  troubleshooting 331
condensation problems 232
configuration page
  description 41
  printing 241
  printing before service 159, 181, 207
  printing when control panel menus not available 252
  using for troubleshooting 239, 241
  viewing with embedded Web server 244
configurations of printer 3
Configure Device menu on control panel 44
connectivity
  cards 365
  product features 3
connector cable guide 375
connector interface, 1,500-sheet feeder 399
connectors
  diagram for DC controller 356
  testing direct connect (parallel) 255
conserving
  power 127
  toner 128
consumption
  power 7
  toner 24
control panel
  access denied message 40
  blank, troubleshooting 236, 238
  buttons 37
  connector 356
  default settings 38
  help system 37
  illustration and part number 369
  layout 36
  lights 36
  lock 241
  messages 257
  operation 130
  password 241
  returning settings to factory defaults 251
  setting display language 38, 51
  troubleshooting 236
control panel assembly
  order in which to remove 135
  removing and replacing 157
control panel menu map
  description 41
  printing 39, 239, 240
  printing before changing printer settings or replacing formatter assembly 239
  using for troubleshooting 239, 240
control panel menus
  access denied message 40
  changing 39
  Configure Device 44
  description 39
  Diagnostics 248
  I/O 52
  Information 41
  locked message 258
  Paper Handling 42
  PCL 45
  Print Quality 46
  Printing 44
  Resets 247
  Retrieve Job 41
  Service 249, 251
  Stapler/stacker 51
  System Setup 49
  unlocking 251
control panel overlay
  order in which to remove 135
  removing and replacing 156
control PCA
  1,500-sheet feeder 220, 343
  500 sheet feeder 207
  500-sheet feeder, location 340
cooling fans. *See* fans
copies, setting default number 44

Download Free Service Manual at http://printer1.blogspot.com

counts
estimated pages remaining for print cartridge 242
jobs processed 242
maintenance 249
pages printed 241, 242
resetting with NVRAM initialization 251
setting for pages 249
Courier font setting 45
covers
1,500-sheet feeder 397
1,500-sheet feeder rear 217
1,500-sheet feeder right-side 218
500-sheet feeder 204, 390
cleaning 55
envelope feeder 385
fan 375
formatter 145
illustration and part numbers 368, 369
inner front right side 375
jam locations 295
jams 89
left-side 151
order in which to remove 135
right-side 149, 160
stacker 403
stapler/stacker 403
top 146, 160
CPU types 128
CR setting 46
creases 305
creases, troubleshooting 319
critical messages on control panel 257
See also messages
crooked images, troubleshooting 318
curled images, troubleshooting 319
curled media, troubleshooting 14
customer support. *See* support
custom-size paper
500-sheet tray specifications 11
setting default size 44
stacker or stapler/stacker specifications 13
tray 1 specifications 10
tray 2 specifications 11

D

dark printing
setting toner density 48
troubleshooting 324
Data light 36
data transmission settings 52
DC bias 122
DC controller
block diagram 356
troubleshooting 286
DC controller assembly, order in which to remove 135
DC controller cable guide 371
DC controller PCA
formatter operation 127
image formation operation 118
jam detection 87
location 338
operation 69
paper pickup and feed operation 79
part number 375
print cartridge memory chip operation 126
removing and replacing 181
stacker and stapler/stacker operation 101
stapler/stacker operation 106
toner level detection 75
tray 1 operation 80
tray 2 operation 82
DC motors. *See* motors
DC voltages, generation 71
Declarations of Conformity (DOC) 26
default gateway, configuring 52
defaults
changing with EWS 244
control panel 38
factory 38
for printing 44
restoring 247
restoring using cold reset 251
setting for default paper size when formatter replaced 249
types 38
defects in print quality
examples and solutions 311
repetitive 325
deflector solenoids
stacker 104, 346
stapler/stacker 107, 109, 346
deleting jobs
using Cancel Job button 37
using control panel Retrieve job menu 41
delivery area jam troubleshooting 329
delivery operation 86
delivery paper full sensor
stacker 104
stapler/stacker 107
delivery roller disengaging sensor
location 345
operation 107
density control
operation 122
setting 48
developing biases 73
developing cylinder 73
developing process 118, 122
developing unit 122
devices
configuring on Configure Device menu 44
configuring with EWS 244
viewing status with EWS 244
DHCP, configuring 52
Diagnostics menu on control panel 248
diagrams
timing 357
wiring 348
dimensions. *See* sizes
DIMMs (dual inline memory modules)
device failure 260
expandability 8
increasing print speed 129
installing firmware 129
list of installed on configuration page 241
mounting location 127
order in which to remove 135
part numbers 365
printing file directory 41
removing and replacing 160
setting slot location for fonts 45
slots 129
write protected 260
See also memory
diodes in laser/scanner operation 76, 77, 121
direct connection test 255
disk accessory. *See* hard disk accessory
display, control panel. *See* control panel
distorted images, troubleshooting 318

Download Free Service Manual at http://printer1.blogspot.com

DLC/LLC setting 52
DOC (Declarations of Conformity) 26
documentation
CD-ROM contents 367
ordering 28
ordering related 362
part numbers 367
door open switch
stacker 104, 345
stapler/stacker 107, 345
door sensor cable, 1,500-sheet feeder 399
door sensor, 1,500-sheet feeder 343
doors. *See* covers
dots or specks on images, troubleshooting 314
dots per inch (dpi), setting 47
double-sided printing. *See* duplexing
Down Arrow button 36, 37
downloading documentation 367
dpi (dots per inch), setting 47
draft quality printing
using EconoMode 48
using resolution settings 47
driver settings 40
D-roller. *See* pickup rollers
dropouts in images, troubleshooting 315
dropouts on media, troubleshooting 14
drum rotation functional check 310
drum. *See* photosensitive drum
dual inline memory modules (DIMMs). *See* DIMMs (dual inline memory modules)
duplex feed motor 99
duplex printing accessory. *See* duplexer
duplexer
and envelopes 17
connection problem 258
cover 369
fan, life expectancy 59
jam detection 100
jam locations 295
jams 303
media specifications 12
motors 99
operation 98
part number 364
product features 3
setting duplexing on or off 44
space requirements 5
testing paper path 300
troubleshooting 266, 274, 287, 293
wiring diagram 352
duplexer driver 98
duplexing pendulum assembly
illustration and part number 380
location 332
order in which to remove 135
removing and replacing 165
dynamic I/O switching 130

E

EconoMode 128
and print quality 309
recommendations 309
setting at control panel 48
EIO
bad connection 282
isolating hard-disk errors 252
settings 52
troubleshooting 255, 260, 294
EIO cards
mounting location 127, 128
part numbers 365
resetting with NVRAM 251
electrophotographic process 310
electrostatic discharge (ESD) protection 133
electrostatic latent image formation 118, 120
e-mail
setting up alerts with EWS 244
setting up incoming and outgoing 244
embedded Web server (EWS). *See* EWS (embedded Web server)
embossed paper 19
EMI statement, Korea 21
Energy Star 24
engine test
button 356
description 236, 254
envelope feeder
cable 375
capacity 12
connection problem 258
connector 356
cover 385
jam detection 97
media specifications 12
operation 95
part number 364
wiring diagram 353
envelope-feeder driver 95
envelope multiple feed sensor 97
envelope pickup motor 96
envelope sensor 96
envelope-size sensor 96
envelopes
adhesives 17
margins 18
setting default size 44
specifications 10, 12, 17
storage 18
environmental
print quality problems 307
specifications 5, 7
stewardship program 24
error messages
alphabetical list 258
control panel 257
numerical list 274
See also messages
error pages for PS 45
errors
configuring printer reaction to 50
See also troubleshooting
ESD (electrostatic discharge) protection 133
Ethernet cards 365
EtherTalk setting 52
Europe, customer support 30
event log
clearing 249
printing 248
resetting with NVRAM initialization 251
viewing on configuration page 241
viewing with EWS 244

Download Free Service Manual at http://printer1.blogspot.com

EWS (embedded Web server)
description 243
Information tab 244
links for support and supplies 245
Networking tab 244
opening 243
requirements 243
setting language 244
Settings tab 244
using for troubleshooting 239, 243
viewing with Printer Status and Alerts 245
exchange numbers
accessories and supplies 364
memory, fonts, and mass storage 365
printer maintenance kits 366
expandable memory 3, 8

F

face-down tray paper-full sensor 100
factory defaults
description 38
restoring 247
restoring using cold reset 251
failure detection for motors 70
fan motor 70
fans
conditions turning them on 237
connectors 356
cooling left side 375
cooling right side 375
cover (power supply shield) 375
left side, removing and replacing 168
life expectancy 59
location 337
main cooling 337
order in which to remove 135
right side, removing and replacing 170
right-side cooling 337
troubleshooting 236, 237, 287
Fast Ethernet cards 365
Fast InfraRed Receiver, mounting location 127
fasteners
measurement guide 134
used in printer 134
FastRes resolution, setting 47
FCC regulations ii, 23
features of printer 3
feed clutch 79
feed mechanism and motor, stacker and stapler/stacker 346
feed motor
stacker 104
stapler/stacker 107
feed roller clutch 82
feed rollers
1,500-sheet feeder 214, 342, 402
500-sheet feeder, location 339
500-sheet feeder, removing and replacing 204
cleaning 55
life expectancies 59
location 335
location, 500-sheet feeder 339
operation 78, 82, 84, 85
order in which to remove 135
shaft 382
tray 2, removing and replacing 141
feeder accessory cable 376
feeder units. *See* 500-sheet feeder; 1,500-sheet feeder
feeding problems, troubleshooting 14, 304
field replacement units (FRUs). *See* FRUs (field replaceable units)
file directory
printing 41
using for troubleshooting 239
file operation failure 259
Finland laser statement 22
firmware DIMMs
installing 129
order in which to remove 135
part numbers 365
removing and replacing 160
fixing delivery sensor
stacker 104
stapler/stacker 109
fixing film 389
fixing pressure roller 389
flags
paper sensing 382
paper sensing, 500-sheet feeder 393
paper size sensor, 500-sheet feeder 396
paper-feed sensor 371
flash DIMMs
description 128
device failure 260
part numbers 365
printing file directory 41
write protected 260
flat washers 134
flowchart for troubleshooting 234
fluorine coating 124
focusing lenses in laser/scanner operation 76, 121
folded paper 304
folds, troubleshooting 319
font DIMMs
part numbers 365
setting slot location 45
font lists
printing 41
using for troubleshooting 239
fonts
numbers assigned by printer 45
part numbers 365
selecting symbol set 46
setting Courier 45
setting internal, soft, or slot location 45
setting pitch 45
form length setting 45
formatter
cover 145
operation 127
order in which to remove 135
part numbers 366
processor types 128
resetting page count 249
test page 254
formatter assembly 161
frame type for IPX/SPX 52
frequently asked questions, support website 363
FRUs (field replaceable units)
assemblies and subassemblies 367
ordering 362
service approach 28
full-duplex communication mode 52
fuse assembly delivery 78
fuse blown, troubleshooting 237

Download Free Service Manual at http://printer1.blogspot.com

fuser
bias 73
cable 389
cleaning 55
illustration and part numbers 389
jam locations 295
jams 280
life expectancy 59
modes 47
operation 86
order in which to remove 135
over-temperature protection 72
part numbers 366
removing and replacing 162
temperature monitoring 71
troubleshooting 262, 284
voltage monitoring 71
fuser assembly 333
fuser assembly delivery sensor
location 336
operation 78
fuser-control circuit 71
fuser delivery sensor 87, 100
fuser heaters 71
fuser thermal switch 71
fuser thermistor
monitoring voltage 72
operation 71
part number 375
fuser-control circuit 71
fuses for voltage protection 75
fusing
process 118, 124
temperature 19
fusing heater safety circuit 72

G

gateway, configuring 52
glossy paper 19
gray background on images, troubleshooting 14, 317
grounding printer chassis 133

H

half self-test functional check 310
half-duplex communication mode 52
hard disk accessory
description 128
device failure 259
initialization 252
mounting location 127, 128
part number 365
printing file directory 41
reformatting 252
write protected 259
heaters for fuser 71
heavy paper
fuser modes 47
specifications 18
height of printer 6
held jobs
description 41
settings 49
help
control panel 37
See also support; troubleshooting
Help button 36, 37
high-voltage circuit 73
location 338
operation 71
horizontal lines on images, troubleshooting 316
HP Connect Online 362
HP Customer Care Online 362
HP Fast InfraRed Receiver, mounting location 127
HP Jetdirect page 256
HP Jetdirect print servers
configuring 244
in printer configurations 3
internal diagnostics 256
settings 52
slot location 52
troubleshooting 255
HP Memory Enhancement technology (MEt) 129
HP PartnerCare 29, 363
HP PartSurfer 362
HP Printing Supplies Returns and Recycling Program 24
HP service agreements 29, 363
HP Technical Training 362
HP Ultra Precise cartridges. *See* print cartridges
HP-authorized resellers and support 363
humidity specifications 8

I

I/O
buffer overflow 281
clearing input buffer 247
information on configuration page 241
interfaces 128
switching 128, 130
timeout 52
I/O menu on control panel 52
idle timeout, configuring 52
image formation system operation 118
image quality. *See* print quality
indicator lights on control panel 36
Information menu on control panel 41
information pages, printing and using to troubleshoot 239
Information tab, EWS 244
initialization
hard disk accessory 252
NVRAM 251
ink specifications 14
input trays. *See* tray 1; tray 2; 500-sheet feeder; 1,500-sheet feeder; trays
installing firmware DIMM 129
interfaces
cables 365
features 128
part numbers 365
troubleshooting 255
internal fonts, setting slot location 45
IP address
configuring 256
configuring at control panel 52
default 256
IPX/SPX settings 52

Download Free Service Manual at http://printer1.blogspot.com

J

jams
- automatic recovery 296
- avoiding 297
- common causes 297
- connection areas 328
- delivery areas 329
- duplexer 100, 303
- envelope feeder detection 97
- fuser 280
- locations 295
- loose toner after clearing 295
- paper path 303
- persistent 298
- printer detection 87
- recovery setting 50
- recovery settings 50
- sensors 100
- stacker 105, 327
- stapler/stacker 117, 327
- tray 1 301
- tray 2 301
- troubleshooting 276, 277, 278, 279, 280

Japanese VCCI statement 21
Jetdirect print servers. *See* HP Jetdirect print servers
JetLink accessory cable 376
jobs. *See* print jobs
jogger home position sensor, stapler/stacker 107, 345
jogger mechanism, stapler/stacker 346
jogger motor, stapler/stacker 107, 110, 346

K

kits for printer maintenance 366
Korean EMI statement 21

L

labels
- adhesives 16
- fuser modes 47
- product model and serial number 4
- specifications 11, 16
- stapler/stacker support 13

landscape orientation, setting as default 45
languages
- automatic switching in printer 130
- embedded Web server 244
- font DIMMs 365
- setting for control panel 38, 51
- setting printer personality 49
- slow switching 52

laser beam operation 76, 120, 121
laser cable 373
laser control circuit 77
laser driver PCA 76, 77
laser safety statements
- Finland 22
- U.S. 20

laser/scanner assembly
- illustration and part number 373
- location 332
- operation 76
- order in which to remove 135
- part numbers 366
- removing and replacing 173, 181
- safety information 20
- safety precautions 133

laser/scanner control circuit 77
laser/scanner PCA 356
LED PCA 347
LEDs on control panel 36
left covers. *See* covers
left-side cover 151
lenses in laser/scanner operation 76
letter paper, override A4 45
letterhead
- fuser modes 47
- print quality problems 306
- specifications 14, 308

life expectancies
- components 59
- print cartridges 31

lifter-drive assembly
- 1,500-sheet feeder 222, 401
- 500-sheet feeder 339, 395
- printer 332

lifter-drive motor
- location 337
- operation 70, 84

lifter motor 70
lifter-drive assembly
- 1,500-sheet feeder 341
- 500-sheet feeder 209

lifting mechanism for 1,500-sheet feeder 94
light print
- setting toner density 48
- troubleshooting 313

lights on control panel 36
line feed settings 46
line spacing setting 45
line voltage, allowable variations
- *See also* voltages

lines on images, troubleshooting 316, 320
lines scattered on images, troubleshooting 321
link speed for DLC/LLC 52
loading staples 62
LocalTalk connectivity card 365
lock washers 134
locked menus 258
locking printer cabinet, printer, and trays 136
logs. *See* event log
loose toner on images, troubleshooting 317
low toner 50
low-temperature inks 14
low-voltage circuit
- location 338
- operation 71, 74

M

Macintosh Apple EtherTalk settings 52
main cooling fan 337
main drive assembly
- illustration and part number 378
- location 332
- order in which to remove 135
- removing and replacing 186

main drive motor 337
main motor
- connector 356
- illustration and part number 371
- operation 70
- order in which to remove 135
- removing and replacing 177
- speed 121
- troubleshooting operation 236

Download Free Service Manual at http://printer1.blogspot.com

maintenance
agreements 29, 363
kits for printer 366
preventative maintenance notice 242
remaining life of kit components 242
setting count of pages printed 249
setting maintenance interval 249
See also cleaning
malfunction error troubleshooting 330
manual feed settings 45, 49
manuals. *See* documentation
margins
on envelopes 18
registration settings for printing 46
mass storage devices. *See* DIMMs (dual inline memory modules); hard disk accessory
Material Safety Data Sheet (MSDS) 20
measurement guide for screws 134
media
checklist for troubleshooting 232
common causes of jams 297
fuser modes 47
fusing compatibility 19
guidelines 9, 14
jam detection 87
pickup and feed operation 78
print media guide for the HP LaserJet family of printers 367
setting default size 44
setting sizes in Paper Handling menu 42
setting type in Paper Handling Menu 42
size detection in cassettes 83
specifications. *See* specifications, media
supported types 14
tray selection 49
types to avoid 19
websites for ordering 362
weight equivalence table 15
See also paper
media-size sensor 399
media-size sensor cable, 1,500-sheet feeder 399
media-size sensor 221
memory
and EconoMode 128
auto-continue and clearable warning settings 129
expandability 3, 8
flash 128
insufficient 281
list of installed on configuration page 241
operation 129
part numbers 365
print cartridge 75, 126
product features 3
troubleshooting 285, 288, 292
memory cable 375
memory chip sensor 356
Memory Enhancement technology (MEt) 129
menu map. *See* control panel menu map
menus on control panel. *See* control panel menus
messages
access denied menus locked 40
alphabetical list 258
auto-continue 129
clearable warning 129
configuring alerts with EWS 244
configuring clearable warnings 50
control panel 257
critical error 257
error 257
generated from Printer Status and Alerts 245
jams in printer 87
numerical list 274
PowerSave 127
Printer Status and Alerts 245
status 257
warning 257
MEt (Memory Enhancement technology) 129
mirrors in laser/scanner operation 76, 121
model number for product 4
moisture content in media, print quality problems 306
monitoring
fuser temperature 71, 72
print cartridge conditions 75
print cartridge presence 75
toner levels 75
motors
connectors 356
duplex feed 99
envelope pickup 96
fan 70
feed roller, stacker 104
jogger, stapler/stacker 110, 346
lifter 70
lifter-drive 70, 337, 84
location 337
main 70, 177, 371
main drive 337
operation 70
order in which to remove 135
paddle, stapler/stacker 109
paper pickup system 78
print cartridge 70, 175, 337, 371
reversing motor, duplexer 99
rotation, speed, and failure detection 70
scanner 76
stacker 109, 346
staple module 114
stapler/stacker 107, 346
troubleshooting 289, 290
MSDS (Material Safety Data Sheet) 20
multipart forms 19
multiple feeding, preventing 84
multiple pages feeding 304
multipurpose tray. *See* tray 1

N

name plates 369
narrow media sensor 356
navigation buttons on control panel 36, 37
NetWare
information on HP Jetdirect page 256
settings 52
networks
configuring with embedded Web server 244
connections in printer configurations 3
controlling settings with EWS 244
EIO cards 365
passwords 244
settings 52
statistics on HP Jetdirect page 256
troubleshooting 255, 256
viewing status and changing configuration with EWS 243
See also HP Jetdirect print servers
new line setting 46
nonvolatile random-access memory. *See* NVRAM (nonvolatile random-access memory)
notifications, receiving from EWS 243

Download Free Service Manual at http://printer1.blogspot.com

Novell NetWare
information on HP Jetdirect page 256
settings 52
number of copies, setting default 44
NVRAM (nonvolatile random-access memory)
initialization 251
operation 129
troubleshooting 292, 293

O

off-set images, preventing with fluorine coating 124
online help at control panel 37
operating environment specifications 5
operating temperature specifications 8
optimizing resolution 47
options. *See* settings
order of removal 135
ordering
accessories and supplies 28, 364
documentation 28
parts and supplies 362
related documentation 362
related software 362
websites 362
orientation, setting default 45
out of toner 50
output bin full sensor
connector 356
location 336
output bins. *See* bins
output delivery assembly 386
location 333
order in which to remove 135
removing and replacing 163
output delivery operation 86
output quality. *See* print quality
overcurrent/overvoltage protection 75
overhead transparencies. *See* transparencies
override A4/letter 45

P

paddle home sensor, stapler/stacker 107
paddle mechanism and motor, stapler/stacker 346
paddle motor, stapler/stacker 107, 109
page orientation default 45
pages per minute (ppm) speed 8
panels. *See* covers
paper
common causes of jams 297
fuser modes 47
fusing compatibility 19
guidelines 9, 14
jam detection 87
override A4/letter setting 45
pickup and feed operation 78
print media guide for the HP LaserJet family of printers 367
setting default size 44
setting sizes in Paper Handling menu 42
setting type in Paper Handling Menu 42
size detection in cassettes 83
specifications. *See* specifications, media
supported types 14
tray selection 42, 49
types to avoid 19
websites for ordering 362
weight equivalence table 15
See also media
paper-deck driver PCA 94
paper delivery sensor
stacker 104, 105, 345
stapler/stacker 107, 345
paper delivery tray assembly, stacker and staple/stacker 403
paper-feed assembly
illustration and part number 383
location 332
order in which to remove 135
removing and replacing 195
paper-feed assembly clutch 383
paper-feed belt assembly 191, 377
paper feed clutch 356
paper-feed roller
cleaning 55
illustration and part number 364, 382
life expectancy 59
1,500-sheet feeder 397
paper-feed sensor 356
paper-feed sensor flag 371
paper-feeder driver
1,500-sheet feeder 92
500-sheet feeder 90
paper-feeder pickup solenoid 90
paper full sensor, stacker and stapler/stacker 345
paper-handling accessories 364
Paper Handling menu on control panel 42
paper handling power connector 356
paper inlet sensor
stacker 104, 105, 345
stapler/stacker 107, 345
paper input trays. *See* 500-sheet feeder; 1,500-sheet feeder; tray 1; tray 2; trays
paper output bins. *See* bins
paper path
jams 303
stacker test 327
stapler/stacker paper 328
test 248, 300
troubleshooting 295, 299
paper pickup and feed system operation 78
paper pickup arm 382
paper pickup arm holder 382
paper-pickup assembly
1,500-sheet feeder 402
order in which to remove 135
removing and replacing 183
illustration and part number 379
paper-pickup drive assembly
1,500-sheet feeder 225, 400
500-sheet feeder 210
printer 332
paper pickup rollers 364, 382
paper pickup sensor cable assembly 382
paper pickup solenoid
1,500-sheet feeder 343
500-sheet feeder 340
paper sensing flag 382, 393
paper sensor
1,500-sheet feeder 343
500-sheet feeder 340
paper sensor assembly, 1,500-sheet feeder 402
paper sensor holder 382
paper size sensing assembly 399
paper size sensor flag, 500-sheet feeder 396
paper size sensor, 1,500-sheet feeder 343
paper size switch
500-sheet feeder 340
printer 336

Download Free Service Manual at http://printer1.blogspot.com

paper stack position sensor
1,500-sheet feeder 343
500-sheet feeder 340
location 336
operation 84
paper stack sensor 382
paper transport errors 330
paper tray lifter 80
paper width sensor
location 336
operation 100
paper pickup assembly
printer 382
parallel interfaces
buffer overflow 281
operation 128
part numbers 365
settings 52
testing 255
part numbers
accessories and supplies 364
covers and panels 369
main assemblies 371
memory, fonts, and mass storage 365
printer maintenance kits 366
PartnerCare 29, 363
partners
HP Connect Online support website 362
HP Partner Care support 29
HP PartnerCare support 363
parts
diagrams and lists 368
location of main 332
order in which to remove 135
ordering 28, 362
recycling 24
removal tree diagram 135
removing and replacing. *See part name*
websites 28, 362
PartSurfer 362
passwords
control panel 241
network 244
Pause/Resume button 36, 37
PCAs
1,500-sheet feeder 343
500-sheet feeder 340
500-sheet feeder control PCA 393
beam detect (BD) 76
connectors 356
DC controller. *See* DC controller PCA
driver, stacker and stapler/stacker 347
feeder control, 1,500-sheet feeder 343, 399
laser driver 76, 77
LED, stacker and stapler/stacker 347
paper-deck driver 94
printer 338
scanner motor 76
stacker 103, 347
stacker driver 103, 104
stapler/stacker 347
stapler/stacker driver 106, 109
PCL (printer command language) 130
font list 41
setting as printer language 49
settings 45
PCL submenu on control panel 45
persistent jams 298
personalities
chosen one not available 258
list of installed on configuration page 241
settings 130
Phillips screws 134
phone support
during warranty period 363
worldwide 30
photosensitive drum
charging process 118, 120
cleaning process 118, 125
functional check 310
half self-test functional check 310
in print cartridges 73
operation 76
physical dimensions of printer 6
pickup-drive assembly, 1,500-sheet feeder 341
pickup gear assembly, 500-sheet feeder 339
pickup rollers
1,500-sheet feeder 402
cleaning 55
life expectancy 59
location 335
location, 500-sheet feeder 339
operation 78, 80, 84
pickup sensor 97
pickup solenoid 82
PIN codes for service 249
pitch for fonts, setting 45
PJL (printer job language) 130
plastics, use of in product 24
PML (printer management language) 130
portrait orientation, setting as default 45
postcards. *See* card stock
PostScript (PS). *See* PS (PostScript)
power
consumption 7, 24
not available 237
overcurrent/overvoltage protection 75
rating information 4
requirements 7
troubleshooting 236
troubleshooting checks 236
power on
bypassing disk load procedure 252
sequence for stapler and stapler/stacker 102
troubleshooting checks 236
power supply
assembly 377
connector 356
guide right side 376
illustration and part numbers 377
location 338
operation 71
order in which to remove 135
part numbers 366
removing and replacing 188
power supply ribbon cables, connectors 356
power supply shield 375
power switch
defective, troubleshooting 237
resistance 237
PowerSave
acoustic ratings 8
default activation time 7
description 247
operation 127
power consumption 7
setting time printer is idle before entering 49
turning on and off 247

Download Free Service Manual at http://printer1.blogspot.com

ppm (pages per minute) speed 8
pre-feed sensor
location 336
operation 78, 79, 82, 87, 90, 92, 97, 100
preferences. *See* settings
preprinted forms 14
preprinted paper
fuser modes 47
print quality problems 306
specifications 308
prepunched paper, user modes 47
pressure roller
operation 73
preventing toner from sticking 73
preventative maintenance. *See* maintenance
primary charging 120
primary charging biases 73
primary charging roller 73, 120
print cartridge motor
illustration and part number 371
location 337
operation 70
order in which to remove 135
removing and replacing 175
print cartridges
amount of toner available 242
checklist for troubleshooting 232
coverage rating 309
detection 75
error messages 258
estimated pages remaining 242
first and last use date 242
information on supplies status page 242
life expectancy 31
low or out 50
memory 75
memory chip 126
memory error 274
monitoring condition 75
non-HP detected 264
operation 75
order in which to remove 135
part number location on cartridge 242
part numbers 366
photosensitive drum 73, 76
recycling 31, 242
refilled 31
release arm 378
removing and replacing 137
returns 31
safety information 20
saving toner using EconoMode 48
serial number 242
toner detection 75
troubleshooting 309
viewing status with EWS 244
warranty statement 33
print density control
operation 122
setting 48
print jobs
cannot be stored 273
deleting using control panel Retrieve Job menu 41
deleting, pausing, and resuming using control panel 37
list of stored 41
number processed 242
retention 49
settings 38
status messages generated by Printer Status and Alerts 245
print quality
checklist 308
defect examples and solutions 311
environmental problems 307
problems associated with media 306
setting resolution 47
setting toner density 48
troubleshooting 306
Print Quality menu on control panel 46
print servers. *See* HP Jetdirect print servers
printer cabinet, locking 136
printer command language (PCL) 130
printer driver
print quality problems 306
settings 40
printer job language (PJL) 130
printer languages. *See* personalities
printer maintenance kits 366
printer management language (PML) 130
Printer Status and Alerts
selecting status messages 246
viewing status messages and information 246
Printer Status and Alerts software 245
printing
from 1,500-sheet feeder 92
from 500-sheet feeder 90
operation 80
Printing submenu on control panel 44
private jobs 41
processor types 128
product numbers. *See* part numbers
production code and number for product 4
proof of warranty 250
ProRes resolution, setting 47
protection
electrostatic discharge (ESD) 133
excessive fuser temperature 72
overcurrent/overvoltage 75
protocols, configuring 52
proxy server 243
PS (PostScript)
error page setting 45
font list 41
setting as printer language 49
punched paper, fuser modes 47

Q

quality. *See* print quality
quick copy jobs 41
settings 49

R

RAM (random-access memory) 129
device failure 266
disk full 266
disk settings 51
printer configurations 3
write protected 266
random-access memory. *See* RAM (random-access memory)
read/write timing, cartridge memory 75
read-only memory (ROM) 129
Ready light 36
rear output bin
removing and replacing 155
setting destination 44
See also bins
rear tray assembly, 500-sheet tray 396
reassembling parts. *See part name*

Download Free Service Manual at http://printer1.blogspot.com

recovery
automatic jam 296
settings for jam 50
recycling
print cartridges 31, 242
supplies 24
website 31
refilled print cartridges 31
reformatting printer hard disk 252
registration assembly
illustration and part number 384
operation 80, 82, 85, 90, 92
removing and replacing 198
registration roller assembly
gaining access to 135
location 333
order in which to remove 135
registration roller, cleaning 55
registration settings for printing 46
registration shutter 79, 85
regulatory information
Declarations of Conformity 26
FCC ii, 23
location on printer 4
relative humidity specifications 8
removal and replacement strategy 133
removing parts and assemblies
order in which to perform 135
order in which to remove 135
See also part name
repetitive defects 308, 318, 325
replacement intervals
components 59
print cartridges 31
replacement parts, ordering 28, 362
replacement strategy 133
replacing parts. *See part name*
resellers, authorized 29, 363
Resets menu in control panel 247
resistance, power 237
Resolution Enhancement technology (REt)
operation 127
setting at control panel 48
resolution setting 47
resource saving information on configuration page 241
restoring
default settings 247
factory defaults using cold reset 251
optimal resolution 47
service ID 250
REt (Resolution Enhancement technology)
operation 127
setting at control panel 48
retention, job
description 41
settings 49
Retrieve Job menu on control panel 41
returns, print cartridges and supplies 31
reversing motor, duplexer 99
revision level for product 4
revision numbers on configuration page 241
right-side cover 149, 160
right-side cooling fan 337
rollers
cleaning 55, 325
feed, 1,500-sheet feeder 342, 402
operation 78, 79, 86
order in which to removed 135
paper feed 82
paper feed, 1,500-sheet feeder 397
paper feed, 500-sheet feeder 393
paper pickup, 500-sheet feeder 393
pickup, 1,500-sheet feeder 342, 402
pressure 73
primary charging 73, 120
separation, 1,500-sheet feeder 342
separation, 500-sheet tray 396
transfer charging 73
tray 1 pickup 80
tray 2 feed 82
tray 2 pickup 82
tray 2 separation 82, 84
troubleshooting defects 325
ROM (read-only memory) 129
rotation functional check 310
rotation of motors 70
rough paper, fuser modes 47
ruler for repetitive defects 325

S

safety information
laser/scanner assembly 133
print cartridge, toner, and laser/scanner assembly 20
scanner cable 1 guide 373
scanner cable 2 guide 373
scanner mirrors in laser/scanner operation 76
scanner motor
operation 76
speed 121
scanner motor PCA 76
scanner PCA 356
scattered lines on images, troubleshooting 321
screws
measurement guide 134
used in printer 134
SDRAM DIMMs, part numbers 365
security
information on configuration page 241
setting in EWS 244
Select button 36, 37
self tests 252
self-test functional check 310
sensor cable assembly 393
sensor gear assembly, 1,500-sheet feeder 399
sensors
1,500-sheet feeder 343
500-sheet feeder 340
connectors 356
delivery roller disengaging sensor, stapler/stacker 345
door, 1,500-sheet feeder 343
envelope 96
envelope multiple feed 97
envelope size 96
face-down tray paper-full 100
fixing delivery, stacker 104
fixing delivery, stapler/stacker 109
fuser assembly delivery 336
fuser delivery 87, 100
jam detection 87
jams 100
jogger home position sensor, stapler/stacker 345
media-size, 1,500-sheet feeder 399
media size, 500-sheet feeder 208
narrow media 356
order in which to remove 135
output bin full 336
paper delivery sensor
stacker 105

Download Free Service Manual at http://printer1.blogspot.com

Sensors (continued)
paper delivery, stacker and stapler/stacker 345
paper inlet, stacker 105
paper inlet, stacker and stapler/stacker 345
paper size, 1,500-sheet feeder 343
paper stack 382
paper stack position 84, 94, 336
paper stack position, 1,500-sheet feeder 343
paper stack position, 500-sheet feeder 340
paper width 100, 336
paper, 1,500-sheet feeder 343
paper, 500-sheet feeder 340
pickup 97
pre-feed 78, 79, 82, 87, 90, 92, 97, 100, 336
printer 336
stacker 104
stacker and stapler/stacker 345
stapler/stacker 107
top bin-fill 375
top of page 87, 100, 336
tray 1 paper 80, 100, 336
tray 2 media size, removing and replacing 167
tray 2 paper 100, 336, 382
separation pads
cleaning 55
illustration and part number 364, 385
life expectancy 59
location 334
operation 80
order in which to remove 135
tray 1 140
separation rollers
1,500-sheet feeder 214, 342
500-sheet tray 396
cleaning 55
illustration and part number 364
life expectancies 59
location 335
location, 500-sheet feeder 339
operation 84
paper pickup and feed system 79
serial connectivity card 365
serial number
print cartridge 242
product, location on configuration page 241
product, location on equipment 4
product, resetting 251
product, updating for replaced formatter 249
servers. *See* HP Jetdirect print servers
service
agreements 29, 363
approach 28
before performing and after completing checklists 133
PIN codes 249
service ID
converting to an actual date 250
description 250
on configuration page 241
restoring 250
setting 249
Service menu on control panel 249
and cold reset 251
resetting values to factory defaults 251
service training kit 367
setting up alerts with EWS 244
settings
changing control panel 40
changing with EWS 244
configuring with EWS 244
isolating 130
restoring factory defaults 247
temporary 38
Settings tab, EWS 244
shading on printouts, troubleshooting 14
shifting margins for printing 46
short-circuit handling 75
site requirements 5
sizes
printer 6
setting for tray 1 42
supported for media 10
skew
causes 297
detection and correction 82, 85, 90, 92
troubleshooting 319
slots
DIMM 129
location of HP Jetdirect print server 52
setting for fonts 45
smeared images, troubleshooting 317, 320
smudged lines on images, troubleshooting 320
soft fonts, setting slot location 45
software
ordering related 362
Printer Status and Alerts 245
troubleshooting 29, 363
software CD-ROM
documentation contents 367
part numbers 367
solenoids
1,500-sheet feeder 343
500-sheet feeder 340, 393
clamp, stapler/stacker 111, 346
connectors 356
deflector 346
deflector, stacker 104
deflector, stapler/stacker 109
paper-feeder pickup 90
paper pick-up assembly 373
paper pickup, 1,500-sheet feeder 343
paper pickup, 500-sheet feeder 340
pickup 82
stacker 346
stapler/stacker 107, 346
tray 1 pickup 80, 385
tray 2 pickup 79
sound power level (SPL) ratings 8
space requirements 5
specifications, media
card stock 18
envelopes 17
for 1,500-sheet feeder 11
for 500-sheet feeder 11
for duplexer 12
for envelope feeder 12
for stacker or stapler/stacker 13
for tray 1 10
for tray 2 11
ink 14
labels 16
paper
specifications 9
paper weight equivalence table 15
supported sizes and weights 10
supported types 14
transparencies 16

Download Free Service Manual at http://printer1.blogspot.com

specifications, printer
environmental 5, 7
space requirements 5
temperature and humidity 8
specks or dots on images, troubleshooting 314
speed
and EconoMode 128
data transmission settings 52
dpi resolution settings 47
link for DLC/LLC 52
main motor 121
motors 70
pages per minute 8
scanner motor 121
spilled toner, cleaning 57
SPL (sound power level) ratings 8
stabilizing toner 124
stacker
capacity 13
cover 403
deflector solenoid 346
door open switch 345
driver PCA 347
feed mechanism and motor 346
jam detection 105
jam locations 295
jams 327
LED PCA 347
malfunction errors, troubleshooting 330
media specifications 13
motors, solenoid, sensors, and switch 104
operation 101, 103
paper delivery sensor 345
paper delivery tray assembly 403
paper full sensor 345
paper inlet sensor 345
paper path test 327
part number 364
PCAs 347
power on sequence 102, 103
sensors 345
staple module 404
switches, location 345
testing paper path 300
troubleshooting 291, 326
wiring diagram 354
stacker driver PCA 103, 104
stacker motor 109
stacker PCA 103
standby power consumption 7
staple arm 114
staple cam 107, 114
staple cartridges
loading 62
part number 364
settings 51
staple level detection 116
staple home position switch, stapler/stacker 107
staple module
stacker and stapler/stacker 404
staple level detection 116
staple module motor 114
staple presence switch, stapler/stacker 107
staple press head plates 114
staple-detection switch, staple module 116
stapler
and envelopes 17
behavior when out of staples 51
part number 364
product features 3
replacing 60
turning off and on 51
stapler motor 107
stapler/stacker
and envelopes 17
capacity 13
clamp solenoid 346
components 107
cover 403
delivery roller disengaging sensor 345
door open switch 345
driver PCA 347
feed mechanism and motor 346
jam detection 117
jam locations 295
jams 327
jogger home position sensor 345
jogger mechanism and motor 346
LED PCA 347
loading staples 62
location 344
malfunction errors, troubleshooting 330
media specifications 13
operation 101, 106
paddle mechanism and motor 346
paper delivery sensor 345
paper delivery tray assembly 403
paper full sensor 345
paper inlet sensor 345
paper path test 328
part number 364
PCAs 347
power on sequence 102, 106
product features 3
settings 51
staple module 404
switches 345
testing paper path 300
troubleshooting 291, 326
wiring diagram 355
stapler/stacker driver PCA 106, 109
Stapler/stacker menu on control panel 51
star washers 134
static eliminator teeth 123
status
from EWS 244
from Printer Status and Alerts 245
status and alerts software 243
status messages
configuring with EWS 244
on control panel 257
readback to computer 52
storage cabinet, part number 364
storage devices. *See* hard disk accessory
stored jobs
description 41
settings 49
storing
envelopes 18
print cartridges 20
subassemblies, replacing 28
subnet mask, configuring 52

Download Free Service Manual at http://printer1.blogspot.com

supplies
EWS status page 239
memory error 274
ordering 28, 362, 364
ordering with EWS 245
product, part, and exchange numbers 364
recycling 24
returns 31
status 244
status messages generated by Printer Status and Alerts 245
status page, from control panel 41
viewing status with EWS 243, 244
website 242
websites 362
supplies page, EWS 239
supplies status page 41
printing 242
using for troubleshooting 239, 242
support
HP-authorized resellers 363
links in EWS 245
service agreements 363
telephone 363
websites 28, 362
worldwide offices 30
swing plate assembly 376
switch boxes 255
switch rod 373
switches
1,500-sheet feeder 92
1,500-sheet feeder, location 343
500-sheet feeder 340
500-sheet tray 90
door open, stacker and stapler/stacker 345
fuser thermal 71
media size detection 83
paper size 336
paper size, 500-sheet feeder 340
power 237
printer 336
stacker 104
stacker and stapler/stacker 345
staple-detection, staple module 116
stapler/stacker 107
thermal 72
top cover 375
top cover open 336
switching
context-sensitive 130
I/O 130
symbol sets, selecting 46
syslog server, configuring 52
System Setup menu on control panel 49

T

TCP/IP
protocol information 256
settings 52
technical support. *See* support
technical training website 362
telephone support
during warranty period 363
worldwide 30
temperatures
fuser monitoring and protection 72
fusing 19
handling of abnormally high 71
maximum for printer 16
specifications 8
temporary settings 38
test pages
description 254
printing from control panel 46
tests
direct connect (parallel) communication 255
drum rotation functional check 310
engine 236, 254
formatter 254
half self-test functional check 310
paper path 248, 300
paper path, stacker 327
paper path, stapler/stacker 328
self 252
theory of operation 65
thermal switch 72
thermistor for fuser
monitoring voltage 72
operation 71
part number 375
thermistor holder 375
three-hole punched paper, fuser modes 47
timeouts
held jobs 49
I/O settings 52
idle 52
timing diagrams 357
tray 1 80
tray 2 82
timing, cartridge memory 75
Token Ring network cards 365
toner
adhesion, troubleshooting 14
application to photosensitive drum 118, 122
calculating usage 239
cleaning from clothing 20
cleaning process 118, 125
cleaning spilled 57
composition and behavior 122
conservation 128
consumption 24
estimates pages remaining for print cartridge 242
fusing to photosensitive drum 118, 124
handling and storing 20
loose in printer after clearing jams 295
loose on images, troubleshooting 317
low 50
monitoring levels 75
out 50
preventing from sticking to fuser pressure rollers 73
print density control 122
rejection 306
safety information 20
saving using EconoMode 48
setting density 48
smeared on images, troubleshooting 317
stabilizing 124
transfer to photosensitive drum 118, 123
waste compartment 125
toner cartridges. *See* print cartridges
tools
for removal and replacement 133
for troubleshooting 239
top cover
cable 375
removing 160
removing and replacing 146
switches 375
top cover open switch 336

Download Free Service Manual at http://printer1.blogspot.com

top cover sensor 356
top of page sensor 78, 87, 100
connector 356
location 336
top output bin
setting destination 44
See also bins
torque limiter, 500-sheet feeder 396
training
materials 367
website 362
transfer assembly 387
gaining access to 135
order in which to remove 135
removing and replacing 200
transfer charging roller
cleaning process 118, 125
operation 73
transfer DC negative bias 73
transfer DC positive bias 73
transfer roller
cleaning 54, 55
illustration and part number 371
life expectancy 59
location 334
order in which to remove 135
removing and replacing 138
transfer voltage bias 73
transferring process 118, 123
transparencies
fuser modes 47
print quality problems 306
specifications 10, 16
stapler/stacker support 13
stapling 16
troubleshooting 307
transport area errors 330
tray 1
components, life expectancies 59
illustration and part number 385
jam locations 295
jam operation 87
jams 301
operation 80
order in which to remove 135
pickup assembly 385
pickup solenoid 385
registration settings 46
removing and replacing 152
separation pad 80
separation pad, cleaning 55
setting behavior 49
setting default custom size 44
setting size 42
setting type in Paper Handling menu 42
timing diagrams 80
See also trays
tray 1 paper sensor
connector 356
location 336
operation 80, 100
tray 1 pickup assembly
location 333
removing and replacing 192
tray 1 pickup roller
illustration and part number 364, 385
location 334
operation 80
order in which to remove 135
removing and replacing 139
tray 1 pickup solenoid
connector 356
operation 80
tray 1 separation pad 140
tray 2
capacity 11
guides 375
jam locations 295
jam operation 87
jams 301
lifter-drive assembly 381
media size detection 83
media specifications 11
operation 82
registration settings 46
setting behavior 49
setting default custom size 44
timing diagrams 82
See also trays
tray 2 extension door 143
tray 2 feed roller
operation 82
order in which to remove 135
removing and replacing 141
tray 2 lifter-drive assembly
order in which to remove 135
removing and replacing 179
tray 2 lifter motor 356
tray 2 media-size sensor
connector 356
order in which to remove 135
removing and replacing 167
tray 2 media-size sensor assembly 376
tray 2 paper sensor
connector 356
illustration and part number 382
location 336
operation 100
tray 2 pickup assembly 135
tray 2 pickup roller 82
tray 2 pickup solenoid
connector 356
operation 79
tray 2 separation pad 135
tray 2 separation roller 82, 84
tray 3. *See* 500-sheet feeder; 1,500-sheet feeder
tray 4. *See* 500-sheet feeder; 1,500-sheet feeder
trays
checklist for troubleshooting 232
components, life expectancies 59
connectors 356
jam locations 295
jam operation 87
list of installed on configuration page 241
locking 136
media size detection 83
media specifications 10
operation 78
part numbers 364
product features 3
registration settings 46
setting behavior 49
setting media type and size in Paper Handling menu 42
settings information on configuration page 241
testing paper path 300
viewing and changing configuration with EWS 243

Download Free Service Manual at http://printer1.blogspot.com

troubleshooting
flowchart 234
software 29, 363
tools 239
using control panel information pages 239
using control panel messages 257
using drum rotation functional check 310
using event log 248
using half self-test functional check 310
using paper path test 248
See also messages
troubleshooting problem areas
buffer overflow 281
components 331
connection areas 328
control panel 236
DC controller 286
delivery areas 329
DIMMs 260
duplexer 258, 266, 274, 293
duplexer fan 287
EIO 255, 260, 282, 294
electrophotographic process 310
envelope feeder 258
fans 236, 237, 287
feeding problems 14
file operations 259
fuser 262, 280, 284
hard disk accessory 259
HP Jetdirect print servers 255
image formation 306
image quality 308
image system 310
interfaces 255
jams 87, 276, 277, 278, 279, 280, 295, 297, 298
malfunction errors 330
media 14
memory 285, 288, 292, 293
motors 289, 290
networks 255
paper path 295, 299
paper transport 330
paper transport (feeding) 304
power 236
power on sequence 236
print cartridges 258, 274, 309
print job s 273
print quality 14, 306
RAM 266
repetitive defects 325
stacker 326
stacker or stapler/stacker 291
stapler/stacker 326
toner adhesion 14
transparencies 307
two-sided printing. *See* duplexer
typefaces. *See* fonts

U

Ultra Precise cartridges. *See* print cartridges
UNIX carriage return setting 46
Up Arrow button 36, 37
usage page
using for troubleshooting and accounting purposes 239
viewing with EWS 244
USB connectivity card 365
user-replaceable parts 137

V

vacuuming toner 57
VCCI statement, Japan 21
vertical line spacing setting 45
vertical lines on images, troubleshooting 316
voids in images, troubleshooting 315
voltages
monitoring in fuser 71
requirements 8
supply and conversion 74

W

warnings
configuring 50
messages on control panel 257
warranty
proof 250
using service ID to verify 250
warranty statement
print cartridge 33
printer 32
washers 134
washing toner off clothing 20
waste toner compartment 125
wavy images, troubleshooting 319
websites
documentation 367
Energy Star 24
frequently asked questions 363
HP Connect Online 362
HP Customer Care Online 362
HP Partner Care 29, 363
HP PartSurfer 362
HP Technical Training 362
Material Safety Data Sheet (MSDS) 20
ordering parts 362
parts 28, 362
Print Media Guide for the HP LaserJet Family of Printers 367
printer software CD-ROM 367
recycling 31, 242
supplies 242, 362
technical support 28, 362
weight
equivalence table for paper 15
printer 7
supported for media 10
wheels on printer cabinet, locking 136
white lines on images, troubleshooting 320
white page printed, troubleshooting 323
white spots on images, troubleshooting 321
wide A4 setting 45
width of printer 6
wiring diagrams 348
worldwide service and support 30
wrinkled paper 304
write protected
disk 259
flash DIMM 260
RAM 266
writing images 121

Download Free Service Manual at http://printer1.blogspot.com

Download Free Service Manual at http://printer1.blogspot.com

invent

copyright © 2002
Hewlett-Packard Company

http://www.hp.com

Q2431-90912

Download Free Service Manual at http://printer1.blogspot.com